Brief introduction to maintenance handbook of HS250UTV-2/HS200UTV-2

The handbook is edited by Technical Center of Chongqing Huansong Science And Technology Industrial Co.,Ltd, and is supplied to dealers and technicians as document of technique.Mainly, the handbook gives methods to check, maintain and repair utility terrain vehicles （UTV）, and supplies some relevant technique and performance data. Some techniques and method inside may be used to check, maintain and repair other models of UTV, although it is mainly for HS250UTV-2/HS200UTV-2.

Please read the handbook through and fully understand it; otherwise, any improper repairing and amounting would bring you problems, and accident may occur in your use.

Proper use and maintenance can guarantee UTV being driven safely, reduce its malfunction, and help the vehicle remain its best performance.

The standards, performances and specifications mentioned in interpretation are based on the sample in design, and they are subject to changes according to the product’s improvement without prior notice.

First version ,October, 2014

Published by Chongqing Huansong Science And Technology Industrial Co.,Ltd

Chongqing Huansong Science And Technology Industrial Co.,Ltd holds the copy right.

No publishing and reprinting without permission.

CROSSFIRE

CONTENT

CHAPTER 1
GENERAL INFORMATION

CROSSFIRE

CROSSFIRE

CROSSFIRE

CROSSFIRE

CHAPTER 2
SPECIFICATIONS

CROSSFIRE

CHAPTER 3
MAINTENCE AND ADJUSTMENT OF THE UTV

CROSSFIRE

CHAPTER 4
ENGINE

CROSSFIRE

CHAPTER 5
CHASSIS

CROSSFIRE

CHAPTER 6
ELECTRICAL COMPONENTS

CHAPTER 7
ENGINE MANAGEMENT SYSTEM

CHAPTER 8
TROUBLESHOOTING

CROSSFIRE

CHAPTER 9
WIRING DIAGRAM

CROSSFIRE

CROSSFIRE

GENERAL INFORMATION

The text provides complete information on maintenance，tune-up repair and overhaul，Hundreds of photographs and illustrations created during the complete disassembly of four wheel utility terrain venires (UTV) guide the reader through every job，All procedures are in step-by-step format and designed for the reader who may be working on the UTV for the first time.

WARNINGS, CAUTIONS AND NOTES

The terms ***WARNING*, CAUTION** and **NOTE** have specific meaning in this manual.

WARNING: ***emphasizes areas where injury or even death could result from negligence. Mechanical damage may also occur. WARNINGS are to be taken seriously***

CAUTION: emphasizes areas where equipment damage could result. Disregarding a CAUTION could cause permanent mechanical damage. though injury is unlikely.

NOTE: provides additional information to make a step or procedure easier or clearer. Disregarding a NOTE could cause inconvenience. but would not cause equipment damage or injury.

CROSSFIRE

DESCRIPTION

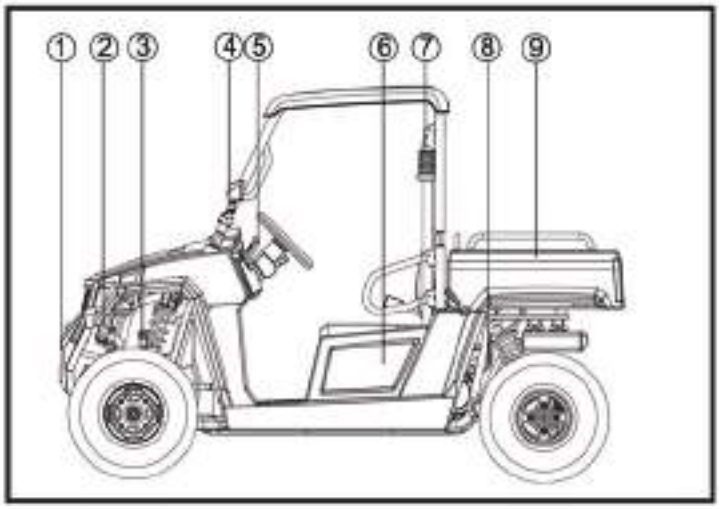

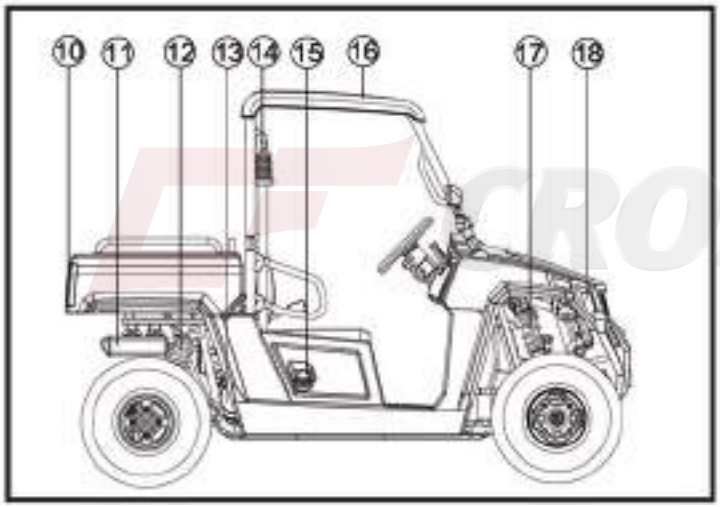

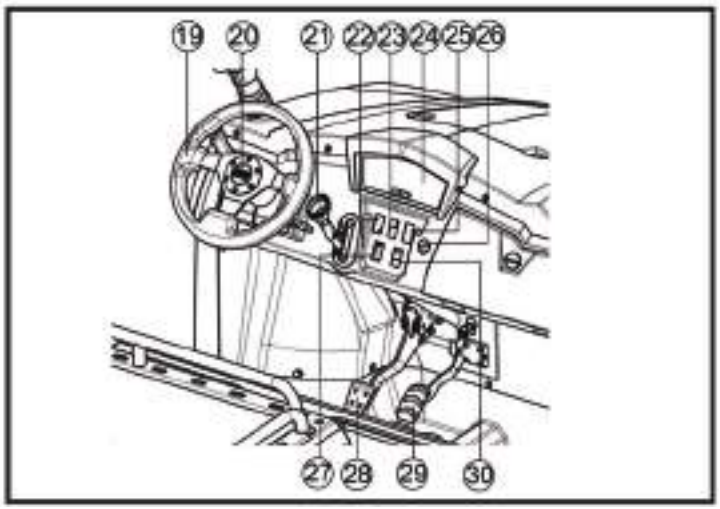

1. Front bumper assy.
2. Coolant reservoir
3. Hydraulic reservoir
4. Rear-view mirror
5. Parking brake lever
6. Battery
7. Driver seat belt
8. Air filter case (engine and air intake duct)
9. Cargo bed
10. Tail light/Rear turning lights
11. Muffler
12. Rear shock absorber
13. Engine
14. Passenger seat belt
15. Fuel tank cap
16. Car roof
17. Front shock absorber
18. Headlights
19. Steering wheel
20. Horn
21. Range gear shift lever
22. Headlights switch
23. Low(high) beam light
24. Speedmeter
25. Emergency light switch
26. DC-socket
27. Turn signal lights
28. Brake pedal
29. Accelerate pedal
30. Winch in /out

NOTE:

The vehicle you have purchased may differ slightly from those in the figures of this manual.

CROSSFIRE

IDENTIFICATION CODE

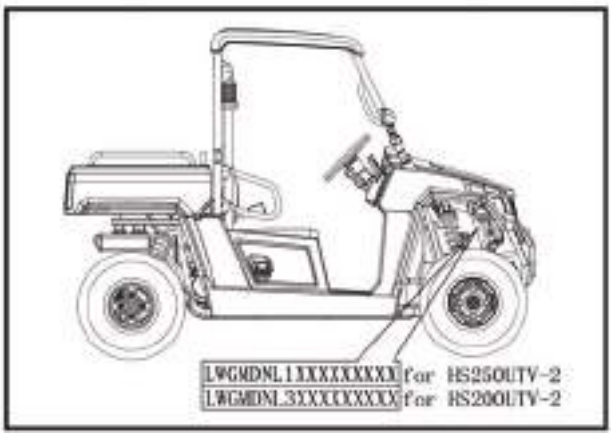

Frame No.

Frame No. is carved on the right side of front main frame

CROSSFIRE

Engine No.

Engine NO. Is carved on the right side of the engine, Figure.

SAFETY

Professional mechanics can work for years and never sustain a serous injury or mishap. Follow these guidelines and practice common sense to safely service the utility terrain venires

1. Do not operate the utility terrain venires in an enclosed area venires The exhaust gasses contain carbon monoxide. an odorless, colorless and tasteless poisonous gas. Carbon monoxide levels build quickly in small enclosed areas and can cause unconsciousness and death in a short time. Make sure to properly ventilate the work area or operate the UTV side
2. Never use gasoline or any extremely flammable liquid to clean parts. Refer to *cleaning parts and handling Gasoline Safely in this section*
3. Never smoke or use a torch in the vicinity of flammable liquids, such as gasoline or cleaning solvent.
4. If welding or brazing on the UTV the fuel tank to a safe distance at least 50ft.(15m) away.
5. Use the correct type and size of tools to avoid damaging fasteners.
6. Keep tools clean and in good condition. Replace or repair worn or damaged equipment.
7. When loosening a tight fastener, be guided by what would happen if the tool slips.
8. When replacing fasteners, make sure the new fasteners are the same size and strength as the original ones.
9. Keep the work area clean and organized.
10. Wear eye protection anytime the safety of the eyes is in question. This includes procedures that involve drilling, grinding, hammering, compressed air and chemicals.
11. Wear the correct clothing for the job. Tie up or cover long hair so it does not get caught in moving equipment.
12. Do not carry sharp tools in clothing pockets.
13. Always have an approved fire extinguisher available. Make sure it is rated for gasoline (Class B) and electrical (Class C) fires.
14. Do not use compressed air to clean clothes, the UTV or the work area. Debris may be blown into the eyes or skin. Never direct compressed air at anyone. Do not allow children to use or play with any compressed air equipment.
15. When using compressed air to dry rotating parts, hold the part so it does not rotate. Do not allow the force of the air to spin the part. The air jet is capable of rotating parts at extreme speed. The part may disintegrate of become damaged, causing serious injury.
16. Do not inhale the dust created by brake pad and clutch wear. These particles may contain asbestos. In addition, some types of insulating materials and gaskets may contain asbestos. Inhaling asbestos particles is hazardous to one's health.
17. Never work on the UTV while someone is working under it.

Handling Gasoline Safely

Gasoline is a volatile flammable liquid and is one of the most dangerous items in the shop. Because gasoline is used so often, many people forget it is hazardous. Only use gasoline as fuel for gasoline internal combustion engines. Keep in mind when working on the machine, gasoline is always present in the fuel tank fuel line throttle. To avoid a disastrous accident when working around the fuel system, carefully observe the following precautions:

1. Never use gasoline to clean parts. Refer to Cleaning Parts in this section.

2. When working of the fuel system, work outside or in a well-ventilated area.
3. Do not add fuel to the fuel tank or service the fuel system while the UTV is near open flames, sparks or where someone is smoking .Gasoline vapor is heavier than air, it collects in low areas and is more easily ignited than liquid gasoline.
4. Allow the engine to cool completely before working on any fuel system component.
5. Do not store gasoline in glass containers. If the glass breaks, a serious explosion of fire may occur.
6. Immediately wipe up spilled gasoline with rags. Store the rags in a metal container with a lid until they can be properly disposed of, or place them outside in a safe place for the fuel to evaporate.
7. Do not pour water onto a gasoline fire. Water spreads the fire and makes it more difficult to put out. Use a class B, BC or ABC fire extinguisher which are dedicated to extinguish the gasoline fire.
8. Always turn off the engine before refueling. Do not spill fuel onto the engine or exhaust system. Do not overfill the fuel tank. Leave an air space at the top of the tank to allow room for the fuel to expand due to temperature fluctuations.

Cleaning Parts

Cleaning parts is one of the more tedious and difficult service jobs performed in the home garage. Many types of chemical cleaners and solvents are available for shop use. Most are poisonous and extremely flammable. To prevent chemical exposure, vapor buildup, fire and serious injury, observe each product warning label and note the following:

1. Read and observe the entire product label before using any chemical. Always know what type of chemical is being used and whether it is poisonous and/or flammable.
2. Do not use more than one type of cleaning solvent at a time. If mixing chemicals is required, measure the proper amounts according to the manufacturer.
3. Work in a well-ventilated area.
4. Wear chemical-resistant gloves.
5. Wear safety glasses.
6. Wear a vapor respirator if the instructions call for it.
7. Wash hands and arms thoroughly after cleaning parts.
8. Keep chemical products away from children and pets.
9. Thoroughly clean all oil, grease and cleaner residue from any part that must be heated.
10. Use a nylon brush when cleaning parts. Metal brushes may cause a spark.
11. When using a parts washer, only use the solvent recommended by the manufacturer. Make sure the parts washer is equipped with a metal lid that will lower in case of fire.

Warning Labels

Most manufacturers attach information and warning labels to the UTV. These labels contain instructions that are important to personal safety when operating, servicing, transporting and storing the UTV. Refer to the owner’s manual for the description and location of labels. Order replacement labels from the dealers or manufacturer if they are missing or damaged.

SERIAL NUMBERS

Serial and identification numbers are stamped on various locations on the frame engine throttle body. Record these numbers in the Quick Reference Data section in the front of the manual. Have these numbers available when ordering parts.

FASTENERS

Proper fastener selection and installation is important to ensure the motorcycle operates as designed and can be serviced efficiently. The choice of original equipment fasteners is not arrived at by chance. Make sure replacement fasteners meet all the same requirements as the originals

Many screws. Bolts and studs are combined with nuts to secure particular components. to indicate the size of a nut. Manufactures specify the internal diameter and the thread pitch

The measurement across two flats on a nut or bolt indicates the wrench size

WARNING

Do not install fasteners with a strength classification lower than what was originally installed by the manufacturer doing so may cause equipment failure and or damage

Torque Specifications

CROSSFIRE

The material used in the manufacturing of the UTV may be subjected to uneven stresses if the fasteners of the various subassemblies are not installed and tightened correctly. Fasteners that are improperly installed or work loose can cause extensive damage. it is essential to use an accurate torque wrench as described in this chapter

Self-Locking Fasteners

Several types of bolts. Screws and nuts incorporate a system that creates interference between the two fasteners. Interference is achieved in various ways. The most common types are the nylon insert nut and a dry adhesive coating on the threads of a blot.

Self-locking fasteners offer greater holding strength than standard fasteners, which improves their resistance to vibration. All self-locking fasteners cannot be reused. The materials used to from the lock become distorted after the initial installation and removal. Discard and replace self-locking fasteners after removing them. Do not replace self-locking fasteners with standard fasteners.

Washers

The two basic types of washers are flat washers and lock washers. Flat washers are simple discs with a hole to fit a screw or bolt. Lock washers are used to prevent a fastener from working loose. Washers can be used as spacers and seals. Or can help distribute fastener load and prevent the fastener from damaging the component

As with fasteners. When replacing washers make sure the replacement washers are of the same design and quality

Cotter Pins

A cotter pin is a split metal pin inserted into a hole or slot to prevent a fastener from loosening. In certain applications, such as the rear axle on an UTV or motorcycle, the fastener must be secured in this way. For these applications. A cotter pin and castellated (slotted) nut is used.

To use a cotter pin, first make sure the diameter is correct for the hole in the fastener. Aster correctly tightening the fastener and aligning the holes, insert the cotter pin through the hole and bend the ends over the fastener, Unless instructed to do so, never loosen a tightened fastener to align the holes. If the holes do not align. Tighten the fastener enough to achieve alignment

Cotter pins are available in various diameters and lengths. Measure the length from the bottom of the head to the tip of the shortest pin

Snap Rings and E-clips

Snap rings (**Figure 1**) are circular-shaped metal retaining clips. They secure parts in place on parts such as shafts. External type snap rings are used to retain items on shafts. Internal type snap rings secure parts within housing bores. In some applications. in addition to securing the component(s). snap rings of varying thicknesses also determine endplay. These are usually called selective snap rings.

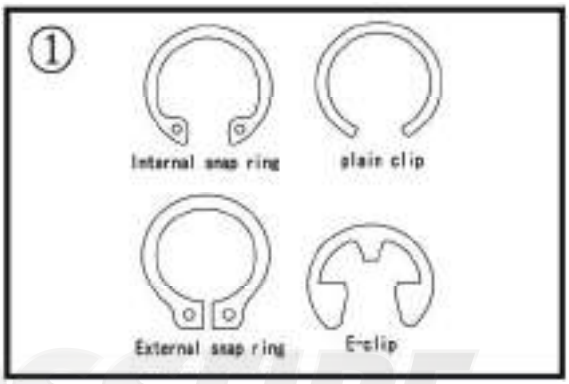

The two basic types of snap rings are machined and stamped snap rings. Machined snap rings (**Figure 2**) can be installed in either direction. Because both faces have sharp edges. Stamped snap rings (**Figure 3**) are manufactured with a sharp and a round edge. When installing a stamped snap ring in a thrust application, install the sharp edge facing away from the part producing the thrust.

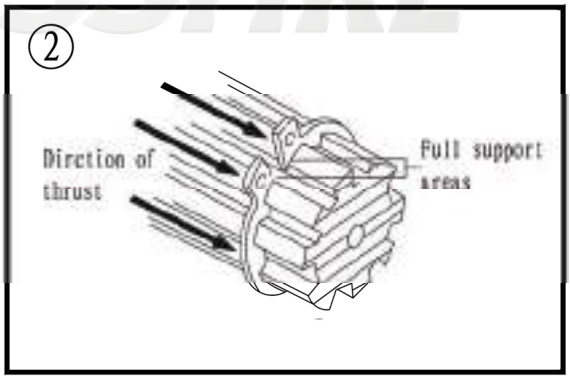

E-clips are used when it is not practical to use a snap ring. Remove E-clips with a flat blade screwdriver by prying between the shaft and E-clip. To install an E-clip. Center it over the shaft groove and push or tap it into place

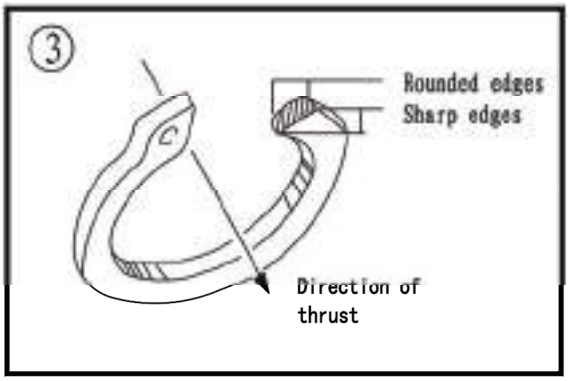

Observe the following when installing snap rings:

1. Remove and install snap rings with snap rings pliers. Refer to *Basic Tools* in this chapter
2. In some applications. it may be necessary to replace snap rings after removing them
3. Compress or expand snap rings only enough to install them. If overly expanded. Lose their retaining ability
4. After installing a snap ring. Make sure it seats completely
5. Wear eye protection when removing and installing snap rings

SHOP SIPPLIES

Lubricants and Fluids

Periodic lubrication help ensure a long service life for any type of equipment. Using the correct type of lubricant is as important as performing the lubrication service. Although in an emergency the wrong type is better than not using one, The following section describes the types of lubricants most often required. Make sure to follow the manufacturer's recommendations for lubricant types

Engine oils

Engine oil for four-stroke the UTV engine use is classified by two standards: the American Petroleum Institute (API) service classification. The Society of Automotive Engineers (SAE) viscosity rating Standard classification

The API and SAE information is on all oil container labels. Two letters indicate the API service classification. The number or sequence of numbers and letter (10W-40SG for example) is the oil's viscosity rating. The API service classification and the SAE viscosity index are not indications of oil quality.

The APL service classification standards, The first letter in the classification S indicates that the oil is for gasoline engines. The second letter indicates the standard the oil satisfies .
The classifications are: MA (high friction applications) and MB(low frication applications).

CROSSFIRE

NOTE

Refer to Engine Oil and Filter in Chapter Three for further information on API, SAE classifications.

Always use an oil with a classification recommended by the manufacturer, Using an oil with a different classification can cause engine damage.
Viscosity is an indication of the oil's thickness. Thin oils have a lower number while thick oil have a higher number. Engine oils fall into the 5-to50-weight range for single-grade oils.

Most manufactures recommend multi-grade oil. These oils perform efficiently across a wide range of operating conditions. Multi-grade oils are identified by a W after the first number, which indicates the low-temperature viscosity.

Engine oils are most commonly mineral (petroleum) based, but synthetic and semi-synthetic types are used more frequently. When selecting engine oil, follow the manufacturer's recommendation for type, classification and viscosity.

Greases

Grease is lubricating oil with thickening agents added to it. The National Lubricating Grease Institute (NLGI) grades grease. Grades range from No.000 to No.6, with No.6 being the thickest. Typical multipurpose grease is NLGI No.2. For specific applications, manufacturers may recommend water-resistant type grease or one with an additive such as molybdenum disulfide (MoS_2).

Brake fluid

Brake fluid is the hydraulic fluid used to transmit hydraulic pressure (force) to the wheel brakes. Brake fluid is classified by the Department of Transportation (DOT). Current designations for brake fluid are DOT 3, DOT 4 and DOT 5, this classification appears on the fluid container.

Each type of brake fluid has its own definite characteristics. Do not intermix different types of brake fluid as this may cause brake system failure. DOT 5 brake fluid is silicone based. DOT 5 is not compatible with other brake fluids may cause brake system failure. When adding brake fluid, only use the fluid recommended by the manufacturer.

Brake fluid will damage any plastic, painted or plated surface it contacts. Use extreme care when working with brake fluid and remove any spills immediately with soap and water.

Hydraulic brake systems require clean and moisture free brake fluid. Never reuse brake fluid. Keep containers and reservoirs properly sealed.

WARNING

Never put a mineral-based (Petroleum) oil into the brake system. Mineral oil causes rubber parts in the system to causing complete brake failure.

Coolant

Coolant is a mixture of water and antifreeze used to dissipate engine heat. Ethylene glycol is the most common from of antifreeze. Check the UTV Manufacturer's recommendations when selecting antifreeze. Most require one specifically designed for aluminum engines. There types of antifreeze have additives that inhibit corrosion.

Only mix antifreeze with distilled water. Impurities in tap water may damage internal cooling system passages.

Cleaners, Degreasers and Solvents

Many chemicals are available to remove oil, grease and other residue from the UTV. Before using cleaning solvents, consider how they will be used and disposed of , particularly if they are not water-soluble. Local ordinances may types of cleaning chemicals. Refer to Safer in this chapter.

Use brake parts cleaner to brake system components. Brake parts cleaner leaves no residue. Use electrical contact cleaner is a powerful solvent used to remove fuel deposits and varnish from fuel system components. Use this cleaner carefully, as it may damage finishes.

Most solvents are designed to be used with a parts washing cabinet for individual component cleaning. For safety, use only nonflammable or high flash point solvents.

Gasket Sealant

Sealant is used in combination with a gasket or seal. In other applications, such as between crankcase halves, only a sealant is used. Follow the manufacturer's recommendation when using a sealant. Use extreme care when choosing a sealant different sealant based on its resistance to heat, various fluids and its sealing capabilities.

Gasket Remover

Aerosol gaskets remover can help remove stubborn gasket. This product can speed up the removal process and prevent damage to the mating surface that may be caused by using a scraping tool. Most of these types of products are very caustic. Follow the gasket remover manufacturer's instructions for use.

Thread locking Compound

A thread locking compound is a fluid applied to the threads of fasteners. After tightening the fastener, the fluid dries and becomes a solid filler between the threads. This makes it difficult for the fastener to work loose from vibration or hear expansion and contraction. Some thread locking compound sparingly. Excess fluid can run into adjoining parts.

CAUTION

Thread locking compounds are anaerobic and will stress, crack and attack most plastics. Use caution when using these products in areas where there are plastic components.

Thread locking compounds are available in a wide range of compounds for various strength, temperature and repair applications. Follow the manufacturer's recommendations regarding compound selection.

CROSSFIRE

BASIC TOOLS

Most of the procedures in this manual can be carried out with basic hand tools and test equipment familiar to the home mechanic. Always use the correct tools for the job. Keep tools organized and clean. Store them in a tool chest with related tools organized together.

Quality tools are essential. The best are constructed of high-strength alloy steel. These tools are light, easy to use and resistant to wear. Their working surface is devoid of sharp edges and carefully polished. They have an easy-to-clean finish and are comfortable to use. Quality tools are a good investment.

Some of the procedures in this manual specify special tools. In many cases the tools is illustrated in use. Those with a large tool kit may be able to replacement. However, in some cases, the specialized equipment or expertise may make it impractical for the home mechanic to attempt the procedure. When necessary, such operations are recommended to have a dealership or specialist perform the task. It may be less expensive to have a professional perform these jobs, especially when considering the cost of equipment.

When purchasing tools to perform the procedures covered in this manual, consider the tool's potential frequency of use. If a tool kit is just now being started. Consider purchasing a basic tool set from a quality tool combinations and offer substantial savings when complicated, specialized tools can be added.

Screwdrivers

Screwdrivers of various lengths and types are mandatory for the simplest tool kit. The two basic types are the slotted tip (flat blade) and the Phillips tip. These are available in sets that often include an assortment of tip size and shaft lengths.

As with all tools, use a screwdriver designed for the job. Make sure the size of the fastener. Use them only for driving screws. Never use a screwdriver for prying or chiseling metal. Repair or replace worn or damaged screwdrivers. A worn tip may damage the fastener, making it difficult to remove.

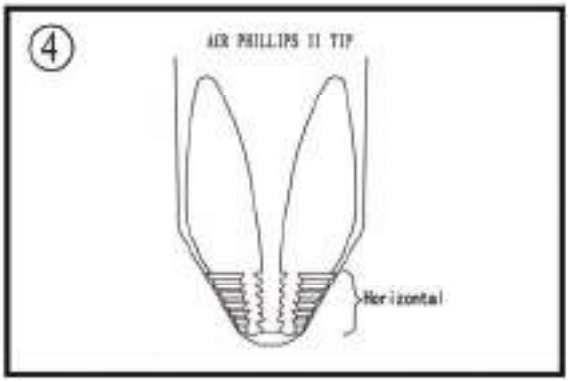

Phillips-head screws are often damaged by incorrectly fitting screwdrivers. Quality Phillips screwdrivers are manufactured with their crosshead tip machined to Phillips Screw Company specifications. Poor quality or damaged Phillips screwdrivers can back out (cam out) and round over the screw head. In addition. Weak or soft screw materials can make removal difficult.

The best type of screwdriver to use on Phillips screw is the ACR Phillips II screwdriver, patented by the horizontal anti-cam out ribs found on the driving faces or flutes of the screwdriver's tip (**figure 4**). ACR Phillips II screwdrivers were designed as part of a manufacturing drive system to be used with ACR Phillips II screws, but they work of tool companies offer ACR Phillips II screwdrivers in different Tip size and interchangeable bits to fit screwdriver bit holders.

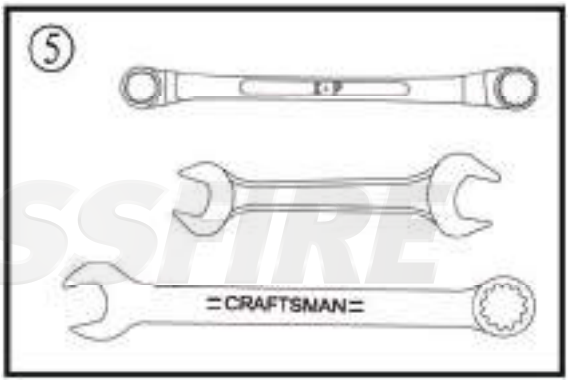

CROSSFIRE

NOTE

Another way to prevent cam out and to increase the grip of a Phillips screwdriver is to apply valve grinding compound or permute screw & socket Gripper onto the screwdriver tip.After loosening/tightening the screw, clean the screw recess to prevent engine oil contamination.

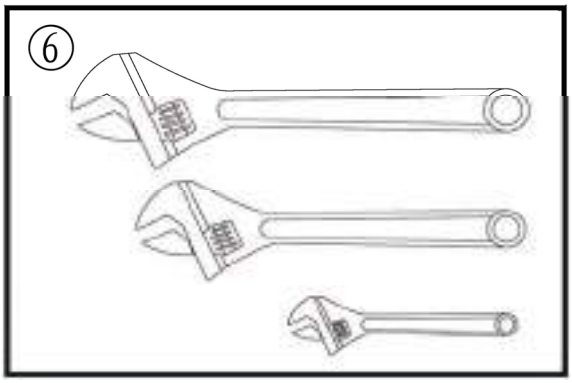

Wrenches

Open-end, box-end and combination wrenches (**figure 5**) are available in a variety of types and sizes.

The number stamped on the wrench refers to the distance of the fastener head.

The box-end wrench is an excellent tool because it grips the fastener on all sides. This reduces the chance of the tool slipping. The box-end wrench is designed with either a 6 or 12-point opening. For stubborn or damaged fasteners, the 6-point provides superior holding because it contacts the fastener across a wider area at all six edges. For general use, the 12-point works well. It allows the wrench to be removed and reinstalled without moving the handle over such a wide are.

An open-end wrench is fast and works best in areas with limited overhead access. It contacts the fastener at only two points and is subject to slipping if under heavy force, or if the tool or fastener is worn. A box-end wrench is preferred in most instances, especially when braking loose and applying the final tightness to a fastener.

The combination wrench has a box-end on one end and an open-end on one end and an open-end on the other. This combination makes it a convenient tool.

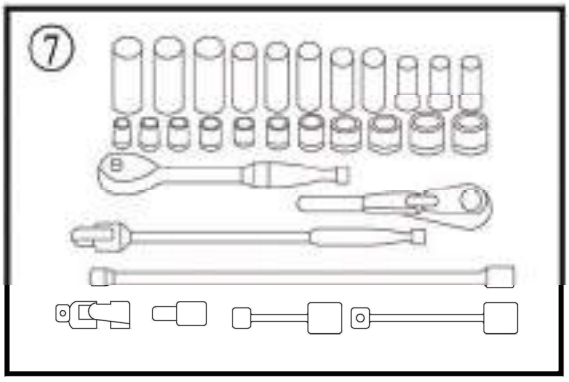

Adjustable wrenches

An adjustable wrench or Crescent wrench (**Figure 6**) can fit nearly any nut or bolt head that has clear access around its entire perimeter. An adjustable wrench is best used as a backup wrench to keep a large nut or bolt from turning while the other end is being loosened or tightened with a box-end or socket wrench.

Adjustable wrenches contact the fastener at only two points, which makes them more subject to slipping off the fastener. Because one jaw is adjustable and may become loose, this shortcoming is aggravated. Make certain the solid jaw is the one transmitting the force.

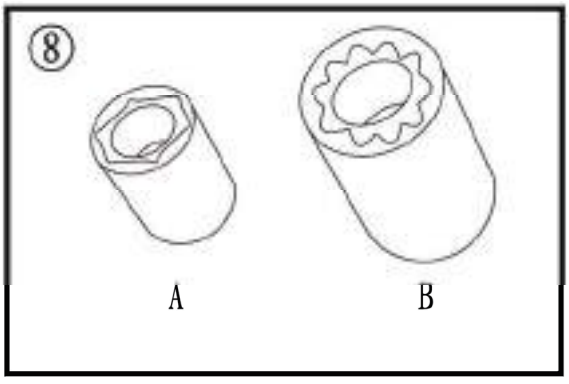

CROSSFIRE

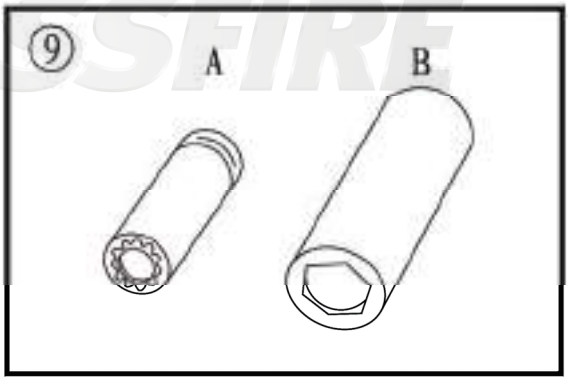

Socket Wrenches, Ratchets and Handles

Sockets that attach to a ratchet handle (**Figure 7**) are available with 6-point or 12-point openings (**Figure 8**) and different drive sizes. The drive size indicates the size of the square hole that accepts the ratchet handle. The number stamped on the socket is the size of the work area and must the fastener head

As with wrenches. a 6-point provides superior-holding ability. While a 12-point socket needs to be moved only half as for to reposition it on the fastener

Sockets are designated for either hand or impact use. Impact sockets are made of thicker material for more durability. Compare the size and wall thickness of a 19-mmhand socket (A, **Figure 9**) and the 19-mm impact socket (B). Use impact sockets when using an impact driver or air tools. Use hand sockets with hand-driven attachments

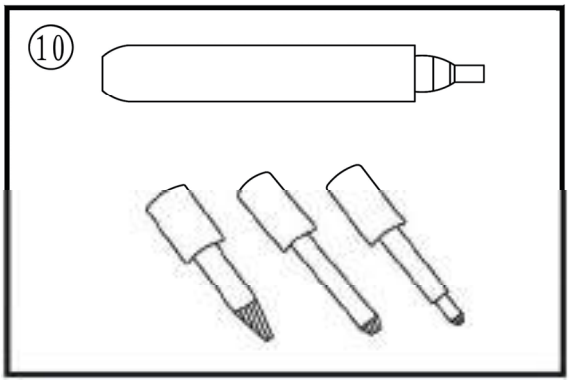

WARNING

Do not use hand sockets with air or impact tools because they may shatter and cause injury. Always wear eye protection when using impact or air tools

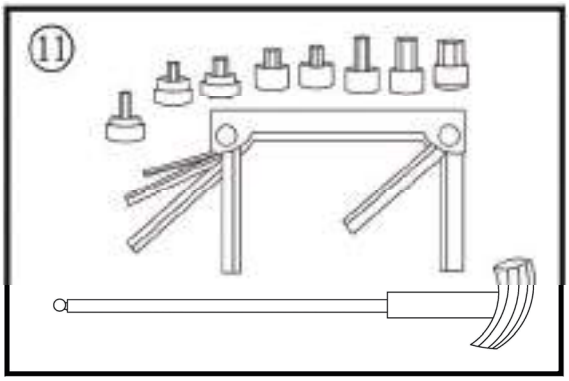

Various handles are available for sockets. Use the speed handle for fast operation. Flexible ratchet heads in varying length allow the socket to be turned with varying force and at odd angles. Extension bars allow the socket setup to reach difficult areas. The ratchet is the most versatile. It allows the user to install or remove the nut without removing the socket

Sockets combined with any number of drivers make them undoubtedly the fastest. Safest and most convenient tool for fastener removal and installation

Impact Drivers

An impact driver provides extra force for removing fasteners by converting the impact of a hammer into a turning motion. This makes it possible to remove stubborn fasteners without damaging them. Impact drivers and interchangeable bits (**Figure 10**) are available from most tool suppliers. When using a socket with an impact driver. Make sure the socket is designed for impact use. Refer to *Socket Wrenches. Ratchets and handles* in this section.

CROSSFIRE

WARNING

Do not use hand sockets with air or impact tools because they may shatter and cause injury. Always wear eye protection when using impact or air tools

Allen Wrenches

Use Allen or setscrew wrenches (**Figure 11**) on fasteners with hexagonal recesses in the fastener head. These wrenches are available in L-shaped bar. Socket and T-handle types. A metric set is required when working on most motorcycles. Allen bolts are sometimes called socket bolts.

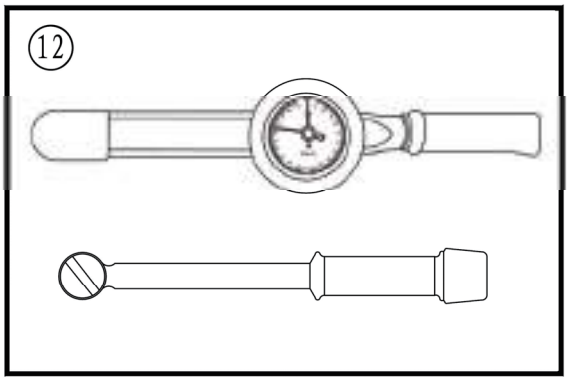

Torque Wrenches

Use a torque wrench with a socket, torque adapter or similar extension to tighten a fastener to a measured torque. Torque wrenches come in several drive sizes (1/4, 3/8, 1/2 and 3/4) and have various methods of reading the torque value. The drive size indicates the size of the square drive that accepts the socket, adapter or extension. Common methods of reading the torque value are the

deflecting beam, the dial indicator and the audible click (**Figure 12**).

When choosing a torque wrench, consider the torque range, drive size and accuracy. The torque specifications in this manual provide an indication of the range required.

A torque wrench is a precision tool that must be properly cared for to remain accurate. Store torque wrenches in cases or separate padded drawers within a toolbox. Please refer to the followed manufacturer's instructions for their care and calibration.

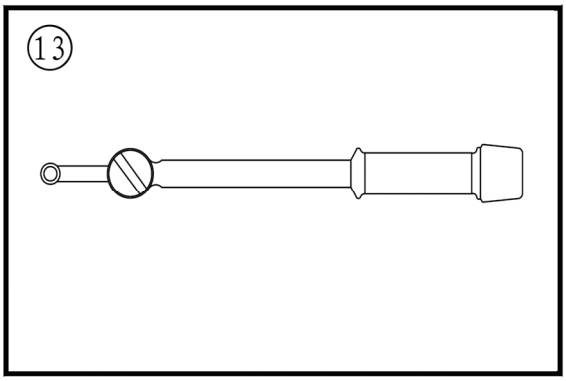

Torque Adapters

Torque adapters or extensions extend or reduce the reach of a torque wrench. The torque adapter shown in (**Figure 13**) is used to tighten a fastener that cannot be reached because of the size of the torque wrench head, drive, and socket. If a torque adapter changes the effective lever length (**Figure 14**), the torque reading on the wrench will not equal the actual torque applied to the fastener. It is necessary to recalibrate the torque setting on the wrench to compensate for the change of lever length. When using a torque adapter at a right angle to the drive head, calibration is not required, because the effective length has not changed.

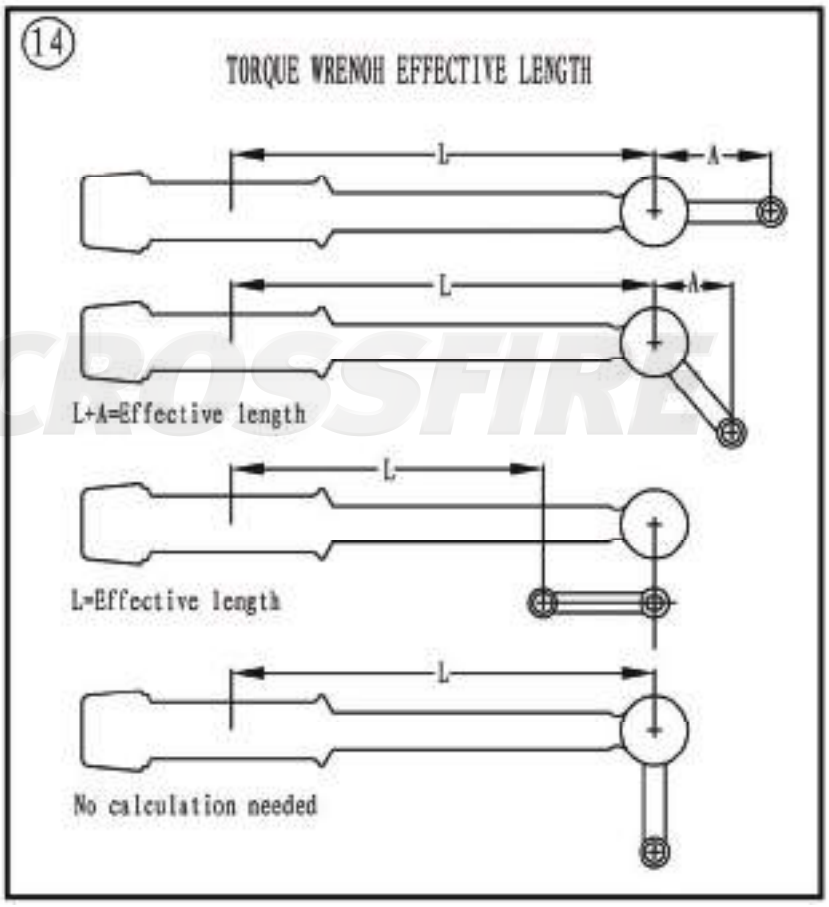

To recalculate a torque reading when using a torque adapter, use the following formula and refer to **Figure 14:**

$$TW = \frac{TA \times L}{L+A}$$

TW is the torque setting or dial reading on the wrench.

TA is the torque specification and the actual amount of torque that is applied to the fastener.

A is the amount that the adapter increases (or in some cases reduces) the effective lever length as measured along the centerline of the torque wrench.

L is the lever length of the wrench as measured from the center of the drive to the center of the grip.

The effective length is the sum of L and A.

Example:

TA=20 ft.-lb.
A=3in.
L=14in.

$$TW=\frac{20\times14}{14+3}=\frac{280}{17}=16.5 \text{ ft. - lb.}$$

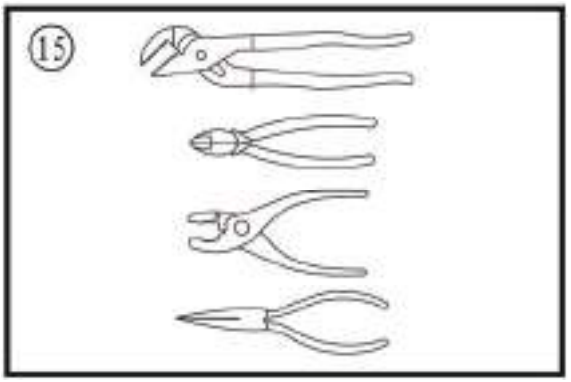

In this example, the torque wrench would be set to the recalculated torque value (TW = 16.5 ft. –lb.). When using a beam-type wrench, tighten the fastener until the pointer aligns with 16.5 ft. –lb. In this example, although the torque wrench is pre set to 16.5 ft. –lb., the actual torque is 20 ft. –lb.

Pliers

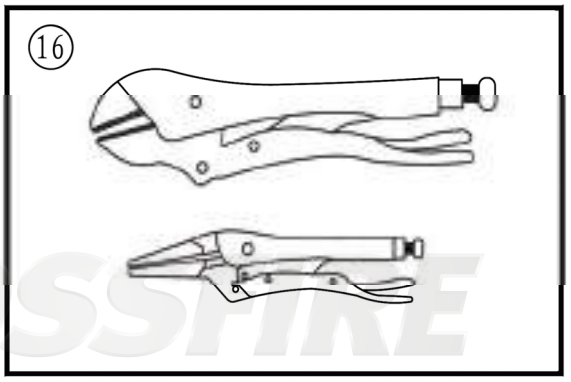

Pliers come in a wide range of types and sizes. Pliers are useful for holding, cutting, bending, and crimping. Do not use them to turn fasteners. **Figure 15 and Figure 16** show several types of useful pliers. Each design has a specialized function. Slip-joint pliers are general – purpose pliers used for gripping and bending. Diagonal cutting pliers are needed to cut wire and can be used to remove cotter pins. Use needle nose pliers to hold or bend small objects. Locking pliers (**Figure 16**), sometimes called Vise-Grips, are used to hold objects very tightly. They have many uses ranging from holding two parts together, to gripping the end of a broken stud. Use caution when using locking pliers, as the sharp jaws will damage the objects they hold.

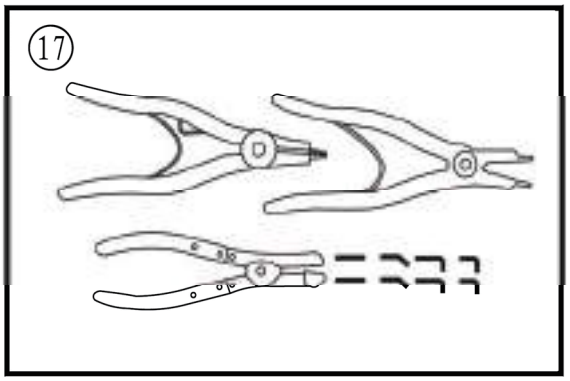

Snap Ring Pliers

Snap ring pliers are specialized pliers with tips that fit into the ends of snap rings to remove and install them.

Snap ring pliers (**Figure 17**) are available with a fixed action (either internal or external) or convertible (one tool works on both internal and external snap rings). They may have fixed tips or interchangeable ones of various sizes and angles. For general use, select a convertible type pliers with interchangeable tips (**Figure 17**).

WARNING

Snap rings can slip and fly off when removing and installing them. Also, the snap ring pliers tips may break. Always wear eye protection when using snap ring pliers.

Hammers

Various types of hammers are available to fit a number of applications. Use a ball-peen hammer to strike another tool, such as a punch or chisel. Use soft-faced hammers when a metal object must be struck without damaging it. Never use a metal-faced hammer on engine and suspension components because damage occurs in most cases.

Always wear eye protection when using hammers. Make sure the hammer face is in good condition and the handle is not cracked. Select the correct hammer for the job and make sure to strike the object squarely. Do not use the handle or the side of the hammer to strike an object.

Ignition Grounding Tool

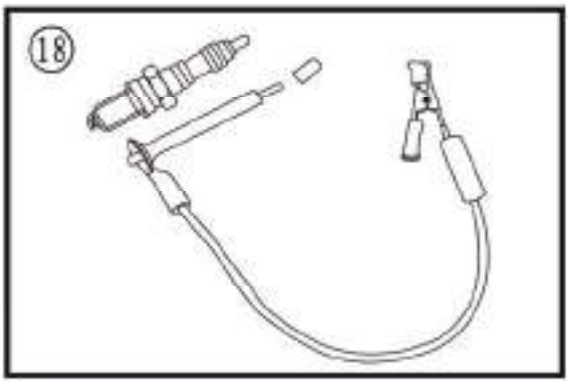

Some test procedures require turning the engine over without starting it. To prevent damage to the ignition system from excessive resistance or the possibility of fuel vapor being ignited by an open spark, remove the spark plug cap and ground it directly to a good engine ground with the tool shown in (**Figure 18**).

Make the tool shown from a No.6 screw and nut, two washers, length of tubing, alligator clip, electrical eyelet and a length of wire.

CROSSFIRE

PRECISION MEASURING TOOLS

The ability to accurately measure components is essential to perform many of the procedures described in this manual. Equipment is manufactured to close tolerances, and obtaining consistently accurate measurements is essential to determine which components require replacement or further service.

Each type of measuring instrument is designed to measure a dimension with a certain degree of accuracy and within a certain range. When selecting the measuring tool, make sure it is applicable to the task.

As with all tools, measuring tools provide the best results if cared for properly. Improper use can damage the tool and cause inaccurate results. If any measurement is questionable, verify the measurement using another tool. A standard gauge is usually provided with micrometers to check accuracy and calibrate the tool if necessary.

Precision measurements can vary according to the experience of the person performing the procedure. Accurate results are only possible if the mechanic possesses a feel for using the tool. Heavy-handed use of measuring tools produces less accurate results. Hold the tool gently by the fingertips to easily feel the point at which the tool contacts the object. This feel for the equipment produces more accurate measurements and reduces the risk of damaging the tool or component. Refer to the following sections for specific measuring tools.

Feeler Gauge

Use feeler or thickness gauges (**Figure19**) for measuring the distance between two surfaces.

A feeler gauge set consists of an assortment of steel strips of graduated thickness. Each blade is marked with its thickness. Blades can be of various lengths and angles for different procedures.

A common use for a feeler gauge is to measure valve clearance. Use wire (round) type gauges to measure spark plug gap.

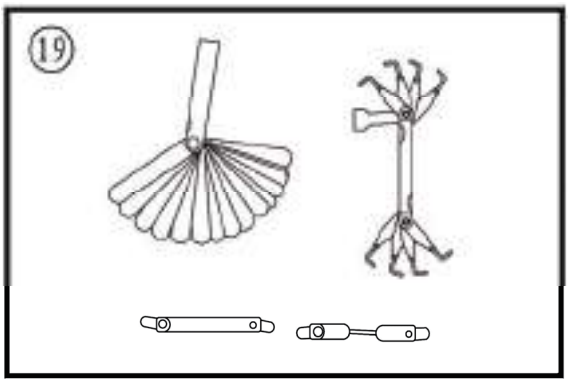

Calipers

Calipers (**Figure 20**) are excellent tools for obtaining inside, outside and depth measurements. Although not as precise as a micrometer, they allow reasonable precision, typically to within 0.02mm or 0.05 mm (0.001 in.). Most calipers have a range up to 150 mm (6 in.).

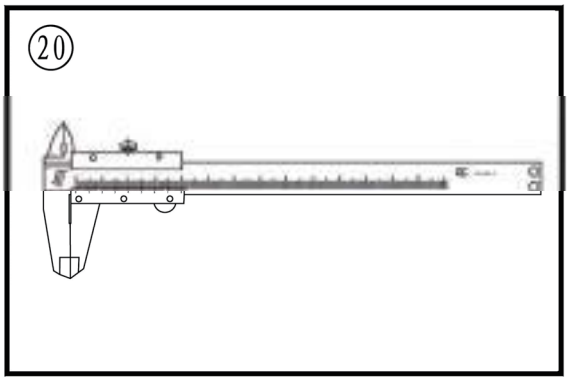

Calipers are available in dial, venire or digital versions. Dial calipers have a dial readout that provides convenient reading. Venire calipers have marked scales that must be compared to determine the measurement. The digital caliper uses a liquid-crystal display (LCD) to show the measurement.

CROSSFIRE

Properly maintain the measuring surfaces of the caliper. There must not be any dirt or burrs between the tool and the object being measured. Never force the caliper to close around an object. Close the caliper around the highest point so it can be removed with a slight drag. Some calipers require calibration. Always refer to the manufacturer's instructions when using a new or unfamiliar caliper.

To read a vernire. Calipers refer to **Figure 21**. The fixed scale is marked in l-mm increments. Ten individual lines on the fixed scale equal 1 cm. The movable scale is marked in 0.05 mm (hundredth) increments. To obtain a reading, establish the first number by the location of the 0 line on the movable scale in relation to the first line to the left on the fixed scale. In this example, the number is 10 mm. To determine the next number, note which of the lines on the movable scale align with a mark on the fixed scale. A number of lines will seem close, but only one will align exactly. In this case, 0.50 mm is the reading to add to the first number. Adding 10 mm and 0.50 mm equals a measurement of 10.50 mm.

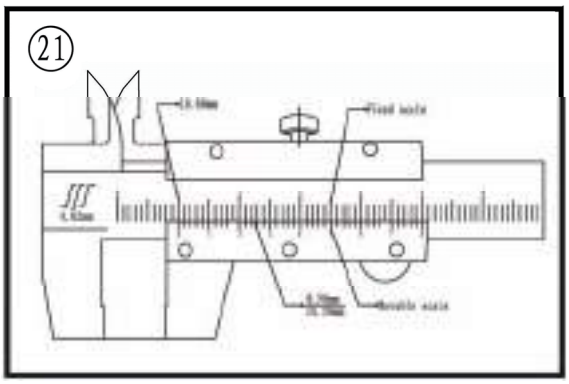

Micrometers

A micrometer is an instrument designed for linear measurement using the decimal divisions of the inch or meter (**Figure 22**). While there are many types and styles of micrometers, most of the

22

DECIMAL PLACE VALUES*

0.1	Indicates 1/10 (one tenth of an inch or millimeter)
0.01	Indicates 1/100 (one one-hundredth of an inch or millimeter)
0.001	Indicates 1/1000 (one one-thousandth of an inch or millimeter)

*This chart represents the values of figures placed to the right of the decimal point. Use it when reading decimals from one-tenth to one one-thousandth of an inch or millimeter. It is not a conversion chart (for example: 0.001 in. is not equal to 0.001 mm).

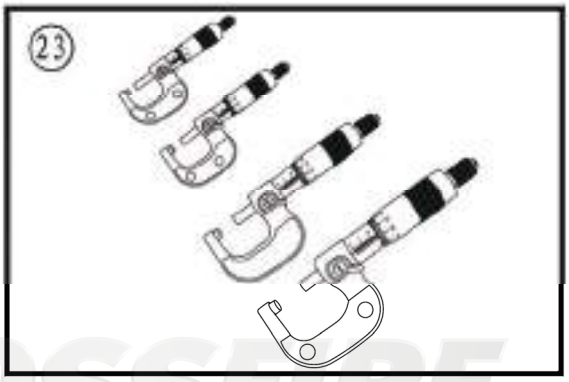

procedures in this manual call for an outside micrometer. Use the outside micrometer to measure the outside diameter of cylindrical forms and the thickness of materials.

A micrometer's size indicates the minimum and maximum size of a part that it can measure. The usual sizes (**Figure 23**) are 0-25mm (0-1 in.), 25-50 mm (1-2 in.), 50-75 mm (2-3 in.) and 75-100 mm (3-4 in.).

Micrometers that cover a wider range of measurements are available. These use a large frame with interchangeable anvils of various lengths. This type of micrometer offers a cost savings, but its overall size may make it less convenient.

When reading a micrometer, numbers are taken from different scales and added together. The following sections describe how to adjust, care for and read the measurements of various types of outside micrometers.

For accurate results, properly maintain the measuring surfaces of the micrometer. There cannot be any dirt or burrs between the tool and the measured object. Never force the micrometer to close around an object. Close the micrometer around the highest point so it can be removed with a slight drag.

Adjustment

Before using a micrometer, check its adjustment as follows:

1. Clean the anvil and spindle faces.

2A. To check a 0-1 in. or 0-25 mm micrometer:

a. Turn the thimble until the spindle contacts the anvil. If the micrometer has a ratchet stop, use it to ensure that the proper amount of pressure is applied.

b. If the adjustment is correct, the 0 mark on the thimble will align exactly with the 0 mark on the sleeve line. If the marks do not align, the micrometer is out of adjustment.

c. Follow the manufacturer's instructions to adjust the micrometer.

2B. To check a micrometer larger than 1 in. or 25 mm use the standard gauge supplied by the manufacturer. A standard gauge is a steel block, disc or rod that is machined to an exact size.

a. Place the standard gauge between the spindle and anvil, and measure its outside diameter or length. If the micrometer has a ratchet stop, use it to ensure that the proper amount of pressure is applied.

b. If the adjustment is correct, the 0 mark on the thimble will align exactly with the 0 mark on the sleeve line. If the marks do not align, the micrometer is out of adjustment.

c. Follow the manufacturer's instructions to adjust the micrometer.

Care

Micrometers are precision instruments. They must be used and maintained with great care. Note the following:

1. Store micrometers in protective cases or separate padded drawers in a tool box.
2. When in storage, make sure the spindle and anvil faces do not contact each other or another object. If they do, temperature changes and corrosion may damage the contact faces.
3. Do not clean a micrometer with compressed air. Dirt forced into the tool will cause wear.
4. Lubricate micrometers with WD-40 to prevent corrosion.

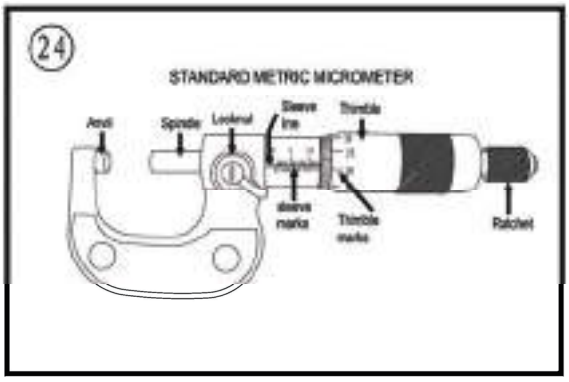

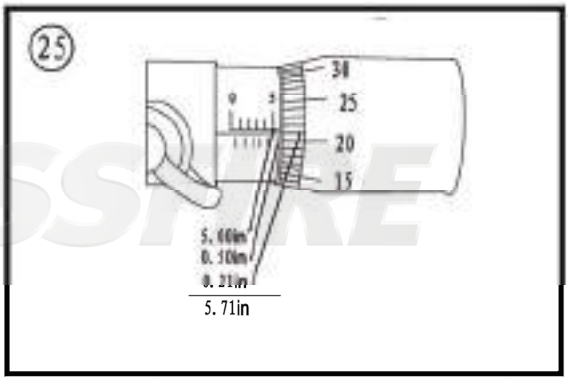

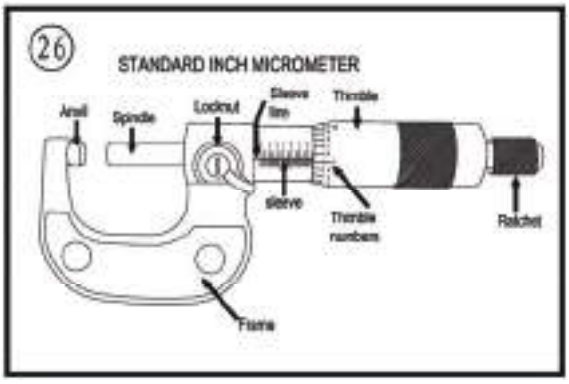

Metric micrometer

The standard metric micrometer (**Figure 24**) is accurate to one one-hundredth of a millimeter (0.01 mm). The sleeve line is graduated in millimeter and half millimeter increments. The marks on the upper half of the sleeve line equal 1.00 mm. Each fifth mark above the sleeve line is identified with a number. The number sequence depends on the size of the micrometer. A 0-25 mm micrometer, for example, will have sleeve marks numbered 0 through 25 in 5 mm increments. This numbering sequence continues with larger micrometers. On all metric micrometers, each mark on the lower half of the sleeve equals 0.50 mm.

The tapered end of the thimble has 50 lines marked around it. Each mark equals 0.01 mm. One completer turn of the thimble aligns its 0 mark with the first line lower half of the sleeve line or 0.50mm.

When reading a metric micrometer, add the number of millimeters and half-millimeters on the sleeve line to the number of one one-hundredth millimeters on the thimble. Perform the following steps while referring to **Figure 25**.

1. Read the upper half of the sleeve line and count the number of lines visible. Each upper line equals 1mm.

2. See if the half –millimeter line is visible on the lower sleeve line. If so, add 0.50mm to the reading in Step 1.
3. Read the thimble mark that aligns with the sleeve line. Each thimble mark equals 0.01mm.

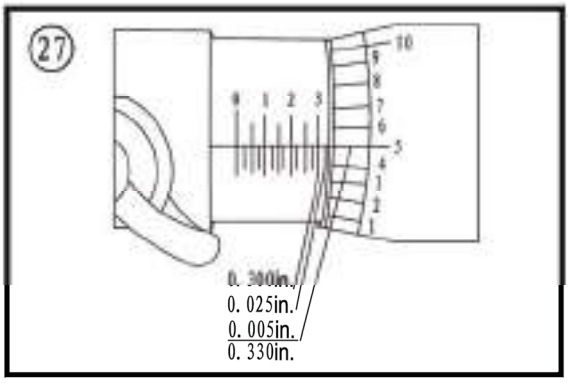

NOTE

If a thimble mark does not align exactly with the sleeve line. Estimate the amount between the lines. For accurate readings in two-thousandths of a millimeter (0.002mm), use a metric vernier micrometer.

4. Add the readings from Steps 1-3.

Standard inch micrometer

The standard inch micrometer (**Figure 26**) is accurate to one-thousandth of an inch or 0.001. The sleeve is marked in 0.025 in. increments. Every fourth sleeve mark is numbered 1,2,3,4,5,6,7,8,9. These numbers indicate 0.100, 0.200, 0.300, and so on.

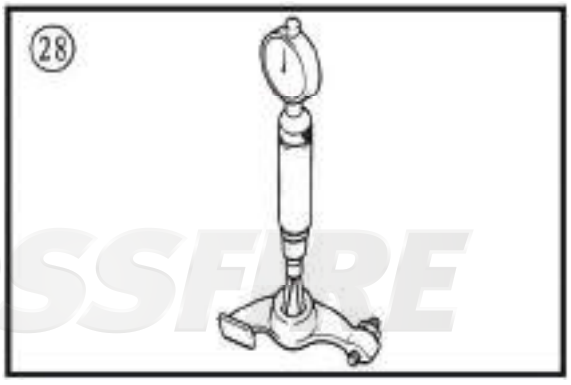

The tapered end of the thimble has 25 lines marked around it. Each mark equals 0.001 in. One complete turn of the thimble will align its zero mark with the first mark on the sleeve or 0.025 in.

To read a standard inch micrometer, perform the following steps and refer to **Figure 27**.

1. Read the sleeve and find the largest number visible. Each sleeve number equals 0.100 in.
2. Count the number of lines between the numbered sleeve mark and the edge of the thimble. Each sleeve mark equals 0.025 in.
3. Read the thimble mark that aligns with the sleeve line. Each thimble mark equals 0.01 in.

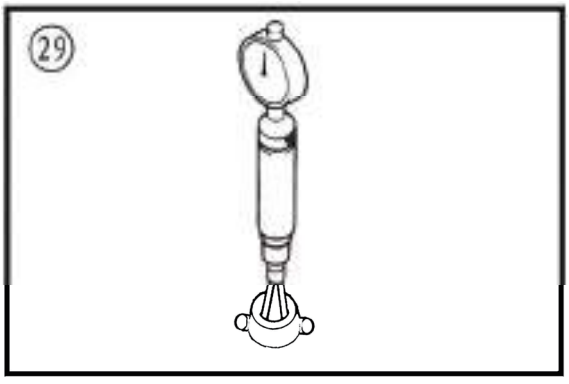

NOTE

If a thimble mark does not align exactly with the sleeve line, estimate the amount between the lines. For accurate readings in ten-thousandths of an inch (0.0001 in), use a vernier inch micrometer.

4. Add the readings from Steps 1-3.

Telescoping and Small Bore Gauges

Use telescoping gauges (**Figure 28**) and small bore gauges (**Figure 29**) to measure bores. Neither gauge has a scale for direct readings. Use an outside micrometer to determine the reading.

To use a telescoping gauge, select the correct size gauge for the bore. Compress the movable post and. Care fully insert the gauge into the bore. Carefully move the gauge in the bore to make sure it is centered. Tighten the knurled end of the gauge to hold the movable post in position. Remove the gauge and measure the length of the posts. Telescoping gauges are typically used to measure cylinder bores.

To use a small bore gauge, select the correct size gauge for the bore. Carefully insert the gauge into the bore. Tighten the knurled end of the gauge to carefully expand the gauge fingers to the limit within the bore. Do not over tighten the gauge because there is no built-in release. Excessive tightening can damage the bore surface and damage the tool. Remove the gauge and measure the outside dimension (**Figure 30**). Small bore gauges are typically used to measure valve guides.

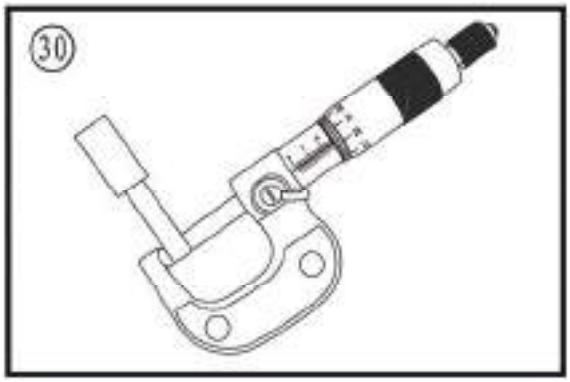

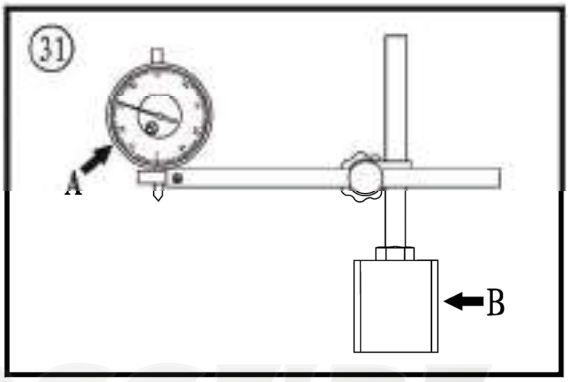

CROSSFIRE

Dial Indicator:

A dial indicator (**Figure 31**) is a gauge with a dial face and needle used to measure variations in dimensions and movements. Measuring brake rotor runout is a typical use for a dial indicator.

Dial indicators are available in various ranges and graduations and with three basic types of mounting bases: magnetic (B. **Figure 31**). Clamp, or screw-in stud. When purchasing a dial indicator, select on with a continuous dial (A, **Figure 31**).

Cylinder Bore Gauge

A cylinder bore gauge is similar to a dial indicator. The gauge set shown in **Figure 32** consists of a dial indicator, handle, and different length adapters (anvils) to fit the gauge to various bore sizes. The bore gauge is used to measure bore size, taper and out-of-round. When using a bore gauge, follow the manufacturer's instructions.

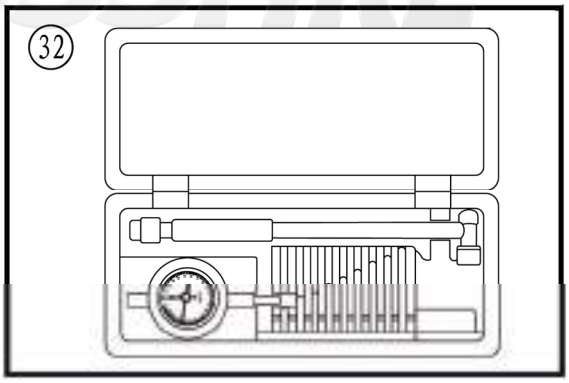

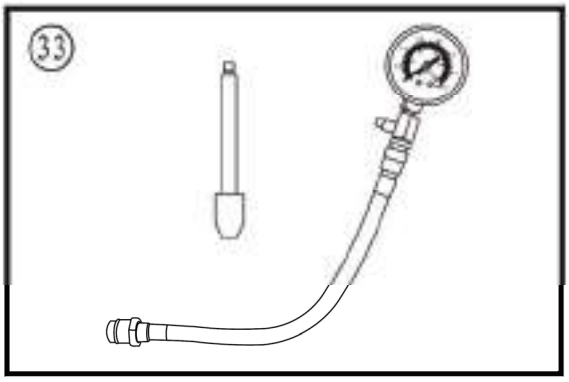

Compression Gauge

A compression gauge **(Figure 33**) measures combustion chamber (cylinder) pressure, usually in PSI or kg/ cm^2 . The gauge adapter is either inserted or screwed into the spark plug hole to obtain the reading. Disable the engine so it does not start and hold the throttle in the wide-open position when performing a compression test An engine that does not have adequate compression cannot be properly tuned. Refer to Chapter Three.

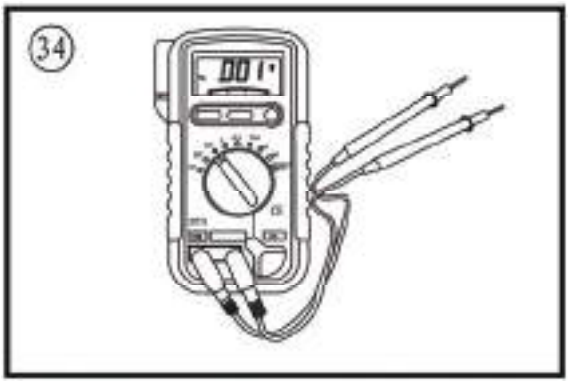

Multimeter

A multimeter **(Figure 34)** is an essential tool for electrical system diagnosis. The voltage function indicates the voltage applied or available to various electrical components. The ohmmeter function tests circuits for continuity, or lack of continuity, and measures the resistance of a circuit.

Some manufacturer's specifications for electrical components are based on results using a specific test meter. Results may vary if using a meter not recommended by the manufacturer. Such requirements are noted when applicable.

Ohmmeter (analog) calibration

Each time an analog ohmmeter is used or if the scale is changed, the ohmmeter must be calibrated.

Digital ohmmeters do not require calibration.

1. Make sure the meter battery is in good condition.
2. Make sure the meter probes are in good condition.
3. Touch the two probes together and observe the needle location on the ohms scale. The needle must Align with the 0 mark to obtain accurate measurements.
4. If necessary, rotate the meter ohms adjust knob until the needle and 0 mark align.

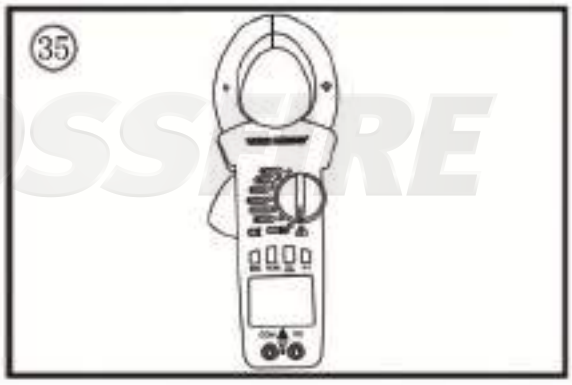

Clip-on ammeter

1. Clip-on ammeter **(Figure 35)** is the basic tool for electrical system diagnosis which is used to measure the current of charging system and other electrical components work current.
2. Clip-on ammeter can measure direct current and alternating current. Please ensure that the instrument battery capacity is sufficient when work.
3. When measure the current, the calliper must seize the positive pole of the power. If seize the negative pole mistakenly, wrong result will appear.

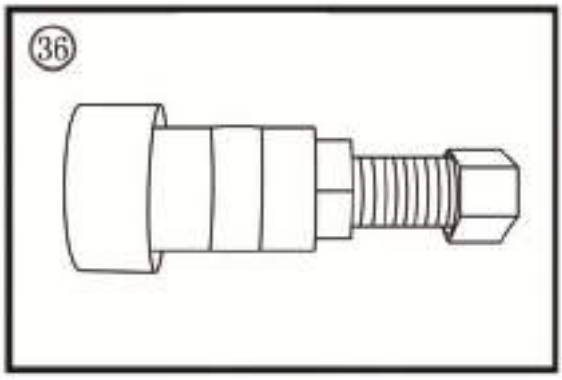

Magneto puller

Magneto drawing **(figure 36)** is special tool to dismantle magneto rotor . firstly put the mandril into th e inside of shaft hole ,Turn the magneto rotor accordingly, screw magneto drawing and push-out ma gneto rotor

ELECTRICAL SYSTEM FUNDAMENTALS

A thorough study of the many types of electrical systems used in today's motorcycles is beyond the scope of this manual. However, a basic understanding of electrical basics is necessary to perform simple diagnostic tests.

Refer to Electrical Testing in Chapter Two for typical test procedures and equipment. Refer to Chapter Ten for specific system test procedures.

Voltage

Voltage is the electrical potential or pressure in an electrical circuit and is expressed in volts. The more pressure (voltage) in a circuit the more work can be performed.

Direct current (DC) voltage means the electricity flows in one direction. All circuits powered by a battery are DC circuits.

Alternating current (AC) means the electricity flows in one direction momentarily and then switches to the opposite direction. Alternator output is an example of AC voltage. This voltage must be changed or rectified to direct current to operate in a battery powered system.

CROSSFIRE

Resistance

Resistance is the opposition to the flow of electricity within a circuit or component and is measured in ohms. Resistance causes a reduction in available current and voltage

Resistance is measured in an inactive circuit with an ohmmeter. The ohmmeter sends a small amount of current into the circuit and measures how difficult it is to push the current through the circuit.

An ohmmeter, although useful, is not always a good indicator of a circuit's actual ability under operating conditions. This is because of the low voltage (6-9 volts) the meter uses to test the circuit. The voltage in an ignition coil secondary winding can be several thousand volts. Such high voltage can cause the coil to malfunction, even though it tests acceptable during a resistance test.

Resistance generally. Increases with temperature. Perform all testing with the component or circuit at room temperature. Resistance tests performed at high temperatures may indicate high resistance readings and cause unnecessary replacement of a component.

Amperage

Amperage is the unit of measurement for the amount of current within a circuit. Current is the actual flow of electricity. The higher the current, the more work can be performed up to a given point. If the current flow exceeds the circuit or component capacity, it will damage the system.

Warning

If the current insulation damage, may cause short circuit fault which lead to short circuit or large current in components. It may cause a fire.

Thus, if the current of circuit or components measured by amperage exceeds the standard level, must check and repair electrical system at once.

BASIC SERVICE METHODS

Most of the procedures in this manual are straightforward and can be performed by anyone reasonably competent with tools. However, consider personal capabilities carefully before attempting any operation involving major disassembly.

1. Front, in this manual, riders to the front of the UTV, The front of any component is the end closest to the front the UTV. The left and right sides refer to the position of the parts as viewed by the rider sitting on the seat facing forward.
2. Whenever servicing an engine or suspension component, secure the UTV in a safe manner.
3. Tag all similar parts for location and mark all mating parts for position. Record the number and thickness of any shims when removing them. Identify parts by placing them in sealed and labeled plastic sandwich bags.
4. Tag disconnected wires and connectors with masking tape and a marking pen. Do not rely on memory alone.
5. Protect finished surfaces from physical damage or corrosion. Keep gasoline and other chemicals off painted surfaces.
6. Use penetrating oil on frozen or tight bolts. Avoid using heat where possible. Heat can warp, melt or affect the temper of parts. Heat also damages the finish of paint and plastics.
7. When a part is a press fit or requires a special tool to remove, the information or type of tool is identified in the text. Otherwise, if a part is difficult to remove or install, determine the cause before proceeding.
8. To prevent objects or debris from falling into the engine, cover all openings.
9. Read each procedure thoroughly and compare the illustrations to the actual components before starting the procedure. Perform the procedure in
10. Recommendations are occasionally made to refer service to a dealership or specialist. In these cases, the work can be performed more economically by the specialist than by the home mechanic.
11. The term replaces means to discard a defective part and replace it with a new part. Overhaul means to remove, disassemble, inspect, measure, repair and/or replace parts as required to recondition an assembly.
12. Some operations require using a hydraulic press. If a press is not available, have these operations performed by a shop equipped with the necessary equipment. Do not use makeshift equipment that may damage the motorcycle.
13. Repairs are much faster and easier if the UTV is clean before starting work. Degrease the motorcycle with a commercial degreaser; follow the directions on the container for the best results. Clean all parts with cleaning solvent when removing them.

CROSSFIRE

CAUTION

Do not direct high-pressure water at steering bearings, fuel hoses, wheel bearings, suspension and electrical components. Water may force grease out of the bearings and possibly damage the seals

14. If special tools are required, have them available before starting the procedure. When special tools are required, they are described at the beginning of the procedure.
15. Make diagrams of similar-appearing parts. For instance, crankcase bolts are often not the same lengths. Do not rely on memory alone. Carefully laid out parts can become disturbed, making it difficult to reassemble the comports correctly.
16. Make sure all shims and washers are reinstalled in the same location and position.
17. Whenever rotating parts contact a stationary part, look for a shim or washer.
18. Use new gaskets if there is any doubt about the condition of old ones.
19. If using self-locking fasteners, replace them with new ones. Do not install standard fasteners in place of self-locking ones.
20. Use grease to hold small parts in place if they tend to fall out during assembly. Do not apply grease to electrical or brake components.

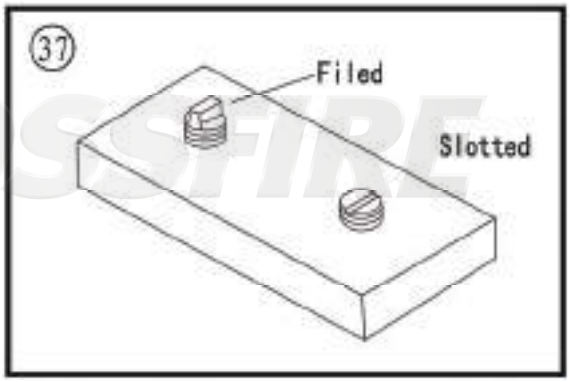

Removing Frozen Fasteners

If a fastener cannot be removed, several methods may be used to loosen it. First, apply a penetrating fluid. Apply it liberally and let it penetrate for 10-15 minutes. Rap the fastener several times with a small hammer. Do not hit it hard enough to cause damage. Reapply the penetrating fluid if necessary.

For frozen screws, apply penetrating fluid as described, the insert a screwdriver in the slot and rap the top of the screwdriver with a hammer. This loosens the rust so the screw can be removed in the normal way. If the screw head is too damaged to use this method, grip the head with locking pliers and twist the screw out.

Avoid applying heat unless specifically instructed. Heat may melt, warp or remove the temper from parts.

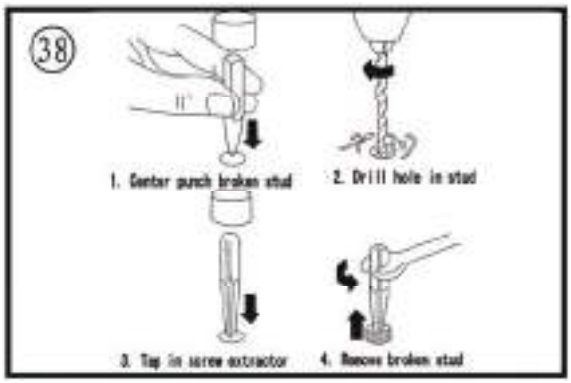

Removing Broken Fasteners

If the head breaks off a screw or bolt, several methods are available for removing the remaining portion. If a large portion of the remainder projects out, try gripping it with locking pliers. If the projecting portion is too small, file it to fit a wrench of cut a slot in it to fit a screwdriver (**Figure 37**)

If the head breaks off flush, use a screw extractor. To do this, center punch the exact center of the

remaining portion of the screw or bolt. Drill a small hole in the screw and tap the extractor into the hole. Back the screw out with a wrench on the extractor (**Figure 38**)

Repairing Damaged Threads

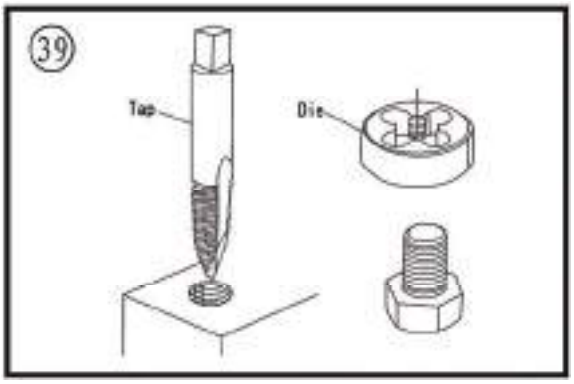

Occasionally, threads are stripped through carelessness or impact damage. Often the threads can be repaired by running a tap (for internal threads on nuts) or die (for external threads on bolts) through the threads (**Figure 39**). To clean or repair spark plug threads, use a spark plug tap.

If an internal thread is damaged, it may be necessary to install a Helical or some other type of thread insert. Follow the manufacturer's instructions when installing their insert.

If it is necessary to drill and tap a hole, refer to **Table 8** for metric tap and drill sizes.

Stud Removal/Installation

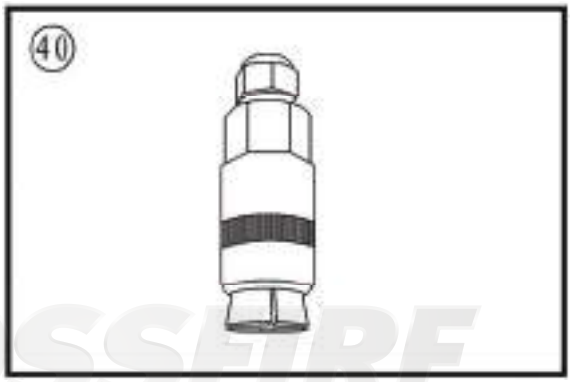

A stud removal tool **(Figure 40)** is available from most tool suppliers. This tool makes the removal and installation of studs easier. If one is not available, thread two must onto the stud and tighten them against each other. Remove the stud by turning the lower nut **(Figure 41).**

CROSSFIRE

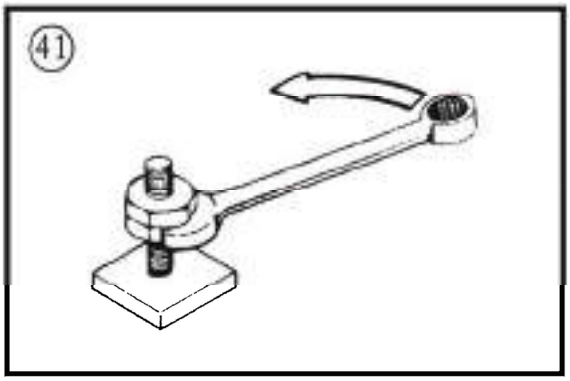

1. Measure the height of the stud above the surface.
2. Thread the stud removal tool onto the stud and tighten it, or thread two nuts onto the stud.
3. Remove the stud by turning the stud remover or the lower nut.
4. Remove any thread locking compound from the threaded hole. Clean the threads with an aerosol parts cleaner.
5. Install the stud removal tool onto the new stud or thread two nuts onto the stud.
6. Apply thread locking compound to the threads of the stud.
7. Install the stud and tighten with the stud removal tool or the top nut.
8. Install the stud to the height noted in Step 1 or its torque specification.
9. Remove the stud removal tool or the two nuts.

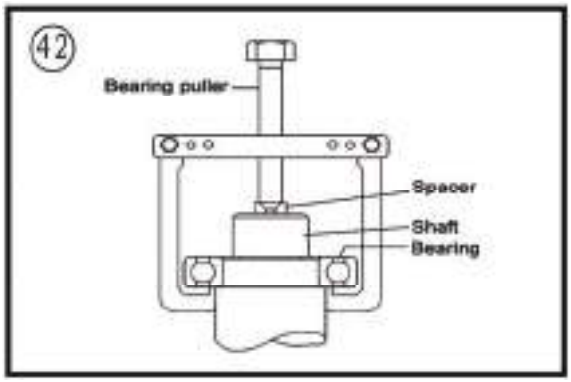

Removing Hoses

When removing stubborn hoses, do not exert excessive force on the hose or fitting. Remove the

hose, do not exert excessive force on the hose or fitting. Remove the hose clamp and carefully insert a small screwdriver or pick tool between the fitting and hose. Apply a spray lubricant under the hose and carefully twist the hose off the fitting. Clean the fitting of any corrosion or rubber hose material with a wire brush Clean the inside of the hose thoroughly. Do not use any lubricant when installing the hose (new or old). The lubricant may allow the hose to come off the fitting, even with the clamp secure.

Bearings

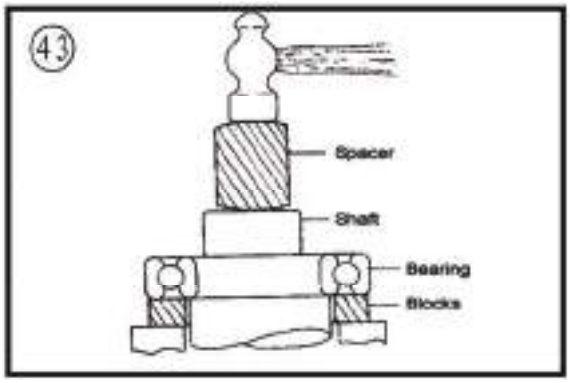

Bearings are used in the engine and transmission assembly to reduce power loss, heat and noise resulting from friction. Because bearings are precision parts, they must be maintained with proper lubrication and maintenance. If a bearing is damaged, replace it immediately. When installing a new bearing, take care to prevent damaging it. Bearing replacement procedures are included in the individual chapters where applicable; however. Use the following sections as a guideline.

NOTE

Unless otherwise specified, install bearings with the manufacturer's mark or number facing outward.

CROSSFIRE

Removal

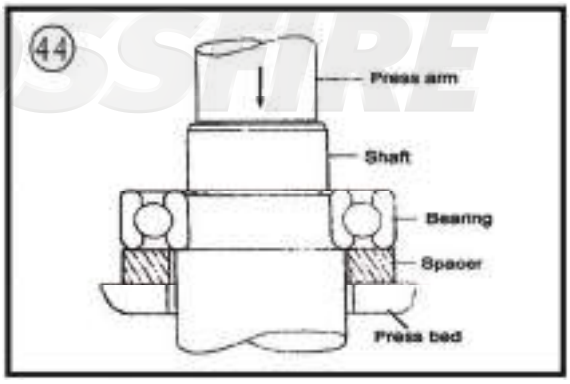

While bearing are normally removed only when damaged, there may be times when it is necessary to remove a bearing that is in good condition. However, improper bearing removal will damage the bearing and possibly the shaft or case. Note the following when removing bearings:

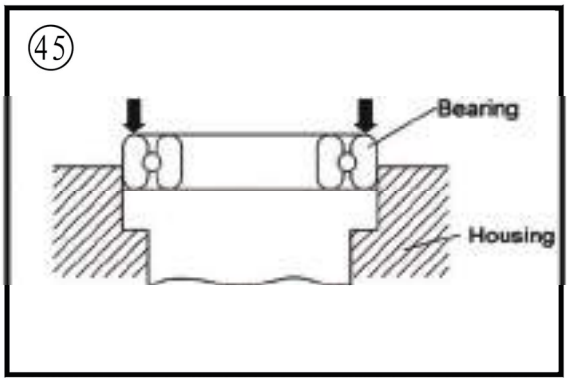

1. When using a puller to remove a bearing from a shaft, take care that the shaft is not damaged. Always place a piece of metal between the end of the shaft and the puller screw. In addition, place the puller arms next to the inner bearing race. See **Figure 42.**
2. When using a hammer to remove a bearing from a shaft. do not strike the hammer directly against the shaft. Instead, use a brass or aluminum rod between the hammer and shaft **(Figure 43)** and make sure to support both bearing races with wooden blocks as shown.
3. The ideal method of bearing removal is with a hydraulic press. Note the following when using a press:
   a. Always support the inner and outer bearing races with a suitable size wooden or aluminum spacer **(Figure 44).** If only the outer race is supported, pressure applie against the balls

and/or the inner race will damage them.

b. Always make sure the press arm **(Figure 44)** aligns with the center of the shaft. If the arm is not centered, it may damage the bearing and/or shaft.

c. The moment the shaft is free of the bearing. It drops to the floor. Secure or hold the shaft to prevent it from falling.

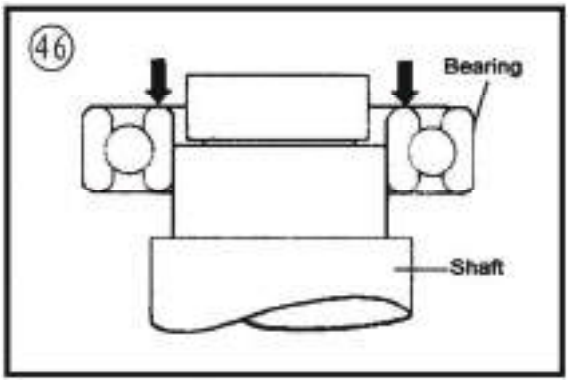

Installation

1. When installing a bearing in a housing, apply pressure to the outer bearing race **(Figure 45).** When installing a bearing on a shaft, apply pressure to the inner bearing race **(Figure 46).**
2. When installing a bearing as described in Step 1, some type of driver is required. Never strike the bearing directly with a hammer or it will damage the bearing. When installing a bearing, use a piece of pipe or a driver with a diameter that matches the bearing inner race. **Figure 47** Shows the correct way to use a driver and hammer to install a bearing.
3. Step 1 describes how to install a bearing in a case half or over a shaft However, when installing a bearing over a shaft and into the housing at the same time, a tight fit is required for both outer and inner bearing races. In this situation, install a spacer underneath the driver tool so that pressure is applied evenly across both races. See **Figure 48.** If the outer race is not supported as shown, the balls will push against the outer bearing race and damage it

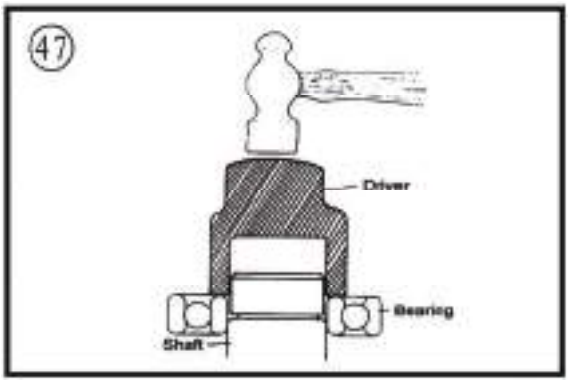

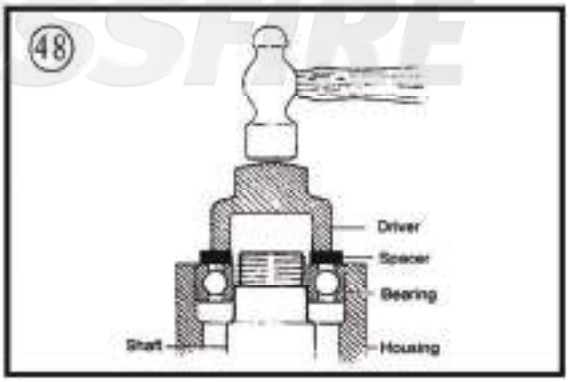

Interference fit

1. Follow this procedure when installing a bearing over a shaft. When a tight fit is required, the bearing inside diameter is smaller than the shaft. In this case. Driving the bearing on the shaft using normal methods may cause bearing damage. Instead, heat the bearing before installation. Note the following:
   a. Secure the shaft so it is ready for bearing installation.
   b. Clean all residues from the bearing surface of the shaft. Remove burrs with a file or sandpaper.
   c. Fill a suitable pot or beaker with clean mineral oil. Place a thermometer rated above 120℃(248°F) in the oil. Support the thermometer so it does not rest on the bottom or side of the pot.
   d. Remove the bearing from its wrapper and secure it with a piece of heavy wire bent to hold it in the pot. Hang the bearing in the pot so it does not touch the bottom or sides of the pot.

e. Turn the heat on and monitor the thermometer. When the oil temperature rises to approximately 120℃(248°F), remove the bearing from the pot and quickly install it. If necessary, place a socket on the inner bearing race and tap the bearing into place. As the bearing chills, it will tighten on the shaft, so install it quickly. Make sure the bearing is installed completely.

2. Follow this step when installing a bearing in a housing. Bearings are general installed in a housing with a slight interference fit Driving the bearing into the housing using normal methods may damage the housing or cause bearing damage. Instead, heat the housing before the bearing is installed. Note the following:

CAUTION

Before heating the housing in this procedure, wash the housing thoroughly with detergent and water. Rinse and rewash the cases as required to remove all traces of oil and other chemical deposits

a. Heat the housing to approximately 100℃ (212°F) in an oven or on a hot plate. An easy way to check that it is the proper temperature is to place tiny drops of water on the housing; if they sizzle and evaporate immediately, the temperature is correct. Heat only one housing at a time.

CAUTION

Do not heat the housing with a propane or acetylene torch. Never bring a flame into contact with the bearing or housing. The direct heat will destroy the case hardening of the bearing and will likely warp the housing.

CROSSFIRE

b. Remove the housing from the oven or hot plate, and hold onto the housing with welding gloves. It is hot!

NOTE

Remove and install the bearings with a suitable size socket and extension.

c. Hold the housing with the bearing side down and tap the bearing out. Repeat for all bearings in the housing.

d. Before heating the bearing housing, place the new bearing in a freezer if possible. Chilling a bearing slightly reduces its outside diameter while the heated bearing housing assembly is slightly larger due to heat expansion. This makes bearing installation easier.

NOTE

Always install bearings with the manufacturer's mark or number facing outward.

e. While the housing is still hot. Install the new bearing(s) into the housing. Install the bearings by hand. if possible. If necessary, lightly tap the bearing(s) into the housing with a driver placed on the outer bearing race (**Figure 43**). Do not install new bearings by driving on the inner-bearing race. Install the bearing(s) until it seats completely.

Seal Replacement

Seals (**Figure 49**) contain oil, water, grease or combustion gasses in a housing or shaft. Improperly removing a seal can damage the housing or shaft. Improperly installing the seal can damage the seat. Note the following:

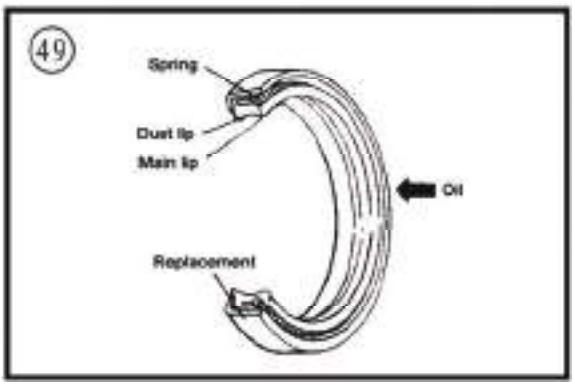

1. Prying is generally the easiest and most effective method of removing a seal from the housing. However. Always place a rag underneath the pry tool to prevent damage to the housing. Note the seal's installed depth or if it is installed flush.
2. Pack waterproof grease in the seal lips before the seal is installed.
3. In most cases, install seals with the manufacturer's numbers or marks facing out.
4. Install seals with a socket or driver placed on the outside of the seal as shown in. Drive the seal squarely into the housing until it is to the correct depth or flush as noted during removal. Never install a seal by hitting against the top of it with a hammer.

STORAGE

Several months of non-use can cause a general deterioration of the motorcycle, UTV This is especially true in areas of extreme temperature variations. This deterioration can be minimized with careful preparation for storage. A properly stored motorcycle is much easier to return to service.

CROSSFIRE

Storage Area Selection

When selecting a storage area, consider the following:

1. The storage area must be dry. A heated area is best, but not necessary. It should be insulated to minimize extreme temperature variations.
2. If the building has large window areas, mask them to keep sunlight off the UTV .
3. Avoid buildings in industrial areas where corrosive emissions may be present. Avoid areas close to saltwater.
4. Consider the area's risk of fire, theft or vandalism. Check with an insurer regarding UTV coverage while in storage.

Preparing the Motorcycle for Storage

The amount of preparation a motorcycle should undergo before storage depends on the expected length of non-use, storage area conditions and personal preference. Consider the following list the minimum requirement:

1. Wash the UTV thoroughly. Make sure all dirt, mud and other debris are removed.
2. Lubricate the drive chain.
3. Start the engine and allow it to reach operating temperature. Drain the engine oil regardless of the riding time since the last service. Fill the engine with the recommended type of oil.
4. Drain the fuel tank fuel lines throttle.
5. Remove the spark plug and ground the ignition system with a grounding tool as described in this chapter. Then pour a teaspoon (15-20ml) of engine oil into the cylinder. Place a rag over the opening and Start the engine over to distribute the oil. Remove the grounding tool and reinstall the spark plug.

6. When the engine has cooled to room temperature, drain the cooling system drain the coolant in the coolant reserve tank and all tank lines.
7. Cover the exhaust and intake opening.
8. Apply a protective substance to the plastic and rubber components. Make sure to follow the manufacturer's instructions for each type of product being used.
9. Place the UTV on a work stand with both wheels off the ground.
10. Cover the UTV with old bed sheets or something similar. Do not cover it with any plastic material that will trap moisture.

Returning the UTV to Service

The amount of service required when returning a UTV to service after storage depends on the length of non-use and storage conditions. In addition to performing the reverse of the procedure, note the following:

1. Remove the covers from the intake and exhaust openings.
2. Service the air filter as described in Chapter Three.
3. Inspect the cooling system. Check the drain plug and hose connections for leaks.
4. Refill the fuel tank. Turn the fuel shutoff valve on and check for fuel leaks.
5. Make sure the brakes, clutch, throttle and engine stop switch work properly before operating the UTV. Evaluate the service intervals to determine which areas require service.
6. If the UTV has been in storage for longer than four months, change the engine oil as and filter, and the transmission oil as described

CROSSFIRE

TROVBLESHOOTING

Diagnose electrical and mechanical problems by following an orderly procedure and remembering the basic operating requirements

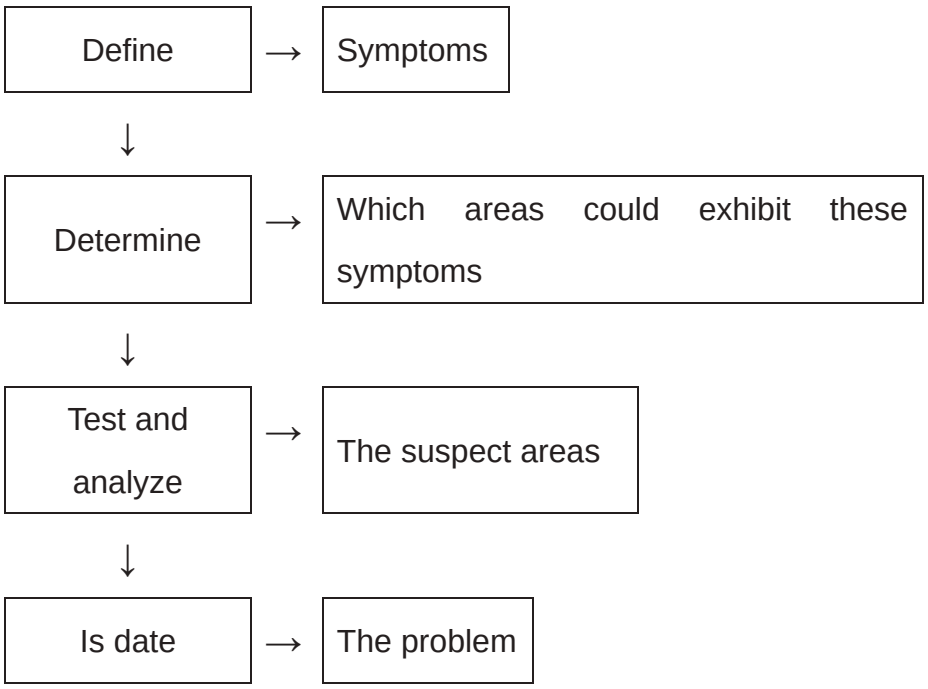

By following a systematic approach, the possibility of unnecessary parts replacement can be avoid, always start with the simple and most obvious checks when troubleshooting, This would include

the engine stop switch, fuel quantity and condition, fuel vale position and spark plug cap tightness

Proper maintenance as described in Chapter Three reduces the necessity for troubleshooting. Even with the best of care, however, the motorcycle may develop problems that require trouble shooting.

If the problem cannot be solved. Stop and evaluate all conditions prior to the problem. If the motorcycle must be taken to a repair facility, the mechanic will want to know as many details as possible.

For removal, installation and test procedures for some components, refer to the specific chapter. When applicable, tables at the end of each chapter also provide specifications and service limits.

ENGINE PRINCIPLES AND OPERATING REQUIREMENTS

An engine needs three basics to run properly:

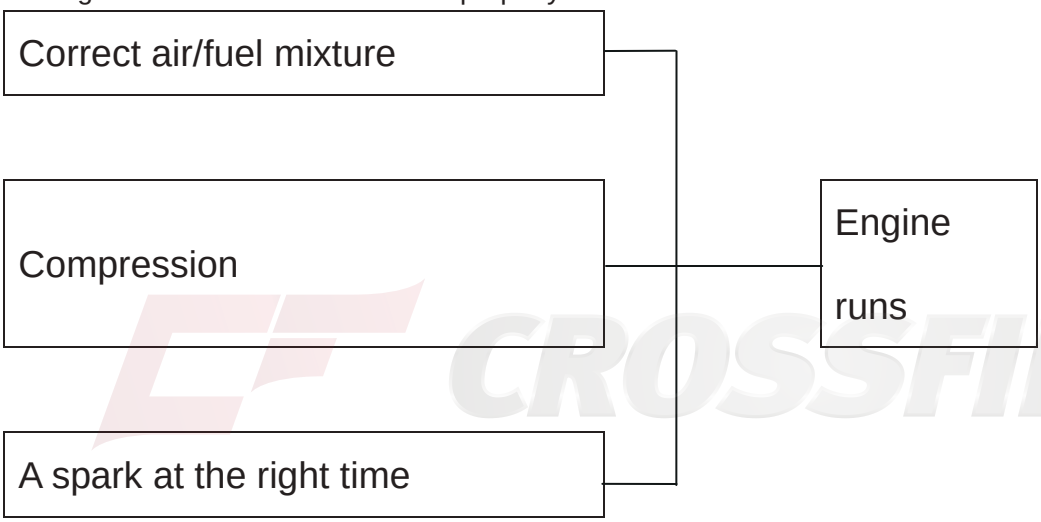

If one basic requirement is missing the engine will not run.

STARTING THE ENGINE

When experiencing engine-starting troubles, it is easy to work out of sequence and forget basic starting procedures. The following sections describe the recommended starting procedures.

Several special faults and countermeasures of EFI engine system

1.Special fault：

Idle speed is too high at starting moment。

The engine start normally, the engine speed will be a little higher than normal idle speed (1400rpm) within the first 10 seconds. According to different temperature of engine coolant, the process will continue from several seconds to tens of seconds.

Finally, the engine speed will decrease to normal idle speed automatically.

Reason: The intelligent control function of EFI automatically forces to complete the engine warm-up process and enhance the oil pressure to correct level at the same time.

Result: Ensure the engine can work with steady idle speed and conducive to complete the engine warm-up process quickly after start engine in low temperature.

2.Special fault：

Idle instability, CH and CO of off-gas out of limits

Reason：Oxygen sensor loosing cause slight leakage or pipe slight leakage and makes the oxygen sensor collect too much oxygen ion signal. The wrong signal transmits to the ECU which result the increasing of oil supply. Finally, it causes the oil too thick.

3.Special fault:

In the vehicle driving process, there is no idle speed or too low idle speed when restart it after storage battery power off abnormally.

Countermeasure: Step on the throttle slightly when start the engine and maintain for a few seconds. And then let go of the throttle, remove the key and switch off the vehicle. After waiting for ten minutes, switch on with the key that could restart the engine.

4.Special fault:

The engine can't start normally after changing air filter or air throttle

Reason：The inner cleanness of old air filter and air throttle is poor after long running. The idle speed step motor will revise the volume of air up automatically. If change to new air filter or air throttle, idle speed step motor inside ECU need to match the volume of oil when in idle speed automatically.

Countermeasure: When start the engine, run 2 to 3 minutes in idle speed. If it can't run normally in idle, turn off the engine and restart it repeatedly 10 seconds later until it can run normally in idle. Or switch on and off the key 5 times in a row which can reset all saved data in ECU.

CROSSFIRE

Engine is cold

1. Shift the transmission into neutral.
2. Turn the fuel valve on or confirm if the fuel is in upper or below retile in the fuel tank.
3. Start the engine and run in neutral for 1 minute to enhance the temperature of engine. If it runs normally in neutral, you can drive the UTV.

NOTE

Race the engine with high power in low temperature will cause damage to the engine.

Engine is warm

1. Shift the transmission into neutral.
2. Confirm if the fuel is in upper or below retied in the tank.
3. Start the engine. If the engine can run in idle speed steady and the engine speed is lower than 1600RPM, the UTV can shift driving forward.

NOTE

Shift operation must be after UTV has stopped and the engine speed has reduced to idle speed (1450RPM).

Flooded engine

If the engine fails to start after several attempts, it is probably flooded. This occurs when too much

fuel is drawn into the engine and the spark plug fails to ignite it. The smell of gasoline is often evident when the engine is flooded. Troubleshoot a flooded engine as follows:

1. Open the throttle fully and hold in this position. Then start the engine firmly through its entire stoke ten times to clear the engine. Close the throttle.
2. Check and repair ignition system.
3. If the engine still does not start, refer to Engine will Not Start this chapter.

ENGINE WILL NOT START

Identifying the Problem

If the engine does not start, perform the following steps in order while remembering the Engine Principals and Operating Requirements described in this chapter. If the engine fails to start after performing these checks, refer to the troubleshooting procedures indicated in the steps. If the engine starts, but idles or runs roughly, refer to Poor Engine Performance in this chapter.

1. Refer to Starting the Engine in this chapter to make sure all starting procedures are correct.
2. If the engine seems flooded, refer to Starting The Engine in this chapter. If the engine is not flooded, continue with Step 3.
3. Remove the cap from the fuel tank and make sure the fuel tank and make sure the fuel tank has a sufficient amount of fuel to start the engine.
4. If there is sufficient fuel in the fuel tank, remove the spark plug immediately after attempting to start the engine. The plug's insulator should be wet, indicating that fuel is reaching the engine. If the plug tip is dry, fuel is not reaching the engine. Refer to Fuel System in this chapter. If there is fuel on the spark plug and the engine will not start, the engine may not have adequate spark. Continue with Step 5.
5. Make sure the direct ignition coil or spark plug wire is secure. Push the direct ignition coil or spark plug cap and slightly rotate it to clean the electrical connection between the plug and the connector. If the engine does not start. Continue with step 6

NOTE

A cracked or damaged direct ignition coil or spark plug cap and cable can cause intermittent problems that are difficult to diagnose. If the engine occasionally misfires or cuts out, use a spray bottle to wet the direct ignition coil or plug cap and plug cable while the engine is running. Water that enters one of theses areas causes an arc through the insulating material, causing an engine misfire.

NOTE

Engine misfire can also be caused by water that enters through connectors. Check the connectors for loose wire ends. On waterproof connectors, check for damage where the wires enter the connector.

6. Perform the Spark Test in this section. If there is a strong spark, perform Step 7. If there is no spark or if the spark is very weak, refer to Ignition System Testing in Chapter Ten.
7. If the fuel and ignition systems are working correctly, perform a leak down test (this chapter) and cylinder compression test. If the leak down test indicates a problem, or the compression under Engine in this chapter.

Spark Test

Perform a spark test to determine if the ignition system is producing adequate spark. This test should be performed with a spark tester. A spark tester looks like a spark plug with an adjustable gap between the center electrode and grounded base. Because the voltage required to jump the spark tester gap is sufficiently larger than that of a normally gapped spark plug, the test results are more accurate than with a spark plug. Do not assume that because a spark jumped across a spark plug gap, the ignition system is working correctly.

Perform this test on the engine when it is both cold and hot, if possible. If the test results are positive for each test, the ignition system is working correctly.

CAUTION

After removing the direct ignition coil or spark plug cap and before removing the spark plug in Step 1, clean the area around the spark plug with compressed air. Dirt that falls into the cylinder causes rapid engine wear.

CROSSFIRE

1. Disconnect the direct ignition coil or spark plug cap. Check for the presence of water.
2. Visually inspect the spark plug for damage.
3. Connect a spark tester to the direct ignition coil or spark plug cap. Ground the spark tester base (or spark plug) to a good ground. Position the spark tester or spark plug firing tip away from the open spark plug hole. Position the spark tester so the electrodes are visible.

WARNING

Mount the spark tester or spark plug away from the spark plug hole in the cylinder. If the engine is flooded, do not perform this test. The spark tester can ignite fuel ejected through the spark plug hole.

4.Shift the transmission into neutral.

WARNING

Do not hold the spark tester, spark plug or connector or a serious electrical shock may result.

5. Turn the engine over using the starter and push the starter button. A fat blue spark must be evident between the spark tester or spark plug terminals.
6. If there is a strong, blue spark, the ignition system is functioning properly, Check for one or more of the following possible malfunctions:
   a. Faulty fuel system component.

b. Flooded engine.

c. engine damage(low compression).

7. If the spark was weak (white or yellow) or if there was no spark, perform the peak voltage checks described under Ignition System Testing.
8. Reinstall the fuel tank.

The Starter Cannot Work Repeatedly Or Can Only Work Slowly

Refer to Starting System Testing

POOR ENGINE PERFORMANCE

If the engine runs, but performance is unsatisfactory, refer to the following section that best describes the symptoms.

The Engine Starts Slowly Or Difficultly

Check for the following:

1. Incorrect choke operation. This can be due to improper use or a stuck choke valve in the throttle.”
2. Incorrect hot start valve operation. This situation can be due to improper use or incorrect hot start valve adjustment.
3. The fuel tank connection hose is clogged.
4. The fuel hose is clogged or the oil filter is clogged.
5. The injector is clogged.

NOTE

If a warm or hot engine will start with the choke on, or if a cold engine starts and runs until the choke is turned off. The pilot jet is probably plugged.

6. Contaminated or stale fuel.
7. Clogged air filter.
8. Intake pipe air leak.
9. Plugged exhaust system. Check the silencer or muffler, especially if the utility terrain vehicle was just returned from storage.
10. Faulty ignition system component.

Engine Backfires, Cuts Out or Misfires During Acceleration

A backfire occurs when fuel is burned or ignited in the exhaust system.

1. A lean air/fuel mixture can cause these engine performance problems. Check for the following conditions:
   a. Incorrect float level adjustment.
   b. Plugged pilot jet or pilot system.
2. Faulty accelerator pump.
3. Loose exhaust pipe-to-cylinder head connection.

4. Intake air leak.
5. Incorrect ignition timing or a damaged ignition system can cause these conditions. Perform the Peak Voltage Tests to isolate the damaged ignition system component. Check the ignition timing as described.

NOTE

The ignition timing is controlled by the ICM and cannot be adjusted. However, checking the ignition timing can be used to diagnose problems.

6. Check the following engine components:
   a. Broken valve springs.
   b. Stuck or leaking valves.
   c. Worn or damaged camshaft lobes.
   d. Incorrect valve timing due to incorrect camshaft installation or a mechanical failure.

The Engine Is Not Idling Or Cannot Idle Stably

If the engine backfires when the throttle is released, check the following:

1. Lean throttle pilot system.
2. Loose exhaust pipe-to-cylinder head connection.
3. Faulty ignition system component.
4. Check the following engine components:
   a. Broken valve springs.
   b. Stuck or leaking valves.
   c. Worn or damaged camshaft lobes.
   d. Incorrect valve timing due to incorrect camshaft installation or a mechanical failure.

CROSSFIRE

Poor Fuel Mileage

1. Clogged fuel system.
2. Dirty or clogged air filter.
3. Incorrect ignition timing.

Engine Will Not Idle or Idles Roughly

1. Clogged air filter element.
2. Poor fuel filter or fuel hose.
3. Faulty accelerator pump assembly.
4. Contaminated or stale fuel.
5. ECU is not working properly, according to the 33 page "5 special treatment failure".
6. Leaking head gasket.
7. Intake air leak.
8. Incorrect ignition timing
9. Low engine compression

Low Engine Power

1. Support the UTV in a stand with the rear wheel off the ground. then spins freely. If the wheel does not spin freely. Check for the following conditions:
   a. Dragging brakes. Check for this condition immediately after riding the UTV

NOTE

After riding the UTV. Come to a stop on a level surface. Turn the engine off and shift the transmission into neutral. Walk or push the UTV forward. If the UTV is harder to push than normal. Check for dragging brakes

   b. Damaged or binding drive system
   c. Damaged drive system and gear bearing
2. Test ride the UTV and accelerate quickly from first to second gear. If the engine speed in-creased according to throttle position. Perform **Step 3**. If the engine speed did not increase. Check CVT
   a. Warped clutch plates/discs
   b. CVT spring
3. Test rides the UTV and accelerate lightly. If the engine speed increased according to throttle position. Perform Step 4. If the engine speed did not increase. Check for one or more of the following problems:
   a. Clogged air filter
   b. Restricted fuel flow
   c. Pinched fuel tank breather hose (Figure 9).
   d. Clogged or damaged silencer or muffler

CROSSFIRE

NOTE

A clogged exhaust system will prevent some of the burned exhaust gasses from exiting the exhaust port at the end of the exhaust stroke. This condition effects the incoming air/fuel mixture on the intake stroke and reduces engine power

4. Check for retarded ignition timing. A decrease in power results when the plugs fire later than normal
5. Check for one or more of the following problems
   a. Low engine compression
   b. Worn spark plug
   c. Fouled spark plug
   d. Incorrect spark plug heat range
   e. Weak ignition coil
   f. Incorrect ignition timing
   g. Plugged throttle passages
   h. Incorrect oil level (too high or too low)
   i. Contaminated oil
   j. Worn or damaged valve train assembly
   k. Engine overheating

6. If the engine knocks when it is accelerated or when running at high speed. Check for one or more of the following possible malfunctions:
   a. Incorrect type of fuel
   b. Lean fuel mixture
   c. Advanced ignition timing

NOTE

Other signs of advanced ignition timing are engine overheating and hard or uneven engine starting

   d. Excessive carbon buildup in combustion chamber
   e. Worn pistons and/or cylinder bores

Poor Idle or Low Speed Performance

1. Check for an incorrect pilot screw adjustment
2. Check for damaged or loose intake pipe and air filter housing hose clamps. These conditions will cause an air leak
3. Perform the spark test in this chapter. Note the following:
   a. If the spark is good. Go to Step 4
   b. If the spark is weak. *Perform the Peak Voltage Testing*
4. Check the ignition timing. If ignition timing is correct. Perform Step 5. If the timing is incorrect. Perform the *Peak Voltage Testing*
5. Check the fuel system as described in this chapter

CROSSFIRE

Poor High Speed Performance

1. Check ignition timing. If the ignition timing is correct. Perform Step 2. If the timing is incorrect. Perform the *Peak Voltage*
2. Check the fuel system as described in this chapter
3. Check the valve clearance as described. Note the following:
   a. If the valve clearance as correct. Perform Step 4
   b. If the clearance is incorrect. adjust the valves clearance as described in Chapter Three
4. Incorrect valve timing and worn or damaged valve springs can cause poor high-speed performance. If the camshaft was timed just before the UTV experiencing this type of problem. The cam timing may be incorrect. If the cam timing was not set or changed. And all the other inspection procedures in this section failed to locate the problem. Inspect the camshaft and valves assembly

FUEL SYSTEM

The following section isolates common fuel system problems under specific complaints. If there is a good spark. Poor fuel flow may be preventing the correct amount of fuel from being supplied to the spark plug. Troubleshoot the fuel system as follows:

1. Clogged fuel tank breather hose

2. Check that there is a sufficient amount of fuel in the rank
3. Start the engine after the following examination. Remove the spark plug, see if there is fuel on the end of it.

   Note the following:

   a. If there is no visible fuel on the end of the spark plug, go to check whether the fuel valve, oil injector or fuel hose is clogged.

   b. If the spark plug at the bottom of a fuel. And the engine has spark. Check for an excessive intake air leak or the possibility of contaminated or stale fuel

NOTE

If the UTV was not used for some time. And was not properly stored. The fuel may have gone stale. Where lighter parts of the fuel have evaporated. Depending on the condition of the fuel. a no-start condition can result

   c. If there is too much fuel on the end of the spark plug, go to check whether there is overflow at the air filter or the ducting damper.

CROSSFIRE

Rich Mixture

The following conditions can cause a rich air/fuel mixture:

1. Air pressure sensor, oxygen sensor, solar term door position sensor fault
2. ECU program error or damage

Lean Mixture

The following conditions can cause a lean air/fuel mixture:

1. The injector is clogged
2. The pump pressure is not enough
3. ECU program chaos
4. ECU damage
5. The pressure sensor, oxygen sensor, solar term door position sensor fault

ENGINE

Engine Smoke

The color of engine smoke can help diagnose engine problems or operating conditions

Black smoke

Black smoke is an indication of a rich air/fuel mixture

Blue smoke

Blue smoke indicates that the engine is burning oil in the combustion chamber as it leaks past worn valve stem seals and piston rings. Excessive oil consumption is another indicator of an engine that is burning oil. Perform a compression test to isolate the problem.

White smoke or steam

It is normal to see white smoke or steam from the exhaust after first starting the engine in cold weather. This is actually condensed steam formed by the engine during combustion. If the UTV is ridden far enough, the water cannot collect in the crankcase and should not become a problem. Once the engine heats up to normal operating temperature, the water evaporates and exits the engine through the crankcase vent system. However, if the UTV is ridden for short trips or repeatedly started and stopped and allowed to cool off without the engine getting warm enough, water will start to collect in the crankcase. With each short run of the engine, more water collects. As this water mixes with the oil in the crankcase, sludge is produced. Sludge can eventually cause engine damage as it circulates through the lubrication system and blocks off oil passages.

Large amounts of steam can also be caused by a cracked cylinder head or cylinder block surface that allows coolant to leak into the combustion chamber. Perform a Coolant System Pressure Test.

Low Engine Compression

CROSSFIRE

Problems with the engine top end will affect engine performance. When the engine is suspect, perform the leak down procedure in this chapter and make a compression test . Interpret the results as described in each procedure to troubleshoot the suspect area. An engine can lose compression through the following areas:

1. Valves:
   a. The gap between the valve is not suitable.
   b. Incorrect valve timing.
   c. Worn or damaged valve seat surfaces.
   d. Bent valves.
   e. Weak or broken valve springs.
2. Cylinder head:
   a. Loose spark plug or damaged spark plug hole.
   b. Damaged cylinder head gasket.
   c. Warped or cracked cylinder head.
3. The pressure relief system is damaged.

High Engine Compression

1. The pressure relief system malfunction.
2. Excessive carbon buildup in the combustion chamber.

Engine Overheating

(Cooling System)

WARNING

Do not remove the radiator cap, coolant drain plug or disconnect any coolant hose immediately after or during engine operation. Scalding fluid and steam may be blown out under pressure and cause serious injury. When the engine has been operated, the coolant is very hot and under pressure. Attempting to remove the items when the engine is hot can cause the coolant to spray violently from the radiator, water pump or hose, causing severe burns and injury.

1. Low coolant level.
2. Air in cooling system.
3. Clogged radiator, hose or engine coolant passages.
4. Worn or damaged radiator cap.
5. Damaged water pump.

Engine Overheating

(Engine)

CROSSFIRE

1. Improper spark plug heat range.
2. Low oil level.
3. Oil not circulating properly.
4. Valves leaking.
5. Heavy carbon deposits in the combustion chamber.
6. Dragging brake(s).
7. Slipping clutch.

The Ignition Advance Angle Is Too Large

Preignition is the premature burning of fuel and is caused by hot spots in the combustion chamber. Glowing deposits in the combustion chamber, inadequate Cooling or an overheated spark plug can all cause preignition. This is first noticed as a power loss but eventually causes damage to the internal parts of the engine because of the high combustion chamber temperature.

Detonation

Detonation is the violent explosion of fuel in the combustion chamber before the proper time of ignition. Using low octane gasoline is a common cause of detonation.

Even when using a high octane gasoline, detonation can still occur. Other causes are over-advanced ignition timing, lean air/fuel mixture at or near full throttle, inadequate engine cooling, or the excessive accumulation of carbon deposits in the combustion chamber.

Continued detonation can result in engine damage.

Power Loss

Refer to Poor Engine Performance in this chapter.

Engine Noises

Unusual noises are often the first indication of a developing problem. Investigate any new noises as soon as possible. Something that may be a minor problem, if corrected, could prevent the possibility of more extensive damage.

Use a mechanic's stethoscope or a small section of hose held near your ear (not directly on your ear) with the other end close to the source of the noise to isolate the location. Determining the exact cause of a noise can be difficult. If this is the case, consult with a professional mechanic to determine the cause. Do not disassemble major components until all other possibilities have been eliminated.

Consider the following when troubleshooting engine noises:

1. Knocking or pinging during acceleration can be caused by using a lower octane fuel than recommended. May also be caused by poor fuel. Pinging can also be caused by an incorrect spark plug heat range or carbon buildup in the combustion chamber.
2. Slapping or rattling noises at low speed or during acceleration—May be caused by excessive piston-to-cylinder wall clearance (piston slap).

NOTE

Piston slap is easier to detect when the engine is cold and before the piston has expanded. Once the engine has warmed up, piston expansion reduces piston-to-cylinder clearance.

3. Knocking or rapping while decelerating—Usually caused by excessive rod bearing clearance.
4. Persistent knocking and vibration occurring every crankshaft rotation—Usually caused by worn rod or main bearing(s). Can also be caused by broken piston rings or a damaged piston pin.
5. Rapid on-off squeal—Compression leak around cylinder head gasket or spark plug(s).
6. Valve train noise—Check for the following:
   a. Excessive valve clearance.
   b. Worn or damaged camshaft.
   c. Damaged camshaft.
   d. Worn or damaged valve train components.
   e. The valve hose hole is damaged
   f. The valve sticks on the hose
   g. Broken valve spring.
   h. Low oil pressure.
   i. Clogged cylinder oil hole or oil passage.

ENGLNE LUBRICATION

Mis-operation of the engine lubrication system will cause the engine scrap.Check the lubrication oil level and pressure of the engine.

High Oil Consumption or Excessive

Exhaust Smoke

1. Worn valve guides.
2. Worn valve guide seals.
3. Worn or damaged piston rings.
4. Incorrect piston ring installation.

Low Oil Pressure

1. Low oil level.
2. Worn or damaged oil pump.
3. Clogged oil strainer screen.
4. Clogged oil filter.
5. Internal oil leakage.
6. Oil relief valve stuck open.
7. Incorrect type of engine oil.

CROSSFIRE

High Oil Pressure

1. The lubrication oil pressure valve is stuck and closed.
2. Clogged oil filter.
3. Clogged oil gallery or metering orifices.

No Oil Pressure

1. Low oil level.
2. The lubrication oil pressure valve is stuck and closed.
3. Damaged oil pump.
4. Incorrect oil pump installation.
5. Internal oil leak.

Oil Level Too Low

1. The lubrication oil does not keep at the normal level.
2. Worn piston rings.
3. Worn cylinder.
4. Worn valve guides.
5. Worn valve guide seals.

6. Piston rings incorrectly installed during engine overhaul.
7. External oil leakage.
8. Oil leaking into the cooling system.

Oil Contamination

1. Blown head gasket allowing coolant to leak into the engine.
2. Coolant leak.
3. Oil and filter not changed at specified intervals or when operating conditions demand more frequent changes.

CYLINDER LEAK DOWN TEST

A cylinder leak down test can accurately pinpoint engine leakage problems from the head gasket, water jackets in the cylinder head and cylinder, valves and valve seats, and piston rings. This test is performed by applying compressed air to the cylinder through a special tester and then measuring the percent of leakage. A cylinder leak down tester and an air compressor are needed to perform this test.

When performing a leak down test, the engine is first set at TDC on its compression stroke so that all the valves are closed. When the combustion chamber is pressurized, very little air should escape. However, the difficulty in performing a leak down test on a single cylinder engine(especially on the engines described in this manual with low static engine compression) is in preventing the piston from moving as the combustion chamber starts to pressurize. Any piston movement will force the crankshaft to turn away from TDC and allow air to escape past an open valve seat.

In this procedure it will be necessary to lock the engine at TDC on its compression stroke and then perform the leak down test. Follow the manufacturer's directions along with the follow the manufacturer's directions along with the following information when performing a cylinder leak down test.

1. Support the UTV on a work stand with the rear wheel off the ground.
2. Remove the air filter assembly Open and secure the throttle so it is at its wide-open position.
3. Remove the spark plug.
4. Install the threaded hose adapter from the leak down kit. Then install the leak down gauge onto the hose.
5. Remove the ignition timing hole cap from the left crankcase cover.
6. Remove the crankshaft hole cap from the right crankcase cover.

NOTE

Because the following test is performed with the cylinder head cover installed on the engine, the camshaft lobes cannot be viewed to ensure that the engine is positioned at TDC on its compression stroke. To determine when the engine is approaching TDC on its compression stroke, or whether it is 360°off. Observe the following two indicators to predict engine position. First, when aligning the index marks in Step7, listen for pressure building inside the combustion chamber. Indicating that the piston is moving

to TDC on its compression stroke. Second, view the gauge on the leak down tester when turning the engine. As the piston moves toward TDC on its compression stroke, compression building inside the combustion chamber may cause the gauge needle to move slightly. If the crankshaft is 360°off, these indicators will not be present.

NOTE

The decompress or mechanism will click loudly once during each crankshaft revolution. This is normal.

7. Use hex socket on the primary drive gear mounting bolt and turn the crankshaft clockwise and align the TDC mark on the flywheel with the index mark on the left crankcase cover Remove the hex socket from the primary drive gear.
8. Perform the following to lock the transmission so the engine remains at TDC on its compression stroke when performing the leak down test:

WARNING

Do not attempt to lock the engine by trying to use a tool to hold the Allen bolt on the end of the crankshaft. Once the combustion chamber becomes pressurized, any crankshaft movement can throw the tool away from the engine under considerable force, attempting to hole the tool can cause serious injury. Engine damage may also occur to the crankshaft or right crankcase cover. Lock the engine as described in this procedure.

a. Turn the drive sprocket by hand and shift the transmission into top gear with the shift pedal.
b. Mount a holding tool or equivalent onto the drive sprocket. Use a wooden block and clamp to hold the holding tool so it cannot move when the combustion chamber becomes pressurized.
c. Check that the TDC marks are still aligned as described in Step7,
If not, turn the crankshaft as required, then relock the holding tool in position.

9. Remove the radiator cap and the oil filler cap.
10. Perform a cylinder leak down test by applying air pressure to the combustion chamber. Follow the manufacturer's instructions while reading the percent of leakage on the gauge. Listen for air leaking while noting the following:

NOTE

Because of play in the transmission gears, it is unlikely the engine will stay at TDC on the first try If the crankshaft turns, reposition the countershaft slightly and then relock it in position with the holding tool. After several attempts, you will get a feel of the transmission play and know what direction the countershaft should be turned and locked.

NOTE

If a large amount of air escapes from the exhaust pipe or through the throttle, the air is leaking through on open valve, Check the index mark to make sure the engine is at TDC on the compression stroke, If the engine is remaining at TDC but there is still a large amount of air escaping from the engine, the crankshaft is off one revolution. Turn the engine 360°and realign the TDC mark as described in Step 7, then relock it as described in Step8.

a. Air leaking through the exhaust pipe indicates a leaking exhaust valve.
b. Air leaking through the throttle indicates a leaking intake valve.
c. Air leaking through both the intake and exhaust valves indicates the engine is not set at TDC on its compression stroke.
d. Air leaking through the coolant filler neck indicates a leaking cylinder head gasket or a cracked cylinder head or cylinder liner.
e. Air leaking through the oil filler hole indicates the rings are not sealing properly in the bore.

11. If the cylinder leak down is 10 percent or higher, further service is required.
12. Disconnect the test equipment and install all the parts previously removed.

CROSSFIRE

ELECTRICAL TESTING

This section describes basic electrical testing and test equipment use.

Preliminary Checks and Precautions

Refer to the color wiring diagrams at the end of the manual for component and connector identification; Use the wiring diagrams to determine how the circuit should work by tracing the current paths from the power source through the circuit components to ground. Also, check any circuits that share the same fuse (if used), ground or switch. If the other circuits work properly and the shared wiring is good, the cause must be in the wiring used only by the suspect circuit. If all related circuits are faulty at the same time, the probable cause is a poor ground connection or a blown fuse (if used).

As with all troubleshooting procedures, analyze typical symptoms in a systematic manner. Never assume any thing and do not overlook the obvious like a blown fuse or an electrical connector that has separated. Test the simplest and most obvious items first and try to make tests at easily accessible points on the UTV.

Before starting any electrical troubleshooting, perform the following:

1. Check the fuse if the fuse is blown, replace it.
2. Inspect the battery. Make sure it is fully charged, and the battery leads are clean and securely attached to the battery terminals.
3. Disconnect each electrical connector in the suspect circuit and make sure there are no bent terminals in the electrical connector
4. Make sure the terminals on the end of each wire are pushed all the way into the connector. If not. Carefully push them in with a narrow blade screwdriver
5. Check the wires where they connect to the terminals for damage

6. Make sure all terminals within the connector are clean and free of corrosion. Clean them. If necessary. And pack the connectors with dielectric grease
7. Push the connectors with dielectric grease. The connectors are fully engaged and locked together
8. Never pull the electrical wires when disconnecting an electrical connector-pull only on the connector

Intermittent Problems

Intermittent problems are problems that do not occur all the time and can be difficult to locate. For example. When a problem only occurs when the UTV is ridden over rough roads (vibration) or in wet conditions (water penetration). It is intermit-ten. To locate and repair intermittent problems. Simulate the condition when testing the compo-nets. Note the following:

1. Vibration---This is a common problem with loose or damaged electrical connectors
   a. Perform a continuity test as described in the appropriate service procedure. Or under *Continuity Test* in this section
   b. Lightly pull or wiggle the connectors while repeating the test. Do the same when checking the wiring harness and individual components. especially where the wires enter a housing or connector
   c. A change in meter readings indicates a poor connection. Fine and repair the problem or replace the part. Check for wires with cracked or broken insulation

CROSSFIRE

NOTE

An analog ohmmeter is useful when making this type of test. Slight needle movements are apparent when indicating a loose connection

2. Heat – This is another common problem with connectors or plugs that have loose or poor connections. As these connections heat up. The connection or joint expands and separates. Causing an open circuit. Other heat related problem occur when a component creates its own heat as it starts to fail or go bad
   a. Troubleshoot the problem to help isolate the problem or area
   b. To check a connector. Perform a continuity test as described in the appropriate service procedure. Or under *Continuity test* in this chapter. Then repeat the test while heating the ground. If the lamp comes on. The problem is the connection between the lamp and Connector with a heat gun or hair dryer. If the meter reading was normal (continuity) when the connector was cold, then fluctuated or read infinity when heat was applied, the connection is bad.

c. To check a component, wait until the engine is clod, then start and run the engine. Note operational differences when the engine is cold and hot.

d. If the engine does not start, isolate and remove the component. First test it at room temperature, and then after heating it with a hair dryer. A change in meter readings indicates a temperature problem.

CAUTION

A heat gun or hair dryer will quickly raise the heat of the component being tested. Do not apply heat

directly to the ICM or use heat in excess of 60℃ (140℉) on any electrical component. If available, monitor heat with an infrared thermometer.

3. Water—when this problem occurs in wet conditions, or in areas with high humidity, start and run the engine in a dry area. Then, with the engine running, spray water related problems repair themselves after the component becomes hot enough to dry itself.

Electrical component replacement

Most UTV dealerships and parts suppliers will not accept the return of any electrical part. If you cannot determine the exact cause of any electrical system malfunction. If you purchase a new electrical component(s), install it, and then find that the system still does not work properly, you will probably be unable to return the unit for a refund.

Consider any test results carefully before replacing a component that teats only slightly out of specification, especially resistance. A number of variables can affect test results dramatically. These include: the testing meter's internal circuitry, ambient temperature and conditions under which the machine has been operated. All instructions and specifications have been for accuracy: however. Successful test results depend to a great degree upon individual accuracy.

Test Equipment

A test light can be constructed from a 12-volt light bulb with a pair of test leads carefully soldered to the bulb. To check for battery voltage in a circuit, attach one lead to ground and the other lead to various points along the circuit. The bulb lights when battery voltage is present.

A voltmeter is used in the same manner as the test light to find out if battery voltage is present in any given circuit. The voltmeter, unlike the test light, also indicates how much voltage is present at each test point. When using a voltmeter, attach the positive lead to the component or wire to be checked and the negative lead to a good ground.

Ammeter

An ammeter measures the flow of current (amps) in a circuit when connected in series in a circuit, the ammeter determines if current is flowing through the circuit and if that current flow is excessive because of a short in the circuit. Current flow is often referred to as current draw. Comparing actual current draw in the circuit or component to the manufacturer's specified current draw provides useful diagnostic information.

Self-powered test light

A self-powered test light can be constructed from a 12-volt light bulb, a pair of test leads and a 12-volt battery. When the test leads are touched together, the light bulb should go on.

Use a self-powered test light as follows:

1. Touch the test leads together to make sure the light bulb goes on. If not, correct the problem before using it in a test procedure.
2. Select two points within the circuit where there should be continuity.

3. Attach one lead of the self-powered test light to each point.
4. If there is continuity, the self-powered test light bulb will come on.
5. If there is on continuity, the self-powered test light bulb will not come on, indicating an open circuit.

Ohmmeter

An ohmmeter measures the resistance (in ohms) to current flow in a circuit or component. Like the self-powered test light, an ohmmeter contains its own power source and should not be connected to a live circuit.

Ohmmeter may be analog type (needle scale) or digital type (LCD or LED readout). Both types of ohmmeter have a switch that allows the user to select different ranges of resistance for accurate readings. The analog ohmmeter also has a set-adjust control which is used to zero or calibrate the meter (digital ohmmeters do not require calibration).

An ohmmeter is used by connecting its test leads to the terminals or leads of the circuit or component to be tested. If an analog meter id used, is must be calibrated by touching the teat leads together and turning the set-adjust knob until the meter needle reads zero. When the leads are uncrossed, the needle reads zero. When the leads are uncrossed, the needle should move to the other end of the scale indicating infinite resistance.

During a continuity test, a reading of infinity indicates that there is an open in the circuit or component. A reading of zero indicates continuity, that is, there is no measurable resistance in the meter needle falls between these two ends of the scale, this indicates the actual resistance, multiply the meter reading by the ohmmeter scale. For example, a meter reading of 5 multiplied by the R×100 scale is 5000 ohms of resistance.

CROSSFIRE

CAUTION

Never connect an ohmmeter to a circuit which has power applied to it. Always disconnect the battery negative lead before using an ohmmeter.

Jumper wire

A jumper wire is a simple way to bypass a potential problem and isolate it to a particular point in a circuit. If a faulty circuit works properly with a jumper wire installed, an open exists between the two jumper points in the circuit.

To troubleshoot with a jumper wire, fist use the wire to determine if the problem is on the ground side or the load side of a device. Test the ground by connecting a jumper between the lamp and a good ground. If the lamp does not come on with the jumper installed. The lamp’s connection to ground is good so the problem is between the lamp and the power source.

To isolate the problem. Connect the jumper between the battery and the lamp. If it comes on. The problem is between these two points. Next. Connect the jumper between the battery and the fuse side of the switch. If the lamp comes on. The switch is good. By successively moving the jumper from one point to another. The problem can be isolated to a particular place in the circuit

Pay attention to the following when using a jumper wire:

1. Make sure the jumper wore gauge (thickness) is the same as that used in the circuit being tested. Smaller gauge wire will rapidly overheat and could melt

2. Install insulated boots over alligator clips. This prevents accidental grounding. Sparks or possible shock when working in cramped quarters
3. Jumper wires are temporary test measures only. Do not leave a jumper wire installed as a permanent solution. This creates a severe fire hazard that could easily lead to complete loss off the motorcycle
4. When using a jumper wire always install an inline fuse/fuse holder (available at most auto supply stores or electronic supply stores) to the jumper wire. Never use a jumper wire across any load (a component that is connected and turned on). This would result in a direct short and will blow the fuse(s)

Test Procedures

Voltage test

Unless otherwise specified. Make all voltage tests with the electrical connectors still connected. Insert the test leads into the backside of the connector and make sure the test lead touches the electrical wire or metal terminal within the connector housing. If the test lead only touches the wire insulation. There will be a false treading

Always check both sides of the connector as one side may be loose or corroded. Thus preventing electrical flow through the connector. This type of test can be performed with a test or a voltmeter. A voltmeter gives the best results

CROSSFIRE

NOTE

If using a test light. It does not make any difference which test lead is attached to ground

1. Attach the voltmeter negative test lead to a good ground (bare metal). Make sure the part used for ground is not insulated with a rubber gasket or rubber grommet
2. Attach the voltmeter positive test lead to the point to be tested
3. Turn the ignition switch on. If using a test light. The test light will come on if voltage is present. If using a voltmeter. Note the voltage reading. The reading should be within I volt of battery voltage. If the voltage is less. There is a problem in the circuit

Voltage drop test

The wires. Cables. Connectors and switches in an electrical circuit are designed to carry current with low resistance. This endures that current can flow through the circuit with a minimum loss of voltage. Voltage drop indicates where there is resistance in a circuit. A higher than normal amount of resistance in a circuit decreases the flow of current and cause the voltage to drop between the source and destination in the circuit.

Because resistance causes voltage to drop. A voltmeter is used to measure voltage drop when current is running through the circuit. If the circuit has no resistance. There is no voltage drop so the voltmeter indicates 0 volts. The greater the resistance in a circuit. The greater the voltage drop reading.

To perform a voltage drop:

1. Connect the positive meter test lead to the electrical source (where electricity is coming from).
2. Connect the voltmeter negative test lead to the electrical load (where the electricity is going).
3. If necessary, activate the component(s) in the circuit. For example. If checking the voltage in the starter circuit, it would be necessary to push the starter button.
4. Read the voltage drop (difference in voltage between the source and destination) on the voltmeter. Note the following:
   a. The voltmeter should indicate 0 volts. If there is a drop of 0.5 volts or more. There is a problem within the circuit. A voltage drop reading of 12 volts indicates an open in the circuit.
   b. A voltage drop of 1 or more volts indicates that a circuit has excessive resistance.
   c. For example, consider a starting problem where the battery is fully charged but the starter motor turns over slowly. Voltage drop would be the difference in the voltage at the batter (source) and the voltage at the starter (destination) as the engine is being started (current is flowing through the batter cables). A corroded battery cable would cause a high voltage drop (high resistance) and slow engine cranking.
   d. Common sources of voltage drop are loose or contaminated connectors and poor ground connections.

Peak voltage test

Peak voltage tests check the voltage output of the ignition coil and ignition pulse generator at normal cranking speed. These tests make it possible to identify ignition system problems quickly and accurately.

Peak voltage tests require a peak voltage adapter or tester. See Chapter Ten, Ignition System Testing.

Continuity Test

A continuity test is used to determine the integrity of a circuit, wire or component. A circuit has continuity if it forms a complete circuit, that is, if there are no opens in either the electrical wires or components within the circuit. A circuit with an open. On the other hand, has no continuity.

This type of test can be performed with a self-powered test light or an ohmmeter. An ohmmeter gives the best results. If using an analog ohmmeter, calibrate the meter by touching the leads together and turning the calibration knob until the meter reads zero.

1. Disconnect the negative battery cable.
2. Attach one test lead (test light or ohmmeter) to one end of the part of the circuit to be tested.
3. Attach the other test lead to the other end of the part or the circuit to be tested.
4. The self-powered test lead comes on if there is continuity. An ohmmeter reads 0 or very low resistance if there is continuity. A reading of infinite resistance if there is continuity. A reading of infinite resistance indicates no continuity, the circuit is open.

Testing for a short with a self-powered test light or ohmmeter

1. Disconnect the negative battery cable.

2. Remove the blown fuse.
3. Connect one test lead of the test light or ohmmeter to the load side (battery side) of the fuse terminal in the starter relay.
4. Connect the other test lead to a good ground (bare metal). Make sure the part used for a ground is not insulated with a rubber gasket or rubber grommet.
5. With the self-powered test light or ohmmeter attached to the fuse terminal and ground, wiggle the wiring harness relating to the suspect circuit at various intervals. Start next to the fuse terminals and work away from the fuse terminal. Watch the self-powered test light or ohmmeter while progressing along the harness.
6. If the test light blinks or the needle on the ohmmeter moves, there is a short-to-ground at that point in the harness.

Testing for a short with a test light or voltmeter

1. Remove the blown fuse.
2. Connect the test light or voltmeter across the fuse terminals in the starter relay. Turn the ignition switch ON and check for battery voltage.
3. With the test light or voltmeter attached to the fuse terminals, wiggle the wiring harness relating to the suspect circuit at various intervals. Start next to the fuse terminal a work systematically away from the fuse terminal. Watch the test light or voltmeter while progressing along the harness.
4. If the test light blinks or if the needle on the voltmeter moves, there is a short-to-ground at that point in the harness.

CROSSFIRE

BRAKE SYSTEM

The front and rear brake units are critical to riding performance and safety. Inspect the front and rear brakes frequently and repair any problem immediately. When replacing or refilling the brake fluid, use only DOT 4 brake fluid from a closed container.

Always check the brake operation before riding the motorcycle.

Soft or Spongy Brake Lever or Pedal

Operate the front brake lever or rear brake pedal and check to see if the lever travel distance increases. If the lever travel does increase while being operated, or feels soft or spongy, there may be air in the brake line. In this condition, the brake system is not capable of producing sufficient brake force. When there is an increase in lever or pedal travel or when the brake feels soft or spongy, check the following possible causes:

1. Air in system.

WARNING

If the fluid level drops too low, air can enter the hydraulic system through the master cylinder. Air can also enter the system from loose or damaged hose fittings. Air in the hydraulic system causes a soft or spongy brake lever action. This condition

is noticeable and reduces brake performance. When it is suspected that air has entered the hydraulic system, flush the brake system and bleed the brakes as described in Chapter Fifteen.

2. Low brake fluid level.

WARNING

As the brake pads wear, the brake fluid level in the master cylinder reservoir drops. Whenever adding brake fluid to the reservoir, visually check the brake pads for wear. If it does not appear that there is an increase in pad wear, check the brake hoses, lines and banjo bolts for leaks.

3. Leak in the brake system.
4. Contaminated brake fluid.
5. Plugged brake fluid passages.
6. Damaged brake lever or pedal assembly.
7. Worn or damaged brake pads.
8. Warped brake disc.
10. Contaminated brake pads and disc.

WARNING

A leaking fork seal can allow oil to contaminate the brake pads and disc.

CROSSFIRE

11. Worn or damaged master cylinder cups and/or cylinder bore.
12. Worn or damaged brake caliper piston seals.
13. Contaminated master cylinder assembly.
14. Contaminated brake caliper assembly.
15. Brake caliper not sliding correctly on slide pins.
16. Sticking master cylinder piston assembly.
17. Sticking brake caliper pistons.

Brake Drag

When the brakes drag, the brake pads are not capable of moving away from the brake disc when the brake lever or pedal is released. Any of the following causes, if they occur, would prevent correct brake pad movement and cause brake drag.

1. Warped or damaged brake disc.
2. Brake caliper not sliding correctly on slide pins.
3. Sticking or damaged brake caliper pistons.
4. Contaminated brake pads and disc.
5. Plugged master cylinder port.
6. Contaminated brake fluid and hydraulic passages.
7. Restricted brake hose joint.
8. Loose brake disc mounting bolts.

9. Damaged or misaligned wheel.
10. Incorrect wheel alignment.
11. Incorrectly installed brake caliper.
12. Damaged front or rear wheel.

Hard Brake Lever or Pedal Operation

When applying the brakes and there is sufficient brake performance but the operation of brake lever feels excessively hard, check for the following possible causes:

1. Clogged brake hydraulic system.
2. Sticking caliper piston.
3. Sticking master cylinder piston.
4. Glazed or worn brake pads.
5. Mismatched brake pads.
6. Damaged front brake lever.
7. Damaged rear brake pedal.
8. Brake caliper not sliding correctly on slide pins.
9. Worn or damaged brake caliper seals.

Brake Grabs

1. Damaged brake pad pin bolt. Look for steps or cracks along the pad pin bolt surface.
2. Contaminated brake pads and disc.
3. Incorrect wheel alignment.
4. Warped brake disc.
5. Loose brake disc mounting bolts.
6. Brake caliper not sliding correctly on slide pins.
7. Mismatched brake pads.
8. Damaged wheel bearings.

Brake Squeal or Chatter

1. Contaminated brake pads and disc.
2. Incorrectly installed brake caliper.
3. Warped brake disc.
4. Incorrect wheel alignment.
5. Mismatched brake pads.
6. Incorrectly installed brake pads.
7. Damaged or missing brake pad spring or pad retainer.

Leaking Brake Caliper

1. Damaged dust and piston seals.
2. Damaged cylinder bore.
3. Loose caliper body bolts.

CROSSFIRE

4. Loose banjo bolt.
5. Damaged banjo bolt washers.
6. Damaged banjo bolt threads in caliper body.

Leaking Master Cylinder

1. Damaged piston secondary seal.
2. Damaged piston snap ring/ snap ring groove.
3. Worn or damaged master cylinder bore.
4. Loose banjo bolt washers.
5. Damaged banjo bolt washers.
6. Damaged banjo bolt threads in master cylinder body.
7. Loose or damaged reservoir cap.

CROSSFIRE

SPECIFICATIONS

HOW TO CONVERSION TABLE OF UNIT

（1）How to use conversion table

All the specified documents in this manual are taken SI and Metric as unit. With the following conversion table, metric unit could be conversed into imperial unit.

Sample:

METRIC		MULTIPLY	IMPERIAL
mm		0.03937	=in
2mm	×	0.03937	=0.08in

Conversion table

Conversion between metric and imperial			
	Know unit	Multiply	Product
Torque	m·kg m·kg cm·kg cm·kg	7.233 86.794 0.0723 0.8679	ft·lb in·lb ft·lb in·lb
Weight	kg g	2.205 0.03527	lb oz
Length	km/hr km m m cm mm	0.6214 0.6214 3.281 1.094 0.3937 0.03937	mph mi ft yd in in
Volume/capacity	cc（cm^3） cc（cm^3） lit（liter） lit（liter）	0.03527 0.06102 0.8799 0.2199	oz（IMP liq.） cu·in qt（IMP liq.） gal（IMP liq.）
Others	kg/mm kg/cm^2 Centigrade	55.997 14.2234 9/5（℃）+32	Ib/in psi（lb/in^2） Fahrenheit（°F）

（2）Definition of unit

Unit	Read	Definition	Measurement
mm cm	Millimetre Centimetre	1 mm=10^{-3}Meter 1 cm =10^{-2}Meter	Length Length
kg	Kilogram	1 kg =10^3Gram	Weight
N	Newton	1N=1 kg×meter/$second^2$	Force
N.m kgf.m	Newton meter Meter Kilogram	1 Nm=1Newton×1meter 1 kgf.m =1Meter×1kgf	Torque Torque
Pa N/mm	Pascal Newton per millimeter	1 Pa=1Newton/1$meter^2$ 1 N/mm =1Newton/ millimeter	Pressure Rigid of spring
L cm^3	Litre Cubic centimeter	—	Volume of capacity
r/min	Revolutions per minute	—	Rotational speed

GEBERAR SPECIFICATIONS

Item	Standard
Dimensions :	
Overall length	2,450mm (96.5in)
Overall width	1,300mm（51.2in）
Overall height	1,660mm（65.4in）
Seat height	410mm（16.1in）
Wheelbase	1,780mm（70.1in）
Minimum ground clearance	150 mm（5.9 in）
Minimum turning radius	3,400mm（133.9 in）
Basic weight :	
With oil and full fuel tank	298kg (657lb)
Engine :	
Model	HS1P65MM for HS250UTV-2 HS1P65ML for HS200UTV-2
Engine type	single cylinder 4-stroke, Water cool
Cylinder arrangement	single cylinder
Displacement	229cm^3 for HS250UTV-2 199cm^3 for HS200UTV-2
Bore×stroke	65.5×68mm（2.58×2.68in）for HS250UTV-2 65.5×59mm（2.58×2.32in）for HS200UTV-2
Compression ratio	9.7:1 for HS250UTV-2 9.6±0.1:1 for HS200UTV-2
Starting system	Electric starter
Lubrication system	Pressure and splash lubrication
Engine oil :	
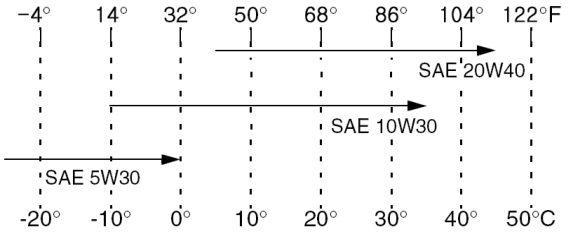	API service SE,SF,SG type or higher
Final gear oil	SAE80 API GL-4 Hypoid gear oil
Differential gear oil	SAE80 API GL-5 Hypoid gear oil
Engine oil	
Periodic oil change	1.10 L（2.325lmp qt,1.162 US qt）
Total amount	1.20 L（2.536 Imp qt, 1.268 US qt）

Item		Standard
Air filter		Wet type element
Fuel		
Type		Unleaded gasoline only
Fuel tank capacity		13.5L（2.97 lmp gal, 3.57 US gal）
Throttle		
Type/quantity		D34/ 1
Spark plug		
Type/manufacturer		DR8EA / 1 (NGK)
Spark plug gap		0.6-0.7 mm（0.024-0.028 in）
Clutch type		CVT, Dry ,centrifugal automatic
Transmission		
Primary reduction system		V-belt
Secondary reduction system		Chain drive
Transmission type		V-belt automatic
Operation		Right hand operation
Single speed automatic		1.58～0.99
Sub transmission ratio	Low	36/13×29/22（3.650）
	High	34/16×29/22（2.801）
Reverse gear		36/13（2.769）
Chassis		
Frame type		Steel tube frame
Trail		41mm（1.61 in）
Toe-in		5 mm （0.20 in）
Tire		
Type		Tubeless
Size	Front	22×7-10
	Rear	22×10-10
Pressure of front wheel		49kpa
Pressure of rear wheel		49kpa
Brake		
Front brake	Type	Dual disc brake
	Operation	Foot operation
Rear brake	Type	Single disc brake
	Operation	Foot operation

CROSSFIRE

Item	Standard
Suspension	
Front suspension	Double wishbone
Rear suspension	Non independent towed
Shock absorber	
Front shock absorber	Coil spring/oil damper/inner airbag absorber
Rear shock absorber	Coil spring/oil damper/ inner airbag absorber
Wheel travel	
Front wheel travel	115mm (4.53 in)
Rear wheel travel	130mm (5.12 in)
Electrical	
Ignition system	EFI
Generator system	A.C. magneto
Battery type	GSU1-9
Battery capacity	12 V, 30.0Ah
Headlight type	H1
Bulb wattage×quantity	
Headlight	12V，35W/35W × 2
Front Position Lamp	12V，5W× 2
Front direction indicator	12V，1W× 2（LED）
Rear direction indicator	12V，1W× 2（LED）
Rear position lamp	12V，1W× 2（LED）
Brake lamp	12V，2W× 2（LED）
L gear	Display
H gear	Display
Neutral	LED
Reverse	Display
Coolant temperature	Code display
Parking brake	LED

CROSSFIRE

ENGINE SPECIFICATIONS

Item	Standard	Limit
Cylinder head		
Warp limit * 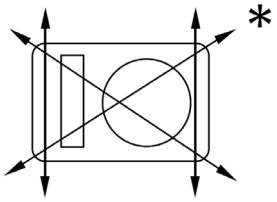	0.03 mm (0.0012 in)	
Cylinder		
Bore size	65.500 ~ 65.515mm	----
Measuring point * 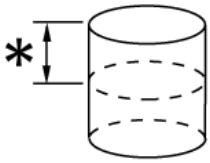	(2.5787~ 2.5793 in) 50 mm (1.97 in)	
Camshaft		
Drive method		----
Cam dimensions 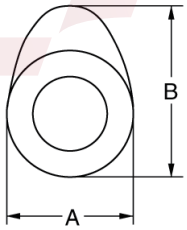		
Intake		
"A"	25.05 ~ 25.15mm (0.986~ 0.990 in)	
"B"	31.25 ~ 31.35mm (1.230 ~ 1.234in)	
Exhaust "A"	24.95~ 25.05mm (0.982~ 0.986in)	
"B"	31.15~31.25 (1.226~1.230)	
Camshaft runout limit 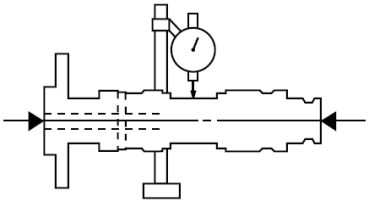	----	

CROSSFIRE

Item		Standard	Limit
Cam chain			
No. of links		102	
Cam chain adjustment method		Automatic	
Rocker arm/rocker arm shaft			
Rocker arm inside diameter		12.011~ 12.018 mm (0.4729 ~ 0.4731 in)	
Shaft outside diameter		11.982~ 11.989 mm (0.4717 ~ 0.4720 in)	----
Arm-to-shaft clearance		0.022 ~ 0.036 mm (0.0009 ~ 0.0014 in)	----
Valve, valve seat, valve guide			
Valve clearance (cold)	IN	0.04~ 0.067 mm (0.0016~ 0.0026in)	----
	EX	0.08 ~ 0.15 mm (0.0031 ~ 0.0059 in)	----
Valve dimensions			

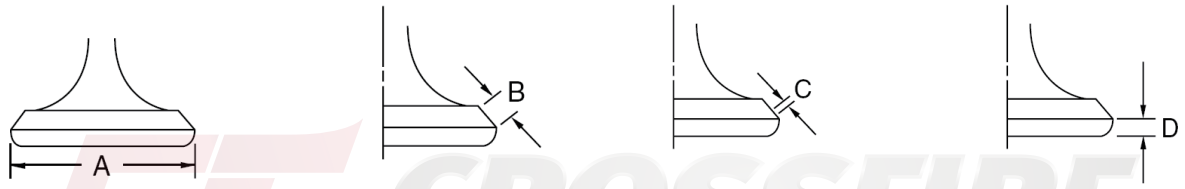

head diameter	face width	seat width	margin thickness
"A" head diameter	IN	33.9~ 34.1mm (1.3346~ 1.3425 in)	----
	EX	28.4 ~ 28.6 mm (1.1181 ~ 1.1260in)	----
"B" face width	IN	3.54 mm (0.1394 in)	----
	EX	2.83 mm(0.1114in)	----
"C" seat width	IN	0.9 ~ 1.1 mm (0.0354 ~ 0.0433 in)	----
	EX	0.9 ~ 1.1 mm (0.0354 ~ 0.0433 in)	----
"D" margin thickness	IN	1.0 ~ 1.4 mm (0.0394 ~ 0.0551 in)	----
	EX	1.2 ~ 1.6mm (0.0472 ~ 0.0630 in)	----
Stem outside diameter	IN	5.450~ 5.465mm (0.2147 ~ 0.2152 in)	----
	EX	5.425~5.455 mm (0.2136 ~ 0.2148 in)	----
Guide inside diameter	IN	5.475 ~ 5.485 mm (0.2156~ 0.2159 in)	----
	EX	5.475 ~ 5.485 mm (0.2156~ 0.2159 in)	----

CROSSFIRE

Item		Standard	Limit
Stem-to-guide clearance	IN	0.010 ~ 0.035 mm (0.0040 ~ 0.0014 in)	0.08 mm (0.0031 in)
	EX	0.020 ~ 0.060 mm (0.0008 ~ 0.0024 in)	0.10 mm (0.0039 in)
Stem runout limit		----	0.01 mm (0.0004 in)
Valve seat width	IN	0.02 mm(0.0008in)	----
	EX	0.02 mm(0.0008in)	----
Valve spring			
Inner spring			
Free length	IN	Inner：39.2mm(1.54in) Outer：44.9mm(1.77in)	---- ----
	EX	Inner：39.2mm(1.54in) Outer：44.9mm(1.77in)	---- ----
Set length (valve closed)	IN	Inner：33.7mm(1.33in) Outer：38.4mm(1.51in)	---- ----
	EX	Inner：33.7mm(1.33in) Outer：38.4mm(1.51in)	---- ----
Compressed pressure (installed)	IN	Inner：75.6~87.0N （7.71~8.88 kg，17.00~19.58 lb） Outer：191.4~220.2N （19.53~22.47 kg，43.06~49.54 lb）	---- ---- ---- ----
	EX	Inner：75.6~87.0N （7.71~8.88 kg，17.00 ~19.58 lb） Outer：191.4～220.2N （19.53~22.47 kg，43.06~49.54 lb）	---- ---- ---- ----
Tilt limit *	IN	----	2.5°/1.4 mm (2.5°/0.055 in)
	EX	----	2.5°/1.6 mm (2.5°/0.063 in)
Direction of winding (top view)	IN	Inner：Counter Clockwise Outer：Clockwise	----
	EX	Inner：Counter Clockwise Outer：Clockwise	----

CROSSFIRE

Item	Standard	Limit
Piston		
Piston to cylinder clearance	0.035~ 0.060 mm (0.0014 ~ 0.0024in)	0.15 mm (0.0059 in)
Piston size “D”	65.455 ~ 65.465mm (2.5770 ~ 2.5774 in)	----
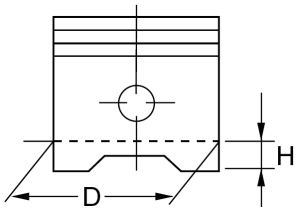		----
Measuring point “H”	10 mm (0.3937 in)	----
Piston off-set	0.5mm(0.0197 in)	----
Off-set direction	Intake side	----
Piston pin bore inside diameter	15.002 ~15.008mm (0.5906 ~ 0.5909in)	----
Piston pin outside diameter	15.005 ~ 15.010 mm (0.5907 ~ 05909 in)	----
Piston rings		
Top ring 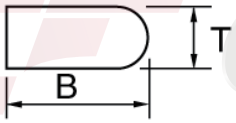		
Type	Barrel	----
Dimensions (B× T)	2.6 ×0.8 mm (0.1024 ×0.0315in)	----
End gap (installed)	0.10 ~ 0.25mm (0.0039~ 0.0098 in)	---- ----
Side clearance (installed)	0.04 ~ 0.08 mm (0.0016 ~ 0.0031 in)	---- ----
2nd ring 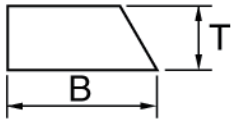		
Type	Taper	---- ----
Dimensions (B × T)	2.6×1.0mm (0.1024~0.0394 in)	
End gap (installed)	0.20 ~ 0.35mm (0.0079 ~ 0.0138in)	---- ----
Side clearance	0.03 ~ 0.07 mm (0.0012 ~ 0.0028 in)	---- ----

CROSSFIRE

Item	Standard	Limit
Oil ring 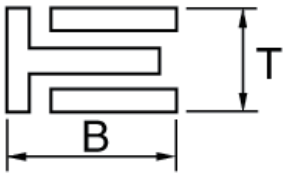 		
Dimensions (B×T)	2.95×2.80mm (0.1161×0.1102in)	----
End gap (installed)	0.20 ~ 0.80 mm (0.0079 ~ 0.0315 in)	----
Side clearance	0.06 ~ 0.15 mm (0.0024 ~ 0.0059 in)	----
Crankshaft 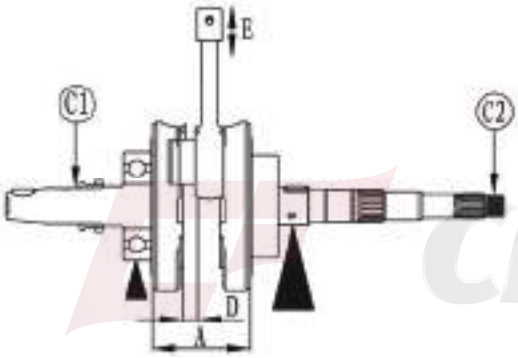 		
Crank width “A”	54.95~ 55mm (2.1634 ~ 2.1654in)	----
Runout limit C1	0.015mm(0.0006in)	0.03 mm
C2	0.015mm(0.0006in)	(0.0012 in)
Big end side clearance “D”	0.15 ~ 0.30 mm (0.0059 ~ 0.0118 in)	0.03 mm (0.0012 in)
Big end radial clearance “E”	0.003 ~ 0.015 mm (0.0001 ~ 0.0059 in)	1.0 mm (0.0394 in)
Automatic centrifugal clutch Clutch engagement speed	2500r/min	

CROSSFIRE

Item	Standard	Limit
Shifter		
Shifter type	Shift drum and guide bar	----
Air filter oil grade	Engine oil	----
Oil pump		
Oil filter type	Chartaceous	----
Oil pump type	Inner and outer rotator	---
Tip clearance	0.15 mm	----
	(0.0059 in)	----
Side clearance	0.03 ~ 0.10 mm	----
	(0.0012 ~ 0.0039 in)	----
Body clearance	0.09 ~ 0.17 mm	----
	(0.0035 ~ 0.0067 in)	----
Oil pressure (hot)	100 Kpa (1.02 kg/cm2, 14.5 psi)	----
	at 1,500 r/min	----
Pressure check location	Cylinder head	----

Water pump		
Type	Single-suction centrifugal pump	----
Reduction ratio	22/18 (1.2)	----
Cooling system		
Radiator core		
Width	355mm (13.98 in)	----
Height	195mm (7.68 in)	----
Thickness	38 mm (1.50 in)	----
Radiator cap opening pressure	107.9 ~ 137.3 Kpa	----
	(1.079~1.373 kg /cm2, 15.35~19.53 psi)	
Radiator capacity	0.6 L (0.5 Imp qt, 0.63 US qt	----
(including all routes)		
Coolant reservoir		
Capacity	0.63 L (0.56 Imp qt, 0.67 US qt)	----
From low to full level	0.20 L (0.18 Imp qt, 0.21 US qt)	----

CROSSFIRE

CHASSIS SPECIFICATIONS

Item		Standard	Limit
Steering system			
Type		Fan gear and gear	----
Front suspension			
Shock absorber travel		91 mm (3.58 in)	----
Spring free length		260 mm (10.24 in)	----
Spring fitting length		243 mm (9.57in)	----
Spring rate		13 N/mm(1.33kg/mm, 72.79lb/in)	----
Stroke		23-92 mm (0.91 ~ 3.62in)	
Rear suspension			
Shock absorber travel		110 mm (4.33 in)	----
Spring free length		255 mm (10.04 in)	----
Spring fitting length		250 mm (9.84 in)	----
Spring rate		11.2 N/mm (1.14 kg/mm, 62.71lb/in)	----
		18.4N/mm (1.88kg/mm, 103.02 lb/in)	----
Stroke		0 ~ 63 mm (0 ~ 2.48 in)	----
		63 ~ 106 mm (2.48 ~ 4.17in)	----
Front wheel			
Type		Aluminum Alloy wheel	----
Rim size		10 ×5.0 AT	----
Rim material		ST12/ZL101A	----
Rim runout limit	radial	----	1.0 mm (0.04in)
	lateral	----	1.0 mm (0.04 in)
Rear wheel			
Type		Aluminum Alloy wheel	----
Rim size		10×8.0 AT	----
Rim material		ST12/ZL101A	----
Rim runout limit	radial	----	2.0 mm (0.08 in)
	lateral	----	2.0 mm (0.08 in)
Brake lever and brake pedal			
Accelerator pedal free play		3 ~ 4mm (0.118 ~ 0.157 in)	----
Brake pedal free play		2 ~ 3mm (0.079 ~ 0.118 in)	----
Parking brake cable free play		2 ~ 3 mm (0.079 ~ 0.118 in)	----

CROSSFIRE

Item	Standard	Limit
Front disc brake		
Type	Dual	----
Disc outside diameter × thickness	160 × 3 mm (6.30 × 0.12 in)	----
Pad thickness inner	8.0 mm (0.31 in)	----
Pad thickness outer	8.0 mm (0.31 in)	----
Master cylinder inside diameter	19.0mm (0.75in)	----
Caliper cylinder inside diameter	25.0mm （0.98in）	----
Brake fluid type	DOT 4	----
Rear disc brake		
Type	Single	----
Disc outside diameter × thickness	200× 3.5 mm (7.87× 0.14in)	----
Pad thickness inner	8.0 mm (0.31 in)	----
Pad thickness outer	8.0 mm (0.31 in)	----
Master cylinder inside diameter	19.0mm (0.75in)	----
Caliper cylinder inside diameter	25.0mm （0.98in）	----
Brake fluid type	DOT 4	----

CROSSFIRE

ELECTRICAL SPECIFICATIONS

Item	Standard	Limit
Voltage	12 V	----
Ignition system		
Ignition timing (BTDC)	8°±1°before TDC	----
Advancer type	ECU Digital type	----
Ignition coil		
Minimum spark gap	6 mm (0.24 in)	----
Primary winding resistance	0.18 ~ 0.28 Ω at 20 °C (68 °F)	----
Secondary winding resistance	6.32 ~ 9.48 kΩ at 20 °C (68 °F)	----
Spark plug cap		
Resistance	4.5~5.0 kΩ	----
High voltage cap		
Resistance	4.5~5.0 kΩ	----
Oxygen sensor		
type	25322728	----
Charging system		
Nominal output	14 V 23 A at 4,500 r/min	----
Charging coil resistance/color	0.32 ~ 0.43Ωat 20 ℃ (68 °F)/White – White – White	----
Rectifier/regulator		
Regulator type	Semi conductor-Switch type	----
No load regulated voltage (DC)	14.1 ~ 14.95 V	----
Capacity	18 A	----
Withstand voltage	200 V	----
Battery		
Specific gravity	1.32	----
Circuit breaker		
Type	Fuse	----
Speedmeter/ECU normal open fuse	5 A×1	
Lighting system fuse	15 A×1	----
Ignition fuse	15 A×1	----
Auxiliary DC jack fuse	10 A×1	----
Relay coil fuse	10A×1	----
Signaling system fuse	10 A×1	----
Backup fuse(odometer)	5 A×1	----
	10 A×1	
	15 A×1	

CROSSFIRE

Item	Standard	Limit
Radiator fan		
Running rpm	2,950 r/min	
Electric starter system		
Type	Constant mesh type	----
Starter motor		----
Output	0.52 kW	----
Armature coil resistance	0.039 ~ 0.044 Ω at 20 °C (68 °F)	----
Brush overall length	11.7 mm (0.46 in)	5 mm(0.20 in)
Spring force	6 ～ 7N (612 ~ 714 g, 21.6 ~ 25.2 oz)	----
Commutator diameter	28.5mm (1.12 in)	27 mm(1.06 in)
Starter relay		
Amperage rating	180 A	----
Coil winding resistance	4.18 ~ 4.62Ω at 20 °C (68 °F)	----

CROSSFIRE

TIGHTENING TORQUES

Engine tightening torques

Part to be tightened	Part name	Thread size	Q'ty	Tightening torque			Remarks
				Nm	m · kg	ft · lb	
Cylinder head	Bolt	M6	1	10	1.0	7.2	
	Bolt	M9	6	38	3.8	27	
Spark plug	—	M12	1	18	1.8	13	
Cylinder head (exhaust pipe)	Stud bolt	M8	4	15	1.5	11	
Cylinder head cover	Bolt	M6	17	10	1.0	7.2	
Tappet cover (exhaust)	—	M32	2	12	1.2	8.7	
Tappet cover (intake)	Bolt	M6	4	10	1.0	7.2	
Oil gallery bolt	—	M6	1	7	0.7	5.1	
Camshaft end cap	Bolt	M6	1	10	1.0	7.2	
Cylinder	Bolt	M6	2	10	1.0	7.2	
	Bolt	M10	4	42	4.2	30	
Balancer driven gear	Nut	M18	1	110	11.0	80	
Timing chain tensioner	Bolt	M6	2	10	1.0	7.2	
Timing chain tensioner cap	Bolt	M6	1	7	0.7	5.1	
Timing chain guide (intake side)	Bolt	M6	2	8	0.8	5.8	
Camshaft sprocket	Bolt	M7	2	20	2.0	14	
Rocker arm shaft stopper	Bolt	M6	2	10	1.0	7.2	
Valve adjusting locknut	—	M6	5	14	1.4	10	
Engine oil drain bolt	—	M14	1	30	3.0	22	
Oil filter cartridge union bolt	—	M20	1	63	6.3	4.6	
Oil filter cartridge	—	M20	1	17	1.7	12	
Oil pipe assembly	Bolt	M6	4	7	0.7	5.1	
Oil delivery pipe 1	Union Bolt	M8	2	18	1.8	13	
Oil delivery pipe 2	Union Bolt	M14	1	35	3.5	25	
Oil delivery pipe 3	Union Bolt	M10	1	20	2.0	14	
Oil delivery pipe 2 and oil delivery pipe 3	Union bolt	M14	1	35	3.5	25	
Relief valve assembly plate	Bolt	M6	2	10	1.0	7.2	
Oil strainer	Bolt	M6	1	10	1.0	7.2	
Oil pump assembly	Bolt	M6	3	10	1.0	7.2	
Intake manifold	Bolt	M6	4	10	1.0	7.2	
Intake manifold screw clamp	—	M5	1	3	0.3	2.1	

CROSSFIRE

Part to be tightened	Part name	Thread size	Q'ty	Tightening torque			Remarks
				Nm	m · kg	ft · lb	
Crankcase	Bolt	M8	3	26	2.6	19	
	Bolt	M6	14	10	1.0	7.2	
	Bolt	M6	1	10	1.0	7.2	
Bearing housing (clutch housing assembly)	Bolt	M6	1	10	1.0	7.2	
Oil seal (engine cooling fan pulley) Retainer	Bolt	M5	2	7	0.7	5.1	
Drive belt case	Bolt	M6	9	10	1.0	7.2	
Drive belt cover	Bolt	M6	14	10	1.0	7.2	
Engine cooling fan	Bolt	M6	2	7	0.7	5.1	
Air shroud 2 and A.C. magneto cover	Bolt	M6	4	10	1.0	7.2	
Engine cooling fan pulley	Bolt	M10	1	55	5.5	40	
Engine cooling fan air duct assembly	Bolt	M6	1	7	0.7	5.1	
Stator assembly	Screw	M6	3	7	0.7	5.1	
Pickup coil	Bolt	M5	2	7	0.7	5.1	
Stator lead holder	Bolt	M6	2	10	1.0	7.2	
A.C. magneto cover	Bolt	M6	12	10	1.0	7.2	
Starter clutch	Bolt	M8	3	30	3.0	22	
Clutch carrier assembly	Nut	M22	1	160	16.0	115	Stake
Clutch housing assembly	Bolt	M6	9	10	1.0	7.2	
Bearing retainer (middle drive shaft)	Screw	M8	4	29	2.9	21	
Middle drive pinion gear	Nut	M22	1	145	14.5	105	Stake
Middle drive shaft bearing housing	Bolt	M8	4	32	3.2	23	
Middle driven pinion gear bearing Retainer	Nut	M60	1	110	11.0	80	Left-hand threads
Middle driven pinion gear bearing Housing	Bolt	M8	4	25	2.5	18	
Primary sheave assembly	Nut	M16	1	120	12.0	85	
Primary pulley sheave cap	Screw	M4	8	3	0.3	2.2	
Secondary sheave assembly	Nut	M16	1	100	10.0	72	
Secondary sheave spring retainer	Nut	M36	1	90	9.0	65	
Shift lever cover	Bolt	M6	4	10	1.0	7.2	
Shift lever 2 assembly	Bolt	M6	1	14	1.4	10	
Shift drum stopper	Bolt	M6	1	18	1.8	13	
Shift arm	Bolt	M6	1	14	1.4	10	
Select lever unit	Bolt	M6	3	15	1.5	11	
Plug (right crankcase)	—	M14	1	18	1.8	13	
Water pump assembly	Bolt	M6	2	10	1.0	7.2	
Water pump housing cover	Bolt	M6	2	12	1.2	8.7	
Coolant drain bolt	—	M6	1	10	1.0	7.2	
Coolant inlet joint	Bolt	M6	2	10	1.0	7.2	
Coolant outlet joint	Bolt	M6	2	10	1.0	7.2	
Air bleed bolt (coolant outlet joint)	—	M6	1	9	0.9	6.5	

CROSSFIRE

Part to be tightened	Part name	Thread size	Q'ty	Tightening torque			Remarks
				Nm	m.kg	ft · lb	
Coolant reservoir	Bolt	M6	2	7	0.7	5.1	
Radiator bracket and frame	Bolt	M6	4	7	0.7	5.1	
Fuel pump	Bolt	M6	2	7	0.7	5.1	
Fuel tank	Bolt	M8	2	30	3.0	22	
Muffler stay	Bolt	M6	2	11	1.1	8.0	
Muffler and exhaust pipe	Bolt	M8	1	20	2.0	14	
Muffler bracket and muffler	Bolt	M8	2	20	2.0	14	
Muffler bracket and frame	Bolt	M8	2	20	2.0	14	
Muffler damper and muffler	Bolt	M6	1	10	1.0	7.2	
Muffler damper and frame	Bolt	M6	1	10	1.0	7.2	
Exhaust pipe	Nut	M8	2	14	1.4	10	
Air duct assembly 1	Bolt	M6	2	7	0.7	5.1	
Air duct assembly 2 and left protector	Bolt	M6	1	7	0.7	5.1	
Air duct assembly 2 and frame	Bolt	M6	1	7	0.7	5.1	
Gear position switch	Bolt	M5	2	7	0.7	5.1	
Thermo switch 1 (cylinder head)	—	1/8	1	8	0.8	5.8	
Thermo switch 3 (radiator)	—	M18	1	28	2.8	20	
Reverse switch	—	M10	1	20	2.0	14	
Engine ground lead	Bolt	M6	1	10	1.0	7.2	
Starter motor and engine	Bolt	M6	2	10	1.0	7.2	

CROSSFIRE

.

Chassis tightening torques

Part to be tightened	Thread size	Tightening torque			Remarks
		Nm	m · kg	ft · lb	
Engine and Rubber connecting bracket 2 (front)	M10	52	5.2	37	
	M6	10	1.0	7.2	
Engine and Rubber connecting bracket 1 (rear)	M8	33	3.3	24	
	M6	10	1.0	7.2	
Rear knuckle and rear lower arm	M10	45	4.5	32	
Rear shock absorber and frame	M10	45	4.5	32	
Rear shock absorber and rear lower arm	M10	45	4.5	32	
Universal joint yoke and drive pinion gear	M14	62	6.2	45	
Ring gear bearing housing and final drive gear case	M8	23	2.3	17	
	M10	40	4.0	29	
Ring gear stopper nut	M8	16	1.6	11	
Bearing retainer and final gear pinion gear bearing housing	M65	170	17.0	125	Left-hand threads
Coupling gear and final drive pinion gear	M12	80	8.0	58	
Front upper arm and frame	M10	45	4.5	32	
Front lower arm and frame	M10	45	4.5	32	
Front shock absorber and frame	M10	45	4.5	32	
Front shock absorber and front upper arm	M10	45	4.5	32	
Steering shaft assembly and steering Cross gimbal	M8	22	2.2	16	
Steering assembly and steering Cross gimbal	M8	22	2.2	16	
Steering assembly and frame	M10	48	4.8	35	
Steering shaft assembly and frame	M8	21	2.1	15	
Steering wheel and steering shaft assembly	M12	35	3.5	25	
Steering knuckle and front upper arm	M12	30	3.0	22	
Steering knuckle and front lower arm	M12	30	3.0	22	
Tie-rod locknut	M12	40	4.0	29	
Steering knuckle and tie-rod	M12	39	3.9	28	
Front lower arm protector board and front lower arm	M6	7	0.7	5.1	
Seat belt and frame	M10	59	5.9	43	
Seat belt and ceiling (enclosure)	7/16	59	5.9	43	
Front wheel and front wheel hub	M10	55	5.5	40	
Front wheel hub and constant velocity joint of half shaft	M20	260	26.0	190	Stake
Steering knuckle and brake disc guard	M6	7	0.7	5.1	
Front brake caliper and front wheel steering knuckle	M10	48	4.8	35	
Front brake hose union bolt	M10	27	2.7	19	
Front brake hose holder and steering knuckle	M6	7	0.7	5.1	
Front brake hose holder and front upper arm	M6	7	0.7	5.1	
Front brake hose holder and frame	M6	7	0.7	5.1	
Front brake pad holding bolt	M8	18	1.8	13	
Front brake disc and front wheel hub	M8	30	3.0	22	
Front brake caliper bleed screw	M6	6	0.6	4.3	

JT CROSSFIRE

Part to be tightened	Thread size	Tightening torque			Remarks
		Nm	m · kg	ft · lb	
Rear wheel and rear wheel hub	M10	55	5.5	40	
Rear wheel hub and constant velocity joint of half shaft	M20	260	26.0	190	Stake
Rear brake hose and frame	M6	7	0.7	5.1	
Brake pipe and brake master cylinder	M10	19	1.9	13	
Pedal holder assembly and frame	M8	16	1.6	11	
Brake master cylinder and pedal holder assembly	M8	16	1.6	11	
Secondary brake master cylinder kit stopper bolt	M6	9	0.9	6.5	
Brake rod locknut	M8	17	1.7	12	
Rear brake disc and brake disc Install seat	M6	10	1.0	7.2	
Rear brake pad holding bolt	M8	17	1.7	12	
Rear brake caliper and Install seat	M10	40	4.0	29	
Rear brake hose union bolt	M10	27	2.7	19	
Parking brake case and rear brake caliper	M8	22	2.2	16	
Parking brake lever assembly and frame	M6	7	0.7	5.1	
Rear brake caliper bleed screw	M6	5	0.5	3.6	
Upper instrument panel and frame	M6	7	0.7	5.1	
Support frame (enclosure) and frame	M10	64	6.4	46	
Support frame (enclosure) and side frame (enclosure)	M10	64	6.4	46	
Top frame (enclosure) and side frame (enclosure)	M10	64	6.4	46	
Seat support and frame	M8	16	1.6	11	
Footrest plate and frame	M6	7	0.7	5.1	

CROSSFIRE

GENERAL TIGHTENING TORQUE SPECIFICATIONS

This chart specifies tightening torques for standard fasteners with a standard ISO thread pitch. Tightening torque specifications for special components or assemblies are provided for each chapter of this manual. To avoid warpage, tighten multi-fastener assemblies in a crisscross pattern and progressive stages until the specified tightening torque is reached. Unless otherwise specified, tightening torque specifications require clean, dry threads. Components should be at room temperature.

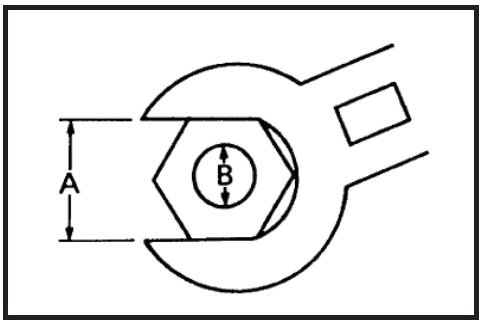

A: Distance between flats

B: Outside thread diameter

CROSSFIRE

A (nut)	B (bolt)	General tightening torques		
		Nm	m · kg	ft · lb
10 mm	6 mm	6	0.6	4.3
12 mm	8 mm	15	1.5	11
14 mm	10 mm	30	3.0	22
17 mm	12 mm	55	5.5	40
19 mm	14 mm	85	8.5	61
22 mm	16 mm	130	13.0	94

LUBRICATION PIONTS AND LUBRICANT TYPES

Engine

Lubrication points	Lubricant
Oil seal lips	Apply lithium-soap-based grease
Bearings	Apply engine oil
O-rings	Apply lithium-soap-based grease
Piston, piston ring	Apply engine oil
Piston pin	Apply engine oil
Buffer boss and balancer drive gear	Apply engine oil
Crankshaft seal and spacer	Apply engine oil
Valve stem	Apply molybdenum disulfide oil
Valve stem end	Apply molybdenum disulfide oil
Rocker arm shaft	Apply engine oil
Rocker arm	Apply molybdenum disulfide grease
Camshaft lobe and journal	Apply molybdenum disulfide grease
Oil pump assembly	Apply engine oil
Oil filter cartridge O-ring	Apply lithium-soap- based grease
Starter idle gear shaft	Apply molybdenum disulfide grease
Starter wheel gear	Apply engine oil
Clutch housing assembly shaft end	Apply lithium-soap- based grease
Clutch carrier assembly	Apply engine oil
One-way clutch bearing	Apply molybdenum disulfide grease
Middle driven shaft splines	Apply molybdenum disulfide oil
Drive axle, driven sprocket, high wheel gear, and low wheel gear	Apply molybdenum disulfide oil
Middle drive gear and clutch dog shift fork groove	Apply molybdenum disulfide oil
Driven chain/sprocket	Apply engine oil
Shift drum	Apply engine oil
Shift fork guide bar	Apply engine oil
Shift drum stopper ball	Apply engine oil
Shift lever 2 assembly	Apply lithium-soap- based grease
Shift lever 1	Apply engine oil
Shift lever 1 and shift lever 2 assembly mating surface	Apply engine oil

CROSSFIRE

CHASSIS

Lubrication points	Lubricant
Lip of oil seal (full)	Light lithium-base grease
o-ring(full)	Light lithium-base grease
Steering shaft (upper end ,lower end)	Light lithium-base grease
Ball connection of steering pushing rod	Light lithium-base grease
Front wheel fork(ball-shaped joint)	Light lithium-base grease
Front wheel bearing	Grease used for bearing
Front & rear brake	Light lithium-base grease
Dust-proof ring of brake	Light lithium-base grease
Joint of front brake cable	Light lithium-base grease
Front brake lever axle and rear brake lever axle	Light lithium-base grease
Adjusting nut and pin of front brake cable	Light lithium-base grease
Adjusting nut and pin of rear brake cable	Light lithium-base grease
Rear brake pedal pivot and brake pedal axle hole	Light lithium-base grease
Throttle rotating frame shaft and end section of throttle cable	Light lithium-base grease
Reverse gear lever pivot	Light lithium-base grease
Connection bolt of rear wheel fork and frame,rear wheel fork bearing	Light lithium-base grease
Rubber sleeve and rear wheel fork	Seal gum
Rear shock absorber bushing	Light lithium-base grease

CROSSFIRE

HYDROGRAPHIC CHART

Hydrographic chart

⇨ : Pressure

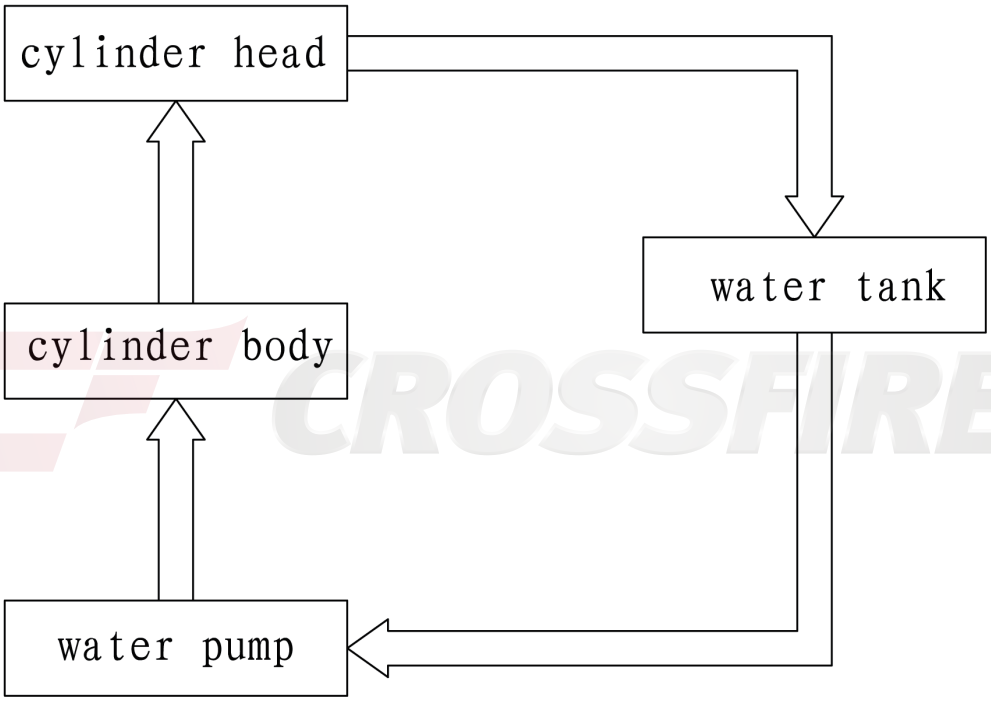

CROSSFIRE

LUBRICATION OIL WAY

LUBRICATION OIL WAY

⇨ : Pressure

→ : splashing oil

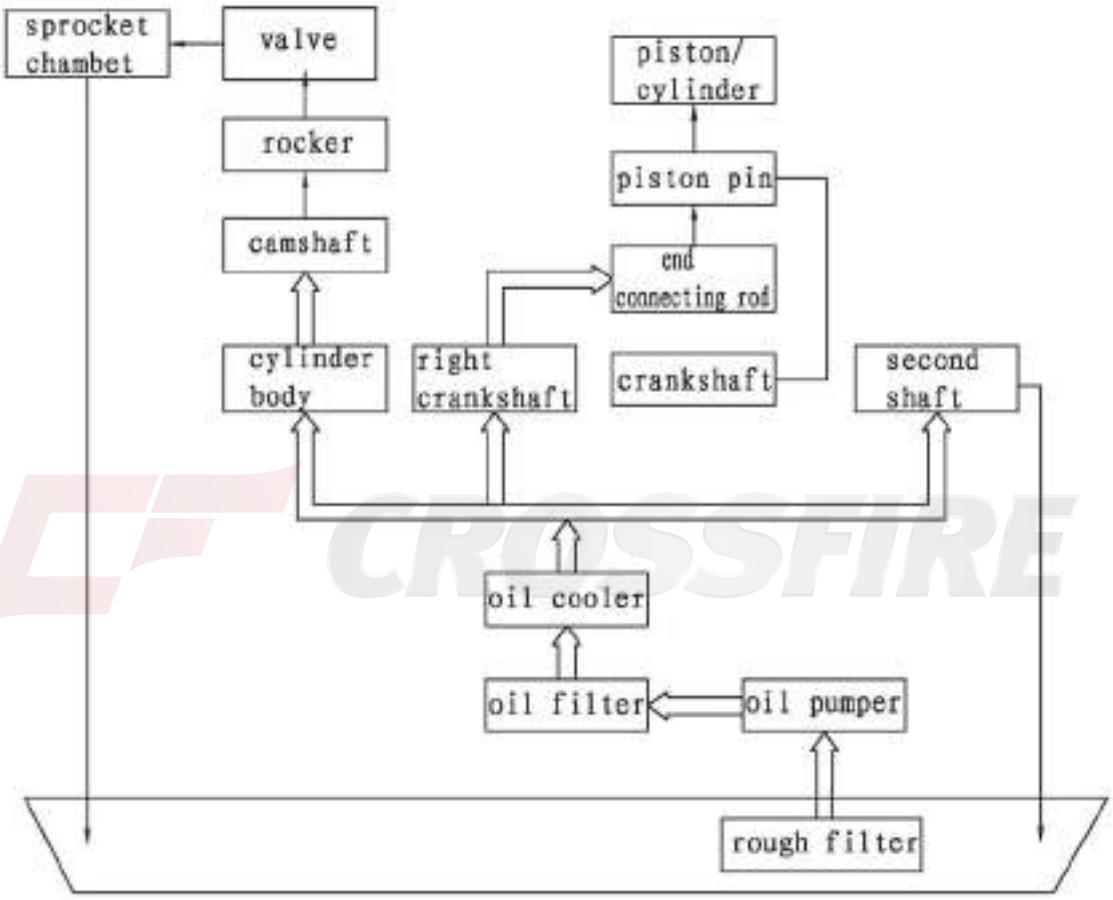

CROSSFIRE

MAINTENCE AND ADJUSTMENT OF THE UTV

NOTE:

The correct maintenance and adjustment are necessary to ensure vehicle and normal driving
The repair personnel should be familiar with the contents of this article.

MAINTENANCE SCHEDULE

ITEM	ROUTINE	Whichever comes first ⇨	EVERY			INITAL	
		month	1	3	6	6	12
		km	320	1,200	2,400	2,400	4,800
		(mi)	(200)	(750)	(1,500)	(1,500)	(3,000)
		hours	20	75	150	150	300
Exhaust system*	• Check for leakage. • Tighten if necessary. • Replace gasket(s) if necessary.				○		○
Spark arrester	• Clean.				○	○	○
Fuel line*	• Check fuel hose for cracks or damage. • Replace if necessary.				○	○	○
Air filter element	• clean. • Replace if necessary.		Every20-40hours （More often in wet of dusty areas.）				
Front brake*	• Check operation/ fluid leakage. • Correct if necessary.		○	○	○	○	○
Rear brake*	• Check operation. • Adjust if necessary.		○	○	○	○	○
Wheel	• Check balance/damage/ • Repair if necessary.		○		○	○	○
Front and rear suspension*	• Check operation. • Correct if necessary.				○		○
Wheel bearing*	• Check bearing assemblies for looseness /damage. • Replace if necessary.		○		○	○	○
Steering system*	• Check operation./Replace if damaged • check toe-in./Adjust if necessary.		○	○	○	○	○
Select lever safety system cable	• Check operation. • Adjust if necessary.				○	○	○
Drive shaft universal joint*	• Lubricate with lithium–soap–based grease.				○	○	○
Axle boots*	• Check operation. • Replace if damaged.		○	○	○	○	○
Fittings and fasteners*	•Check all chassis fittings and fasteners. • Correct if necessary.		○	○	○	○	○
Valves	• Check valve clearance. • Adjust if necessary.		○		○	○	○

CROSSFIRE

Spark plug	• Check condition. • Adjust gap and clean. • Rep; ace if necessary.	○	○	○	○	○
V-belt*	• Check operation. • Check for cracks or damage.	○		○	○	○
Crankcase breather system*	• Check breather hose for cracks of damage. • Replace if necessary.			○	○	○
Engine oil	• Replace.(Warm engine before draining.)	○		○	○	○
Engine oil strainer*	• Clean.	○	○	○		○
Engine oil filter cartridge	• Replace.	○	○	○		○
Lights and switches*	• Check operation. • Adjust headlight beams.	○	○	○	○	○

NOTE:

- **Recommended brake fluid: DOT 4**
- **Brake fluid replacement:**
- **When disassembling the master cylinder or caliper, replace the brake fluid. Normally check the brake fluid level and add fluid as required.**
- **On the inner parts of the master cylinder and caliper, replace the oil seals every two years.**
- **Replace the brake hoses every four years, or if cracked or damaged.**

CFMOTO CROSSFIRE

ENGINE

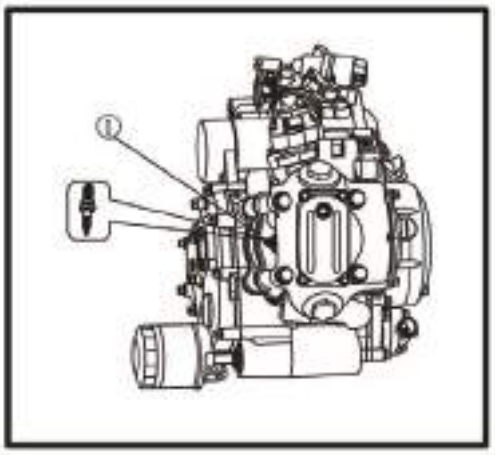

Adjusting the valve clearance

NOTE:

- **The valve clearance must be adjusted when the engine is cool to the touch.**
- **Adjust the valve clearance when the piston is at the Top Dead Center TDC on the compression stroke.**
- **Remove:**
- **driver seat**
- **passenger seat**
- **engine cover board**

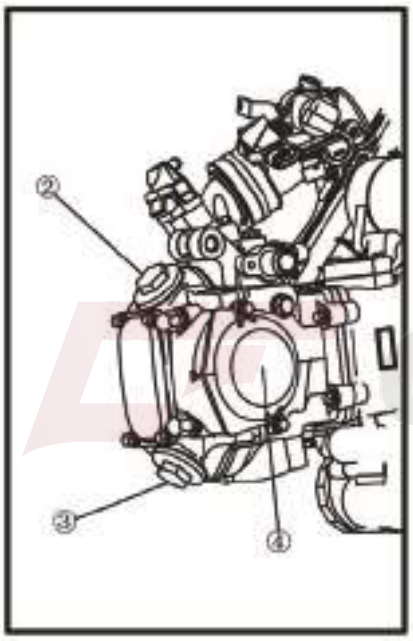

1. Remove following parts：

① spark plug

② air-intake valve cover

③ exhaust valve cover

④ timing chain cover

⑤ small hand hole cover

⑥ big hand hole cover

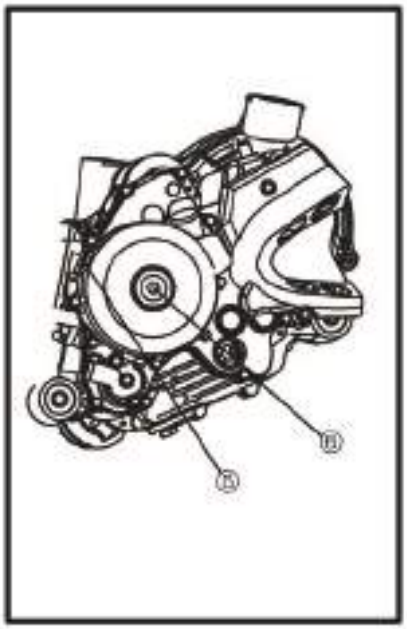

CROSSFIRE

2. Check:
- valve clearance
- Beyond the standard → Adjust.

Valve clearance (cold)
Intake
0.08 ~ 0.12 mm
(0.0031 ~ 0.0047 in)
Exhaust
0.10 ~ 0.14 mm
(0.0047 ~ 0.0063 in)

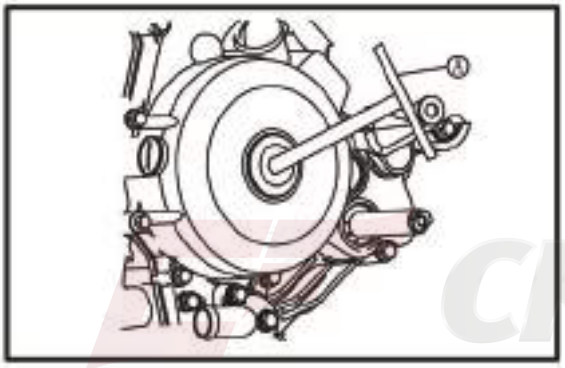

3. calibration

adjusting tools Ⓐ

Spin the crank, when the rotoflex's scale shows 1, it is cylinder 1's timing.

CROSSFIRE

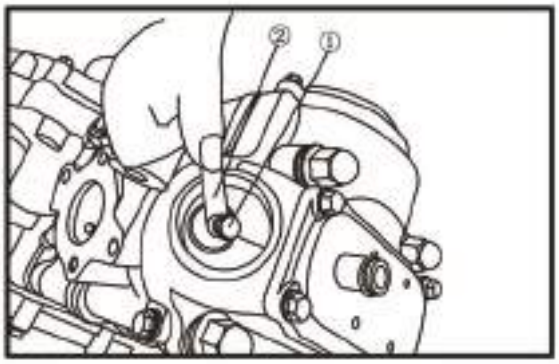

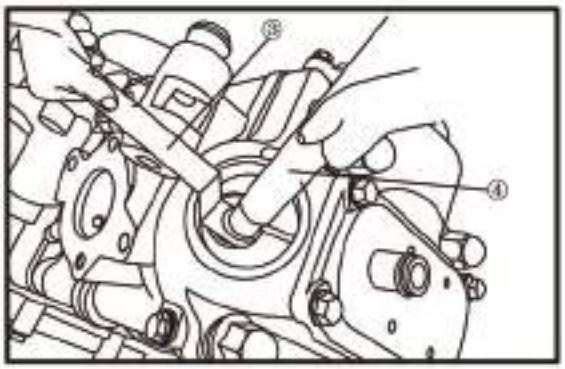

4. Adjust the valve clearance of cylinder .

valve clearance

① Pin lock nut

② Valve thickness gauge（gap Regulation）

③ Regulator

④ Adjust tools

- Loosen the locknut ①.
- Insert a thickness gauge ② between the adjuster end and the valve end.
- Turn the adjuster ③ clockwise or counterclockwise with the tappet adjusting tool ④until the proper clearance is obtained.
- in order to avoid adjuster rotating along, fix the lock nut after finishing

Fixed nut
14 Nm(1.4 m·kgf, 10 ft·lbs)

- Measuring clear
- Measure the clearance of valve with gap gauge.
- If the gap beyond the standard value, repeat the above steps until the correct gap.

5. Install all removed parts

According to remove the reverse order for installation

① big hand hole cover

② small hand hole cover

③ timing chain cover

④ exhaust valve cover

⑤ air-intake valve cover

⑥ spark plug

⑦ engine cover board

⑧ passenger seat

⑨ driver seat

Refer to “SEATS” in chapter 5.

CROSSFIRE

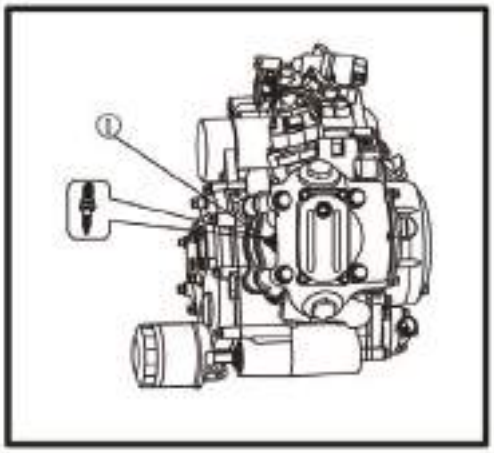

CHECKING THE SPARK PLUG

1. dismount the seat and engine cover board.
2. Remove:
   pull out the spark plug cap ①
3. Check:
   • spark plug type
   Incorrect → Replace.

Standard spark plug
DR8EA/NGK

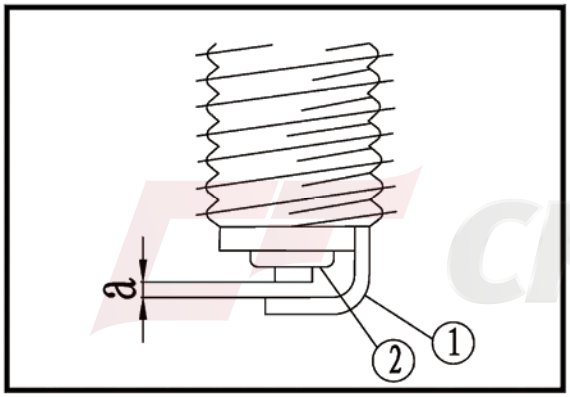

4. Check:
   • electrode ①
   To check if it is burned blunt or much carbon is there, then check the pole clearance by thickness gauge. It is qualified if the pole clearance is between 0.8 to 0.9mm. Otherwise it should be adjusted.
   Wear/damage → Replace.
   • insulator ②
   Abnormal color → Replace.
   Normal color is a medium-to-light tan color.
5. Clean the spark plug with a spark plug cleaner or wire brush.
6. Install:
   • spark plug

17.5 Nm(1.75 m·kgf, 12.7 ft·lbs)

   • Then hook up the spark plug cap.

NOTE:

Before installing a spark plug, clean the gasket surface and plug surface.

7. Install:
   • engine cover board
   • passenger seat
   • driver seat

CROSSFIRE

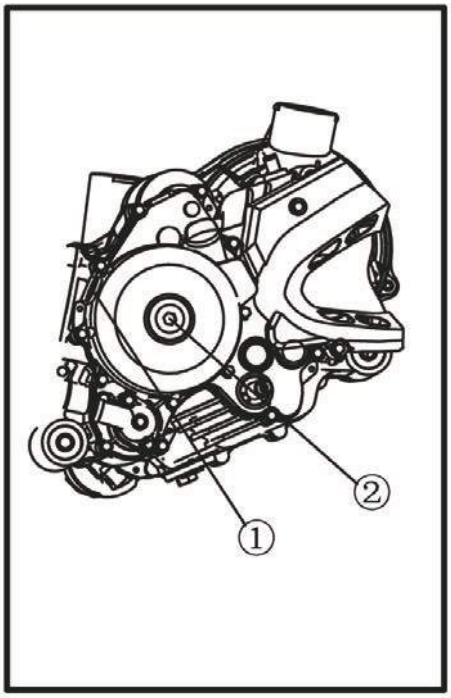

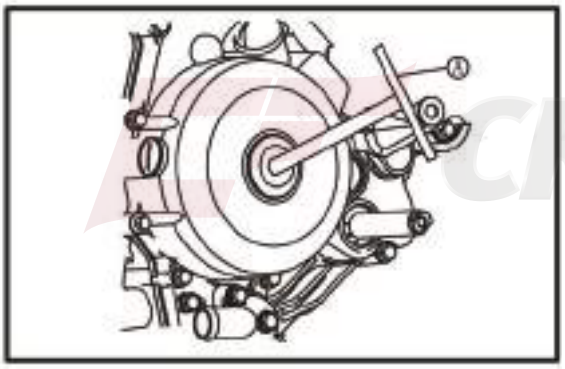

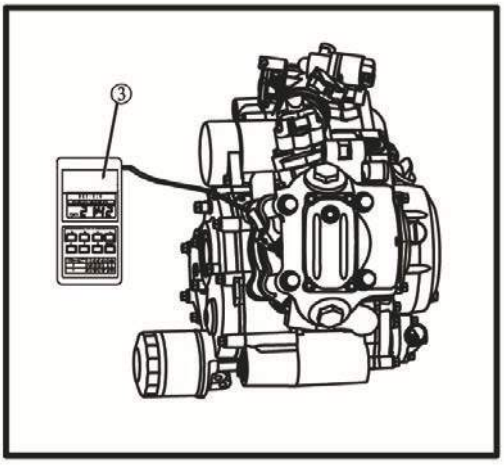

CHECKING THE IGNITION TIMING

NOTE:

before checking the ignition timing, adjust the engine's racing speed and throttle cable.

1. Remove:
   - driver seat
   - passenger seat
   - engine cover board

   Refer to "SEATS" in chapter 5.

2. Attach:
   - Engine tachometer ③

   (to the spark plug lead)

3. Remove:

   Refer to remove manual starting mechanism ②、① name

4. Check:
   - Engine tachometer

a. worm up the engine at specified speed

Engine speed
1,400 ~ 1,500 r/min

b. Visually check the stationary pointer ① to verify it is within the required firing range indicated on the flywheel.

Incorrect firing range → Check the pulser coil assembly.

c. Install the timing plug.

5. Install:
   - Engine manual starting mechanism

7 Nm (0.7 m · kg, 5.1 ft · lb)

6. Install:
   - manual starting mechanism cover

10 Nm (1.0 m · kg, 7.2 ft · lb)

7. Detach:
   - timing light

8. Install:
   - engine cover board
   - passenger seat
   - driver seat

   Refer to "SEATS" in chapter 5.

CROSSFIRE

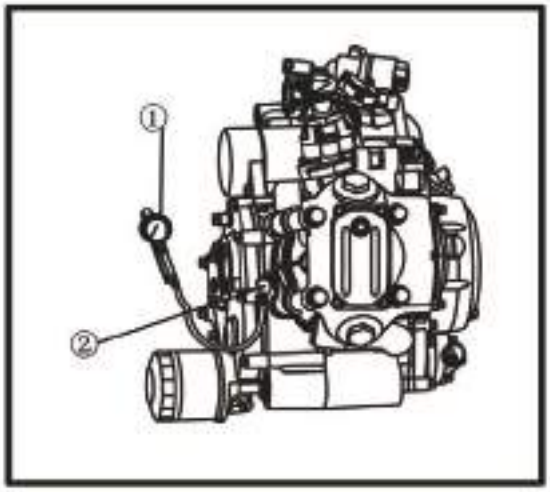

MEASURING THE COMPRESSION PRESSURE

NOTE:
Insufficient compression pressure will result in a loss of performance.

1. Start the engine and let it warm up for several minutes.
2. Stop the engine and remove the spark plug.
3. Assemble the compression pressure meter ① and joint utensil ② on the hole of the spark plug
4. check
   valve clearance

Out of specification → Adjust. Refer to "ADJUSTING THE VALVE CLEARANCE"

standard value

standard compression pressure data 1200Kpa (12kg/c)-1000r/min

5. read the highest data on the compression pressure meter

- Above the maximum pressure:
  Check the cylinder head, valve surfaces, and piston crown for carbon deposits.
- Below the minimum pressure:
  Check the accumulation carbon in the firebox of the cylinder head and accumulation carbon on the piston head.
- Refer to the table below.

Compression pressure(with oil introduced into cylinder)	
Reading	**Diagnosis**
Higher than without oil	**Worn or damaged pistons**
Same as without oil	**Defective ring(s), valves, cylinder head gasket or piston is possible.**

Compression pressure (at sea level) **Standard: 1,324Kpa (13.24 kg/cm2, 188.31Psi)** **Minimum: 1,150Kpa (11.5 kg/cm2, 163.57Psi)** **Maximum: 1,480Kpa (14.8 kg/cm2, 210.50Psi)**

- Crank over the engine with the electric starter (be

sure the battery is fully charged) with the throttle wide-open until the compression reading on the gauge stabilizes.

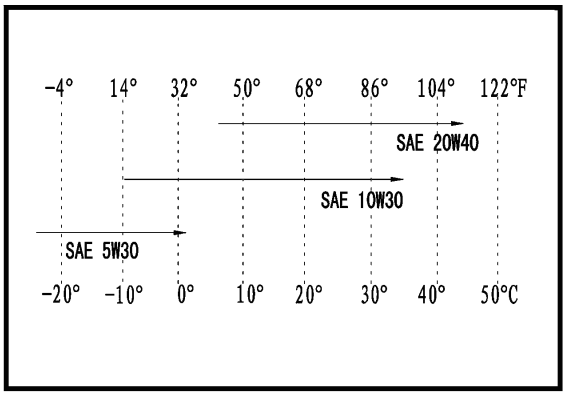

NOTE:

When cranking the engine, ground the spark plug lead to prevent sparking.

4. Install:
   - spark plug

18 Nm-20Nm (1.8 m · kg, 13 ft · lb)

CHECKING THE ENGINE OIL LEVEL

1. Place the vehicle on a level surface
2. Check:
   - engine oil level

   Oil level should be between the ②engine oil mirror maximum and minimum marks.

   Oil level low → Add oil to the proper level.

CROSSFIRE

Recommended oil
Follow the left chart.

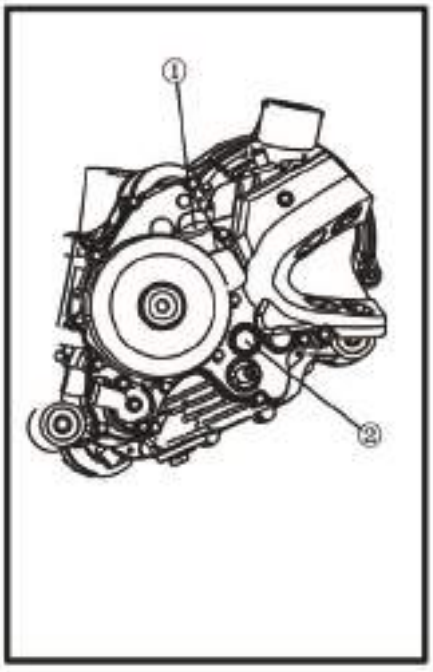

NOTE:

Recommended oil classification:
API Service "SE", "SF", "SG" type or equivalent (e.g. "SF—SE—CC", "SF—SE—SD" etc.)

NOTE:

Do not allow foreign material to enter the crankcase.

3. Stop the engine and check the oil level again

NOTE:

Wait a few minutes until the oil settles before checking the oil level.

NOTE:

Never remove the dipstick just after high speed operation because the heated oil could spurt out. Wait until the oil cools down before removing the dipstick.

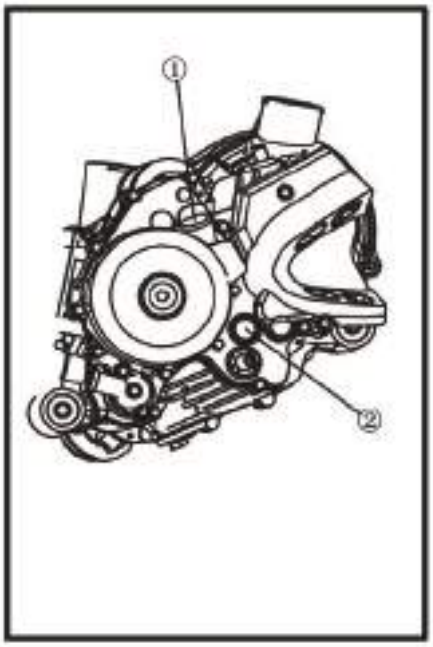

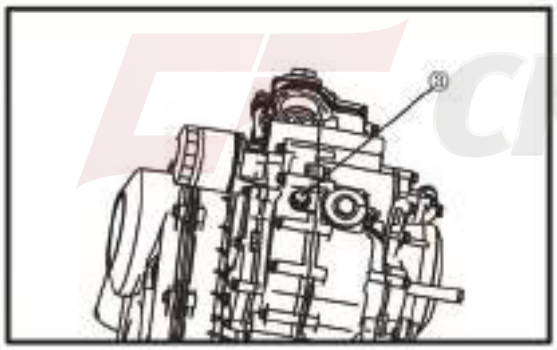

CHANGING THE ENGINE OIL

Place the vehicle on a level surface.

1. Start the engine and let it warm up for several minutes.
2. Stop the engine and place an oil pan under the engine.
3. Remove:

   dismount the following parts step by stem

   ① oil gauge

   ③ oil-draining blind nut

4. If you need to change the oil filter core, please follow the steps below exactly (Generally change the oil and core after run in-time.)

• Take out the oil gauge and oil-draining blind nut, drain the oil.

• Lubricate the O-ring of the new oil filter cartridge with a thin coat of lithium-soap-based grease.

• Tighten the new oil filter cartridge to specification with an oil filter wrench.

CROSSFIRE

Oil filter cartridge
17 Nm (1.7 m · kg)

.

5. Install:

• oil gauge ①

• oil-draining blind nut ③

6. conditions

• Change for new oil filter before impouring oil to crankcase, and make sure it is in good working condition before assembling.

• make sure that the oil reach regular level when the vehicle is placed on flat ground.

Oil level of gearbox
Periodic oil change
The oil capacity after the engine is disassembled and reassembled.
1.5L
The oil should be put into the engine for after all the oil is drawn out
1.5L

7. Install:
   - engine oil filler plug
8. Worm up the engine for a few minutes, and then stop the engine.
9. Check:
   - engine (for engine oil leaks)
   - refer to Chapter 4 check the level of engine oil
10. Check:
   - engine oil pressure

CROSSFIRE

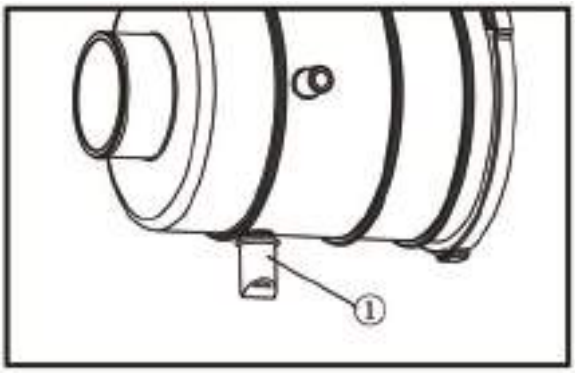

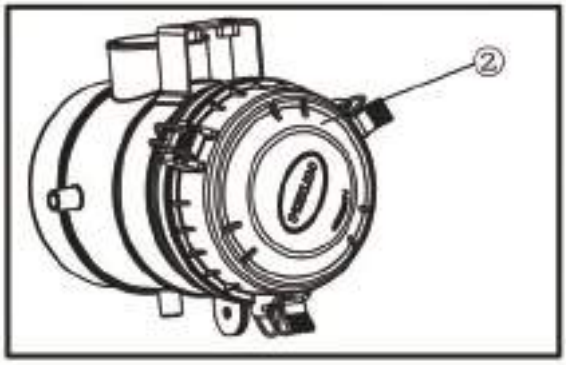

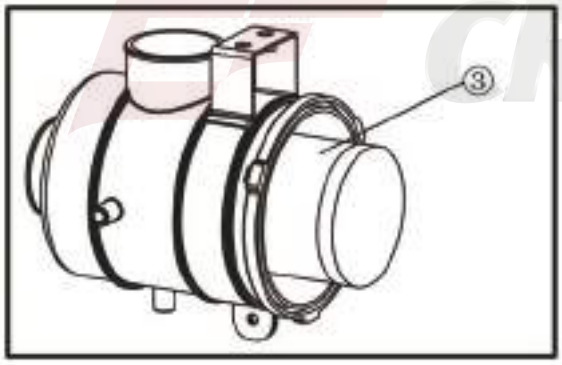

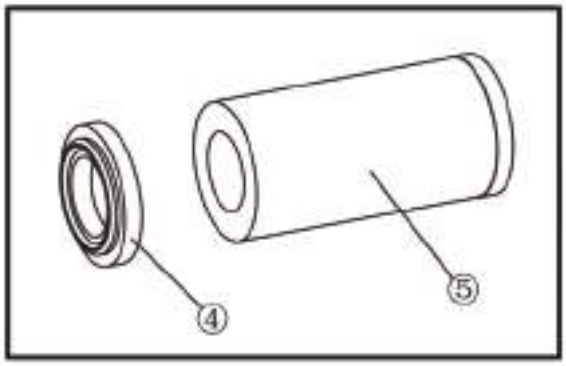

CHASSIS

CLEANING THE AIR FILTER

NOTE:

There is a check hose ① at the bottom of the air filter case. If dust and/or water collect in this hose, clean the air filter element and air filter case.

1. Remove:
   - air filter case cover ②
   - air filter element assembly③
   - air filter element cap④
   - air filter element⑤

NOTE:

Never operate the engine with the air filter element removed. This will allow unfiltered air to enter, causing rapid wear and possible engine damage. Additionally, operation without the filter element will affect carburetor tuning with subsequent poor performance and possible engine overheating.

2. Check:
   - air filter element
   - Damaged → Replace.
3. Clean:
   - air filter element

a. Wash the element gently, but thoroughly in solvent.

CROSSFIRE

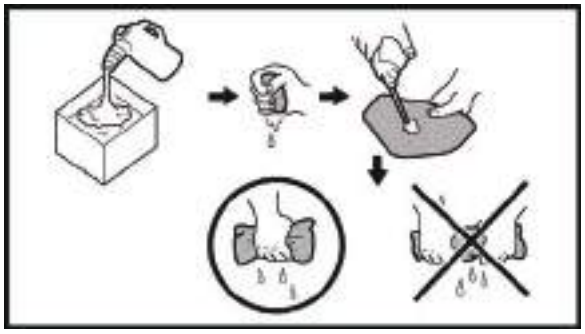

WARNING :

Use a cleaning solvent which is designed to clean parts only. Never use gasoline or low flash point solvents as they may cause a fire or explosion.

b. squeeze the excess solvent out of the element and let it dry.

NOTE:

Do not twist or wring out the element. This could damage the foam material.

c. Squeeze out the excess oil.

NOTE:

The element should be wet but not dripping.

4. Install:
   - air filter element
   - air filter case cover

NOTE:

To prevent air leaks make sure that the sealing surface of the element matches the sealing surface of the case.

CROSSFIRE

CHECKING THE COOLANT LEVEL

1. Place the vehicle on a level surface.
2. Remove front faceplate
3. Check:
   - start the engine, warm it up for several minutes, and then turn it off.
   - coolant level

NOTE:

Before checking the coolant level, wait a few minutes until the coolant has settled.

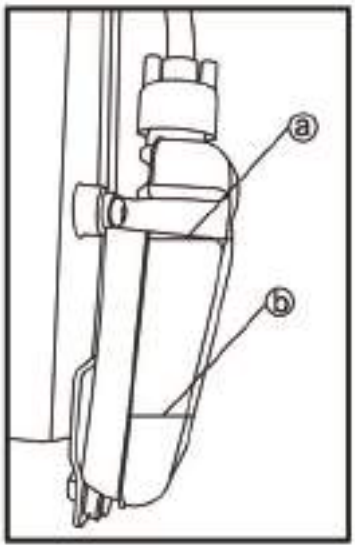

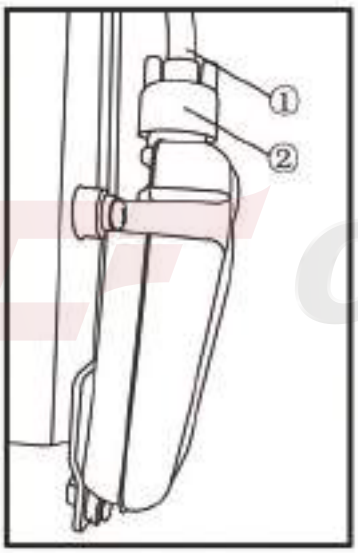

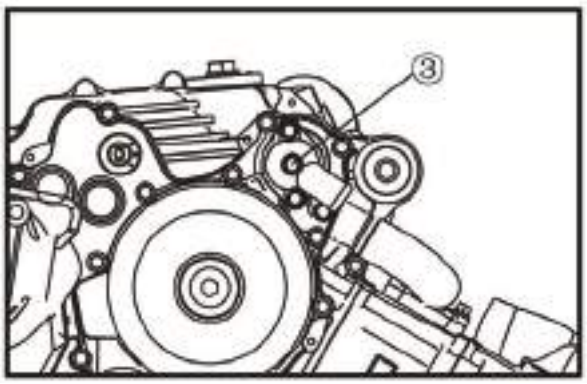

• coolant level

The coolant level should be between the minimum level mark ⓐ and maximum level mark ⓑ.Below the minimum level mark →

Add the recommended coolant to the proper level.

CHANGING THE COOLANT

1.Remove:

Front faceplate

• Disconnect coolant reservoir hose ① ;

• coolant reservoir cap ②;

• Adding water instead of coolant lowers the antifreeze content of the coolant. If water is used instead of coolant, check and if necessary, correct the antifreeze concentration of the coolant;

• Use only distilled water. However, soft water may be used if distilled water is not available.

2. Drain:

• coolant

(from the coolant reservoir)

3. Connect:

• coolant reservoir hose

4. Remove:

• coolant drain bolt (water pump) ③(along with the copper washer)

CROSSFIRE

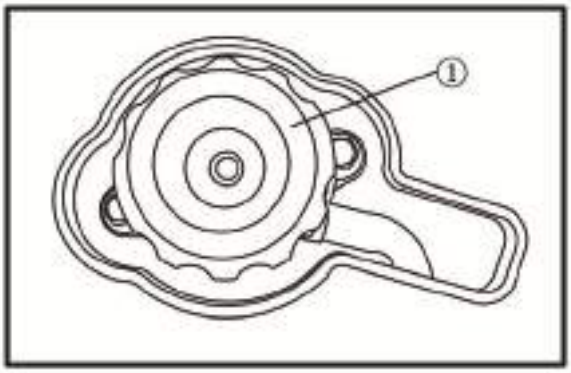

5. Remove:
   - radiator cap ①

WARNING :

A hot radiator is under pressure. Therefore, do not remove the radiator cap when the engine is hot. Scalding hot fluid and steam may be blown out, which could cause serious injury. When the engine has cooled, open the radiator cap as follows: Place a thick rag or a towel over the radiator cap and slowly turn the radiator cap counterclockwise toward the detent to allow any residual pressure to escape.
When the hissing sound has stopped, turn the radiator cap counterclockwise while pressing down on it and then remove it.

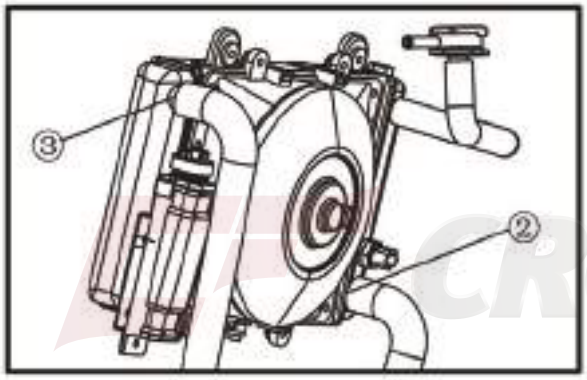

6. Drain:
   - coolant
7. Disconnect:
   - coolant outlet hose ②
   - water pump inlet hose③
8. Drain:
   - coolant

CROSSFIRE

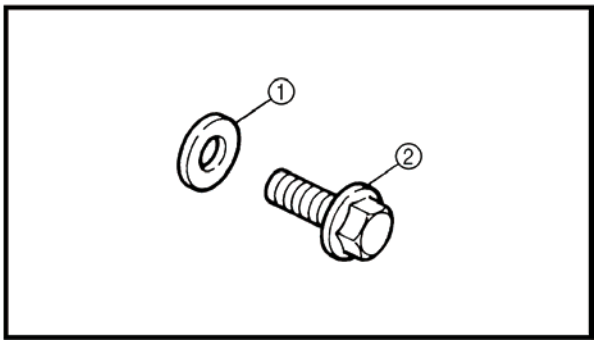

9. Check:
   - copper washer ①
   - coolant drain bolt ②
     Damage → Replace.
10. Install:
   - coolant drain bolt (water pump) T R.

10 Nm (1.0 m · kg, 7.2 ft · lb)

11. Connect:
   - water pump inlet hose
   - coolant outlet hose

.

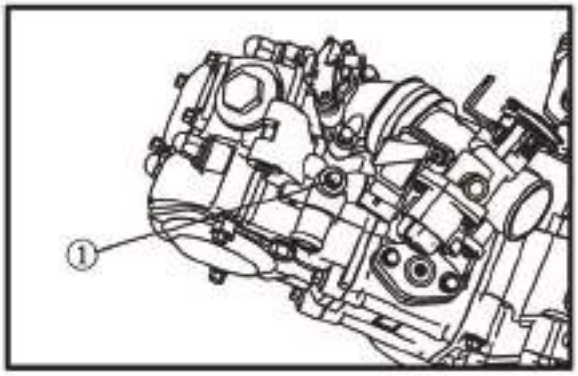

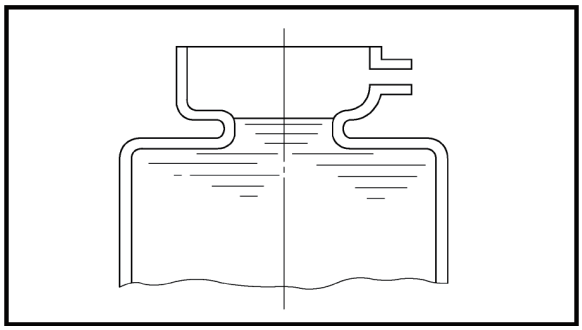

12. Remove:
  • air bleed bolt ①
13. Fill cooling
  (with the specified amount of the recommended coolant)

Recommended antifreeze
High-quality ethylene glycol antifreeze containing corrosion inhibitors for aluminum engines
Mixing ratio
1 : 1 (antifreeze : water)
Quantity total amount
1.32 L
Coolant reservoir capacity
0.627 L

NOTE:

The specified amount of coolant is a standard amount. Fill the cooling system with coolant until coolant comes out of the hole for the air bleed bolt.
Coolant is potentially harmful and should be handled with special care.

WARNING:

- ***If coolant splashes in your eyes, thoroughly wash them with water and consult a doctor;***
- ***If coolant splashes on your clothes, quickly wash it away with water and then with soap and water;***
- ***If coolant is swallowed, induce vomiting and get immediate medical attention;***
- ***If coolant comes into contact with painted surfaces, immediately wash them with water;***
- ***Do not mix different types of antifreeze.***

CROSSFIRE

.

NOTE:

Adding water instead of coolant lowers the antifreeze content of the coolant. If water is used instead of coolant, check, and if necessary, correct the antifreeze concentration of the coolant. Use only distilled water. However, soft water may be used if distilled water is not available.

14. Install:
- air bleed bolt

9 Nm (0.9 m · kg, 6.5 ft · lb)

- radiator cap;
- Fill coolant reservoir;
- Install coolant reservoir cap:
- Start the engine, warm it up for several minutes, and then turn it off.
- Check:
  coolant level

CROSSFIRE

Refer to “THE COOLANT” in chapter 4.

NOTE:

Before checking the coolant level, wait a few minutes until the coolant has settled.

- Close the hood.
- Install driver seat
  Refer to “SEATS,” in chapter 5.

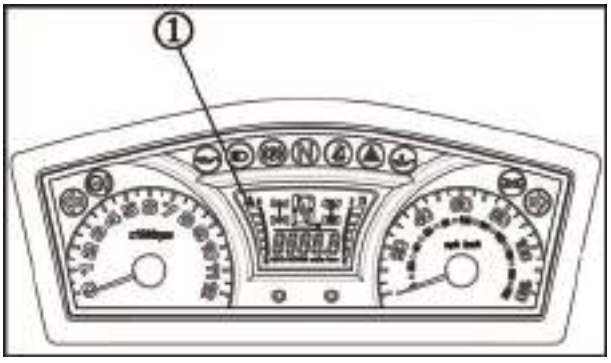

CHECKING THE COOLANT TEMPERATURE WARNING LIGHT

Coolant temperature indicator light ①

Coolant temperature warning light checking method

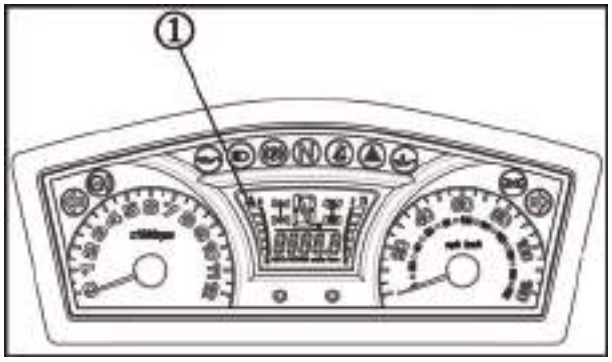

The coolant signal light contains 6 segments. The first segment means 60℃, the second means 70℃,the third means 80℃,the forth means 90℃,the fifth means 100℃ and sixth means 110℃.If the sixth segment is light ,the cooling system would be examined because the temperature of water is too high.

CROSSFIRE

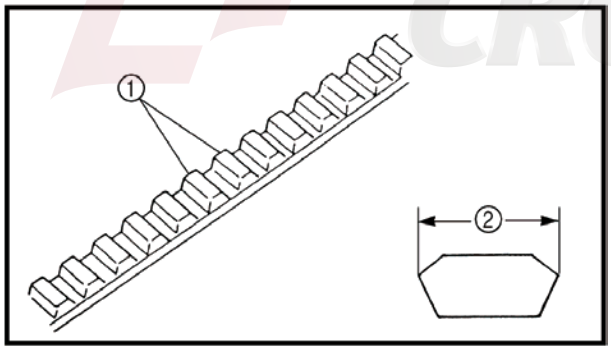

CHECKING THE V-BELT

1. Remove:
   - driver seat
   - passenger seat
   - engine cover board
   - fuel tank
   - drive belt cover
   - Check:

a. V-belt ①

Cracks/wear/scaling/chipping → Replace.

Oil/ grease → Check primary sheave and secondary sheave。

b. V-belt width ②

Out of specification → Replace.

.

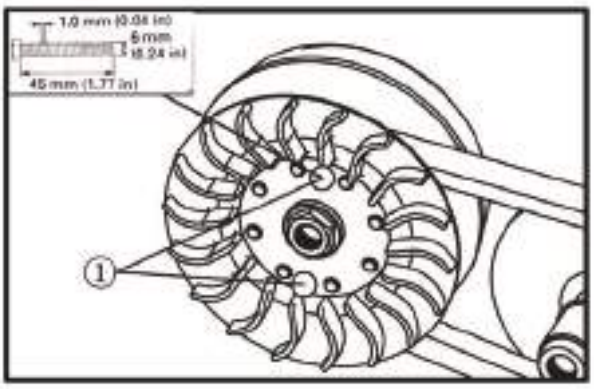

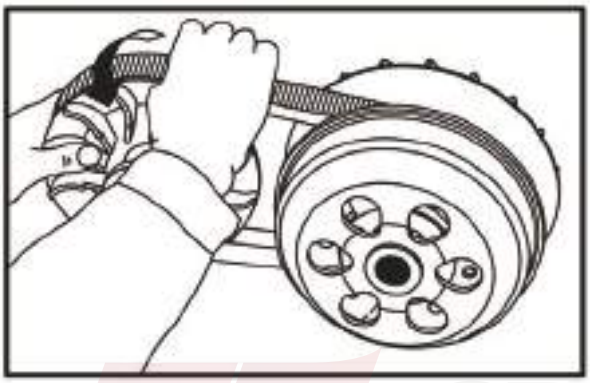

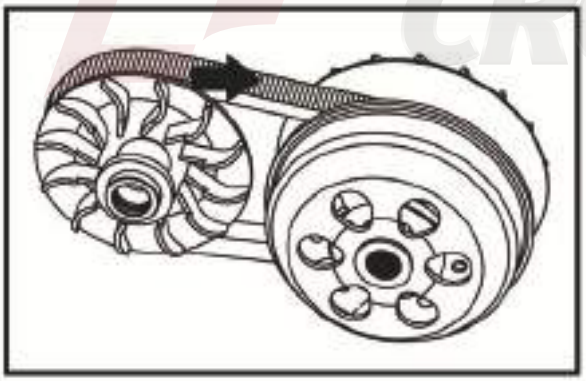

V-belt width: 23.6 mm
<Limit:> 21. mm

- Replace V-belt:
  Install the bolts ① into the secondary fixed sheave hold.

NOTE:

Tightening the bolts ①will push the secondary sliding sheave away, causing the gap between the secondary fixed and sliding sheaves to widen.

- Remove the V-belt ①from the primary sheave and secondary sheave.
- Install the V-belt.

NOTE:

Install the V-belt so that its arrow faces the direction shown in the illustration.

- Remove the bolts.

2. Install:
   - drive belt cover
   - driver seat

CLEANING THE SPARK ARRESTER

1. Clean:

Tap the tailpipe lightly with a soft-face hammer or suitable tool, then use a wire brush to remove any carbon deposits from the spark arrester portion of the tailpipe and the inner contact surfaces of the muffler

2. Spark arrester

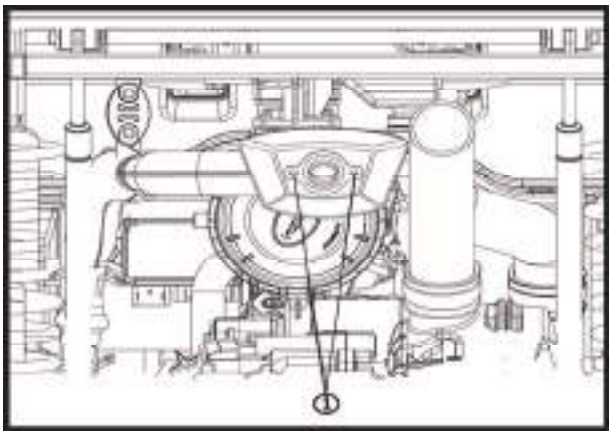

WARNING:

- ***Select a well-ventilated area free of combustible materials.***
- ***Always let the exhaust system cool before performing this operation.***
- ***Do not start the engine when removing the tailpipe from the muffler.***

3. Remove:
   - Remove the bolts①.
   - Remove the tailpipe ② by pulling it out of the muffler.
4. Install:
   - Insert the tailpipe ② into the muffler and align the bolt holes.
   - Insert the bolt 1 and tighten it.
   - Start the engine and rev it up approximately twenty times while momentarily creating exhaust system back pressure by blocking the end of the muffler with a shop towel.
   - Stop the engine and allow the exhaust pipe to cool.

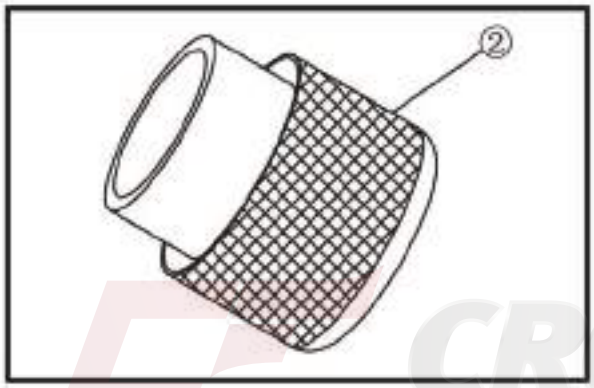

CROSSFIRE

ADJUSTING THE BRAKE PEDAL

1. Check:
   - brake pedal free play a Out of specification →adjust.

NOTE:

The end of the brake rod ① should lightly contact the brake master cylinder ②

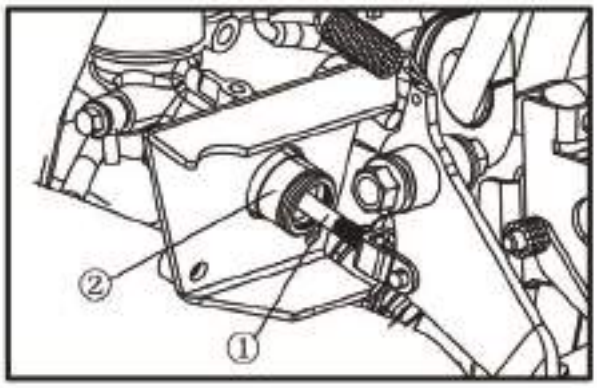

Brake pedal free play **0 mm (0.0 in)**

3. Adjust:
   - brake pedal free play

a. Loosen the locknut ③

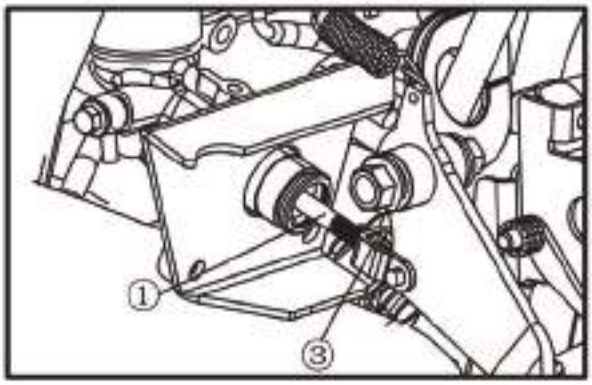

b. Turn brake rod ① in or out until the correct free play is obtained.

Turning in	**Free play is increased.**
Turning out	**Free play is decreased.**

c. Tighten the locknut to specification.

Locknut
17 Nm (1.7 m · kg, 12 ft · lb)

NOTE:

Make sure that there is no brake drag on the front or rear wheels.

CHECKING THE BRAKE FLUID LEVEL

1. Place the vehicle on a level surface.

NOTE:

When checking the brake fluid level, make sure that the top of the brake fluid reservoir top is horizontal.

CROSSFIRE

2. Lift the hood up.
3. Check:

- brake fluid level Fluid level is under "MIN" ① line → Fill up.

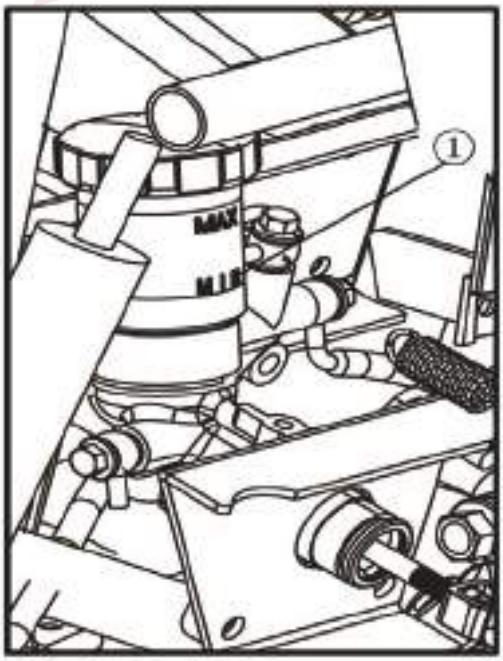

NOTE:

Brake fluid may erode painted surfaces or plastic parts. Always clean up spilled fluid immediately.

WARNING:

- ***Use only the designed quality brake fluid: otherwise, the rubber seals may deteriorate, causing leakage and poor brake performance.***
- ***Refill with the same type of brake fluid: mixing fluids may result in a harmful chemical reaction and lead to poor performance.***
- ***Be careful that water does not enter the master***

cylinder when refilling. Water will significantly lower the boiling point of the fluid and may result in a vapor lock.

4. Close the hood.

CHECKING THE FRONT BRAKE PADS

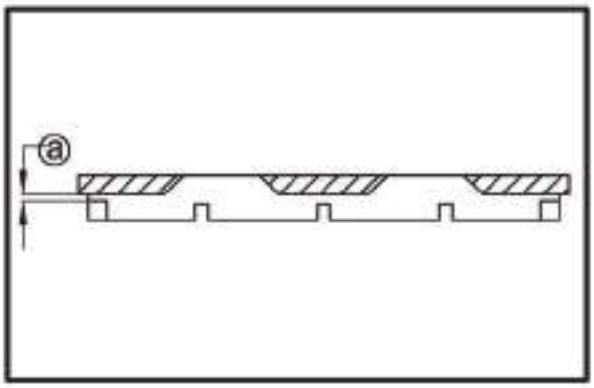

1. Remove:
   - front wheels
2. Check:
   - brake pads Wear indicator groove ⓐ almost disappeared

   Replace the brake pads as a set.

   Refer to “FRONT AND REAR BRAKES” in chapter 5.

Brake pad wear limit ⓐ
1.5 mm (0.06 in)

3. Operate the brake pedal.
4. Install:
   - front wheels

CROSSFIRE

CHECKING THE REAR BRAKE PADS

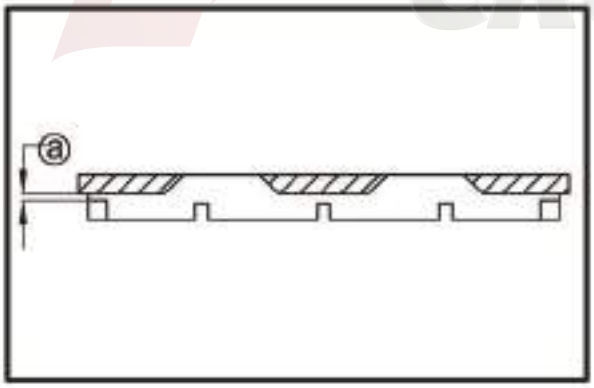

1. Check:
   - brake pads

   Wear indicator groove ⓐ almost disappeared

   Replace the brake pads as a set.

   Refer to “FRONT AND REAR BRAKES” in chapter 5.

Brake pad wear limit ⓐ
1.5 mm (0.06 in)

3. Operate the brake pedal.

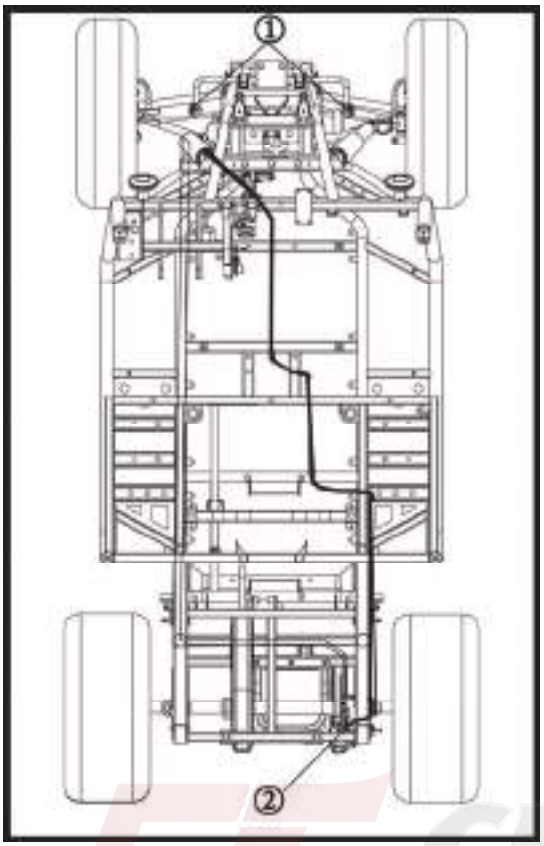

CHECKING THE BRAKE HOSES AND BRAKE PIPES

1. Remove:
   - frame toe-board
2. Check:
   - front brake hoses ①
   - rear brake hoses ②

   Cracks/wear/damage → Replace.
   Fluid leakage → Replace all damaged parts.
   Refer to "FRONT AND REAR BRAKES" in chapter 5.

NOTE:

Hold the vehicle in an upright position and apply the brake pedal.

4. Install driver seat

BLEEDING THE HYDRAULIC BRAKE SYSTEM

WARNING:

Bleed the brake system if:

- ***The system has been disassembled.***
- ***A brake hose or brake pipe have been loosened or removed.***
- ***The brake fluid has been very low.***

The brake operation has been faulty. A loss of braking performance may occur if the brake system is not properly bled.

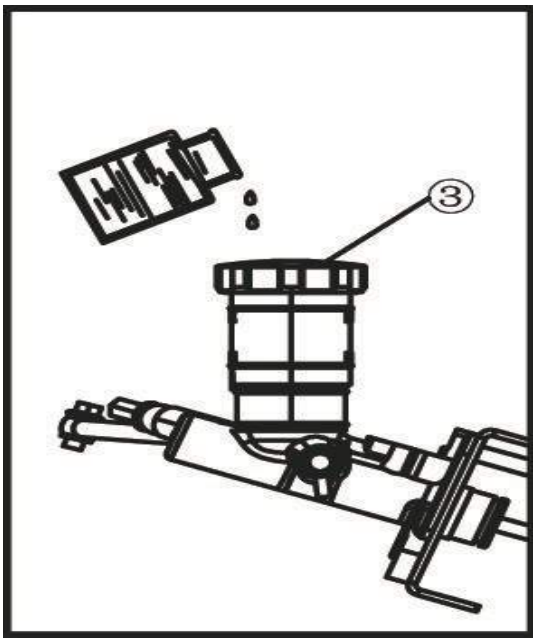

1. Bleed:
   - brake system

a. Add the proper brake fluid to the reservoir.

b. Install the diaphragm. Be careful not to spill any fluid or allow the reservoir to overflow.

c. Remove the cover of the brake oil pump ③ add the moderate brake liquid.

d. Place the other end of the hose into a container.
e. Slowly apply the brake pedal several times.
f. Push down on the pedal and hold it.
g. Loosen the bleed screw and allow the pedal to travel towards its limit.
h. Tighten the bleed screw when the pedal limit has been reached, then release the pedal.
i. Repeat steps (e) to (h) until all the air bubbles have disappeared from the fluid.
j. Tighten the bleed screw.

Front brake caliper bleed screw
6 Nm (0.6 m · kg, 4.3 ft · lb)
Rear brake caliper bleed screw
5 Nm (0.5 m · kg, 3.6 ft · lb)

NOTE:

If bleeding is difficult, it may be necessary to let the brake fluid settle for a few hours.
Repeat the bleeding procedure when the tiny bubbles in the system have disappeared.

k. Add brake fluid to the proper level.

WARNING:

Check the operation of the brake after bleeding the brake system.

CROSSFIRE

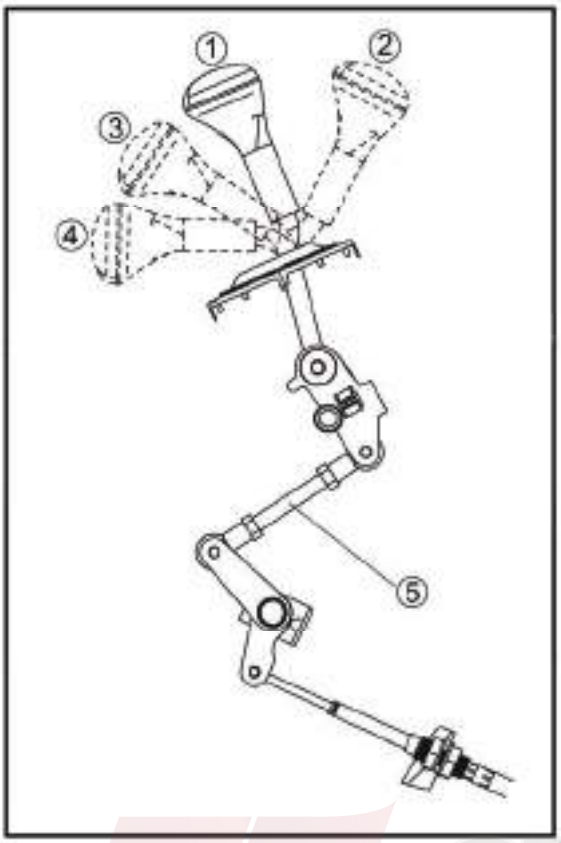

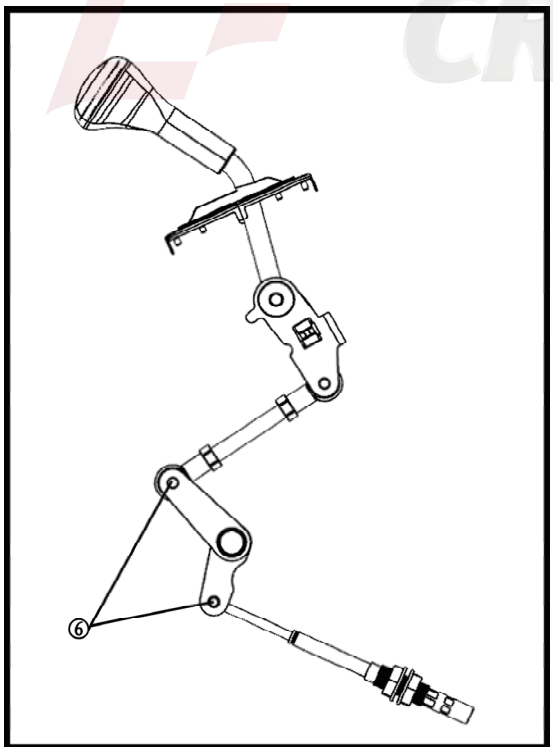

ADJUSTING THE SELECT LEVER SHIFT ROD

① Neutral
② Reverse
③ High
④ Low
⑤ Select lever shift rod

WARNING :

Before shifting, you must stop the vehicle and take your foot off the accelerator pedal. Otherwise, the transmission may be damaged.

1. Adjust:
   - Select lever shift rod

a. Make sure the select lever is in NEUTRAL.
b. Loosen both locknuts ⑥.

WARNING :

The select lever shift rod locknut (select lever side) has left-handed threads. To loosen the locknut, turn it clockwise.

c. Tighten the locknuts ⑥.

CROSSFIRE

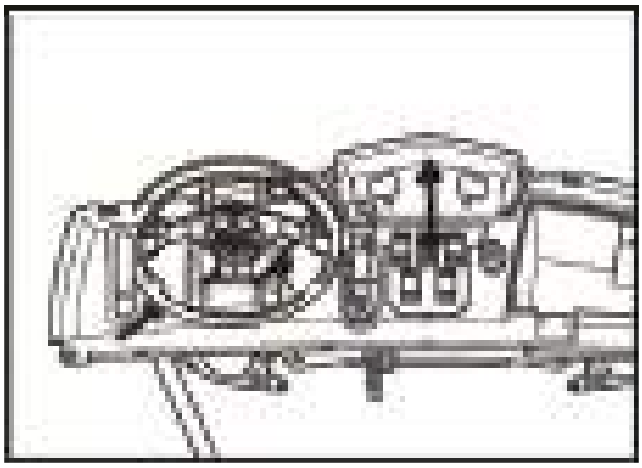

CHECKING THE STEERING SYSTEM

1. place the vehicle on the flat ground .

- Check:

Clamp seat of steering vertical column and sliding

bearing on the lower end of steering vertical column,

upper & lower and front & rear moving steering bar .If the clearance is too large, replace the sliding bearing.

Refer to section “Steering system” of chapter 5.

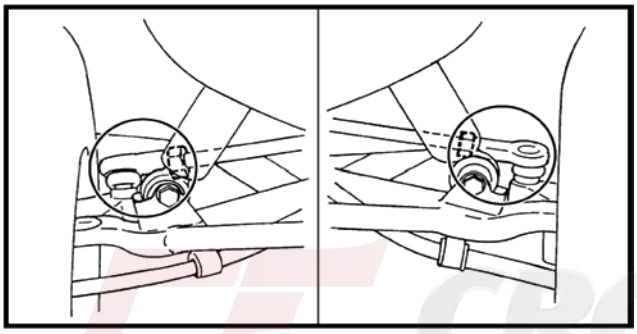

- Check:

tie-rod ends

Ball pin unit of steering tension rod.

Rotate the steering bar leftward and / or rightward,

Then roate from left to right lightly . If the ball pin unit of steering tension rod have any vertical clearance , replace it .

Refer to section “Steering system” of chapter 5.

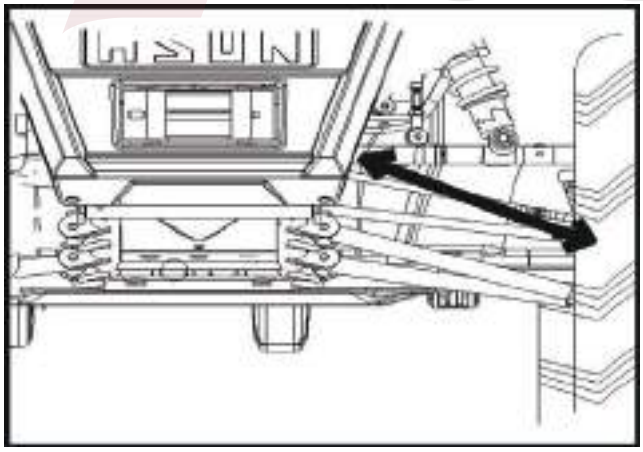

- Check:

Ball joints and/or wheel bearings Move the wheels laterally back and forth. Excessive free play → Replace the front arms (upper and lower) and/or wheel bearings.

.

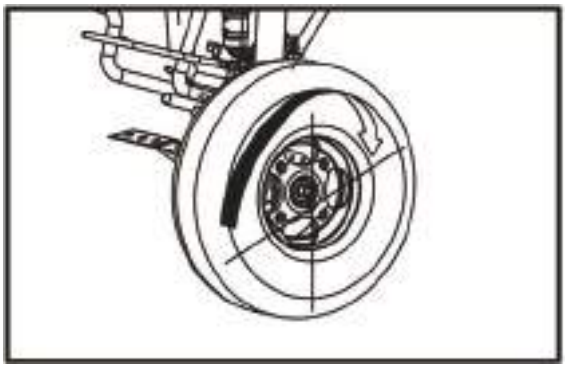

ADJUSTING THE TOE-IN

1. Place the vehicle on a level surface.
2. Measure:
   - toe-in

     Out of specification → Adjust.

Toe-in
8~ 18 mm (0.00 ~ 0.39 in)
(with tires touching the ground)

NOTE:

Before measuring the toe-in, make sure that the tire pressure is correct.

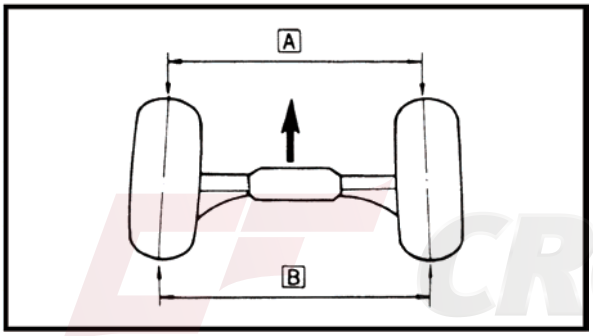

a. Mark both front tire tread centers.

b.Lift the front end of UTV to keep the front wheel from force .

c. Faster the steering forward . Meagcre the wide the between two marks.

d. Rotate the front tires 180° until the marks are exactly opposite one another.

e. Measure distance Ⓑ between the marks.

f. Calculate the toe-in using the formula given below.

Toe-in=Ⓑ-Ⓐ

g. If the toe-in is incorrect, adjust it。

3. Adjust toe-in

WARNING:

Make sure that left / right tension rods have turned the same turns . Otherwise the UTV will still go UTV left and right even though . Operate the UTV to go forward straightly with steering bar , easily causing to getting out of contor and accident . After adjusting the toe-in correctly drive the UTV to move forward a span of distance by fastering the steering bar so as to

.

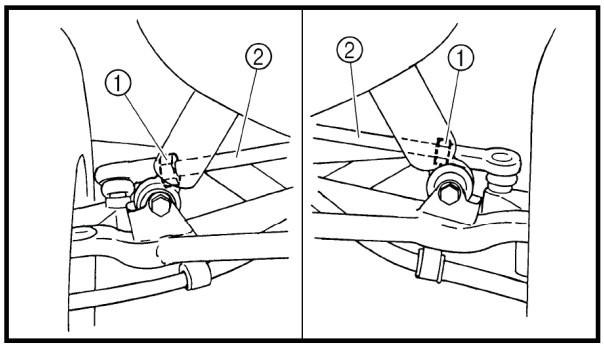

make , sure if the Steering bar is pormal , if not , adjust the tension rod left or right within the specification .

a. Mark both tie-rods ends. This reference point will be needed during adjustment.

b. Loosen the locknut (tie-rod end) ① on each tie-rod.

c. The same number of turns should be given to both the right and left tie-rods ② until the specified toe-in is obtained. This is to keep the length of the rods the same.

d. Tighten the rod end locknut on each tie-rod.

Locknut (rod end)
40 Nm (4.0 m · kg, 29 ft · lb)

ADJUSTING THE FRONT AND REAR SHOCK ABSORBERS

WARNING :

Always adjust both shock absorber spring preload to the same setting. Uneven adjustment can cause poor handling and loss of stability.

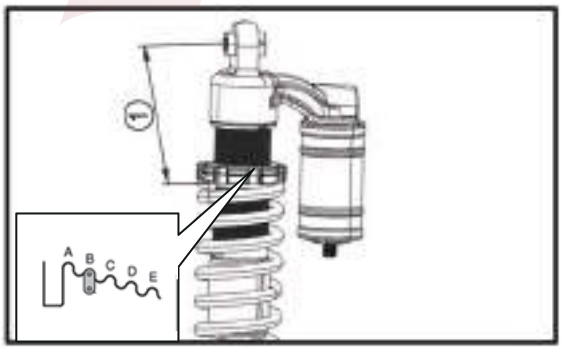

NOTE:

The spring preload of the shock absorbers can be adjusted to suit the operator's preference, weight, and the operating conditions.

1. Adjust:
   - spring preload Turn the adjuster ① to increase or decrease the spring preload.

Standard position: B
Minimum (Soft) position: A
Maximum (Hard) position: E

CHECKING THE TIRES

WARNING :

• TIRE CHARACTERISTICS

Tyre characteristics influence the handling of vehicle's. If other tire combinations are used, they can adversely affect your vehicle's handling characteristics and are therefore not recommended.

	Size
Front	22×7-10
Rear	22×10-10

• TIRE PRESSURE

a. Recommended tire cold pressure

Front 49Kpa (0.49kgf/cm^2, 7psi)

Rear 49KPa (0.49 kgf/cm^2,7psi)

when seating the tire beads. Higher pressure may cause the tire to burst.

Inflate the tires slowly and carefully.

Fast inflation could cause the tire to burst.

• MAXIMUM LOADING LIMIT

a. Vehicle loading limit (total weight of cargo, operator, passenger and accessories):226kg

b. Cargo bed: 50kg

c. Trailer hitch:

Pulling load (total weight of trailer and cargo): N/A

Be extra careful of the vehicle balance and stability when towing a trailer.

CROSSFIRE

.

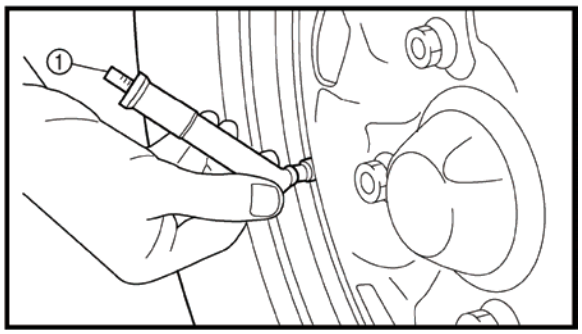

1. Measure:
   - Tire pressure (cold tire pressure) out of → specification Adjust.

NOTE:

- **The tire pressure gauge ① is included as standard equipment.**
- **If dust or the like is stuck to this gauge, it will not provide the correct readings. Therefore, take two measurements of the tire's pressure and use the second reading.**

WARNING:

Uneven or improper tire pressure may adversely affect the handling of this vehicle and may cause loss of control.

- ***Maintain proper tire pressures.***
- ***Set tire pressures when the tires are cold.***
- ***Tire pressures must be equal in both*** **front** ***tires and equal in both rear tires.***

CROSSFIRE

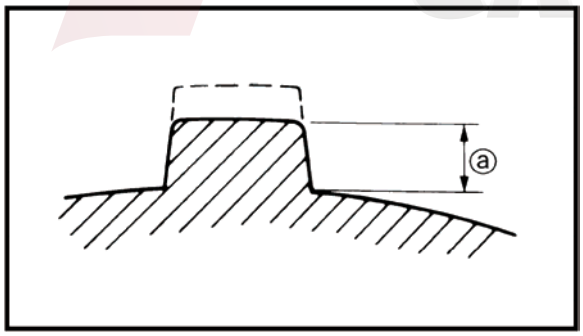

2. Check:
   - tire surfaces

Wear/damage ⓐ → Replace.

Tire wear limit ⓐ
Front and rear: 3.0 mm (0.12 in)

WARNING:

It is dangerous to ride with a worn-out tire.
When tire wear is out of specification, replace the tire immediately.

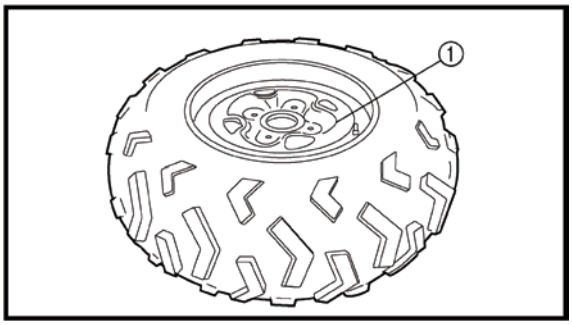

CHECKING THE WHEELS

1. Check:
   - Wheels ① Damage/bends → Replace.

NOTE:

Always balance the wheel when a tire or wheel has been changed or replaced.

WARNING:

- ***Never attempt even small repairs to the wheel.***
- ***Ride conservatively after installing a tire to allow it to seat itself properly on the rim.***

CHECKING AND LUBRICATING THE CABLES

WARNING:

A damaged cable sheath may cause corrosion and interfere with the cable movement. An unsafe condition may result so replace a damaged cable as soon as possible.

1. Check:
   - cable sheath Damage → Replace.
   - cable operation Unsmooth operation → Lubricate or replace.

NOTE:

Hold the cable end up and apply several drops of lubricant to the cable.

2. Apply:
   - lithium-soap-based grease (onto end of the cable)

CROSSFIRE

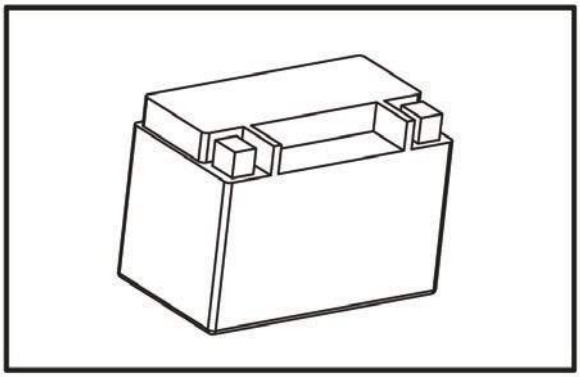

ELECTRICAL

CHECKING AND CHARGING THE BATTERY

WARNING :

Batteries generate explosive hydrogen gas and contain electrolyte which is made of poisonous and highly caustic sulfuric acid.

Therefore, always follow these preventive measures:

- ***Wear protective eye gear when handling or working near batteries;***
- ***Charge batteries in a well-ventilate2d area;***
- ***Keep batteries away from fire, sparks or open flames (e.g., welding equipment, lighted cigarettes);***
- ***Do not smoke when charging or handling batteries;***
- ***keep batteries and electrolyte out of reach of children;***
- ***Avoid bodily contact with electrolyte as it can cause severe burns or permanent eye injury;***

first aid in case of bodily contact:

External

- ***Skin — Wash with water;***
- ***Eyes — Flush with water for 15 minutes and get immediate medical attention;***

Internal

Drink large quantities of water or milk followed with milk of magnesia, beaten egg or vegetable oil. Get immediate medical attention.

WARNING :

- ***This is a sealed battery. Never remove the sealing caps because the balance between cells will not be maintained and battery performance will deteriorate;***
- ***Charging time, charging amperage and charging voltage for an MF battery are***

.

different from those of conventional batteries. The MF battery should be charged as explained in the charging method illustrations. If the battery is overcharged, the electrolyte level will drop considerably;

• Therefore, take special care when charging the battery.

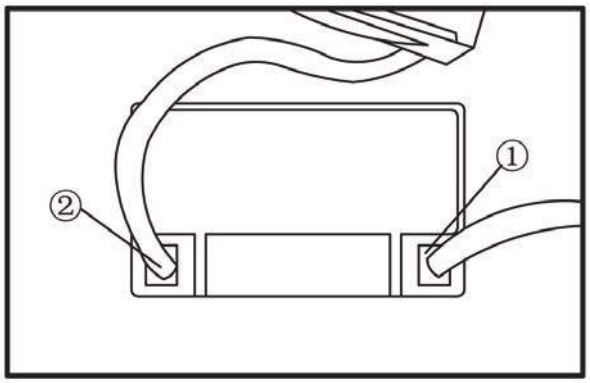

NOTE:

Since MF batteries are sealed, it is not possible to check the charge state of the battery by measuring the specific gravity of the electrolyte. Therefore, the charge of the battery has to be checked by measuring the voltage at the battery terminals.

1. Remove:
• Lift the hood up;
• battery case cover;
• disconnect;
battery leads

CROSSFIRE

NOTE:

First, disconnect the negative battery lead ①, and then the positive battery lead ②.

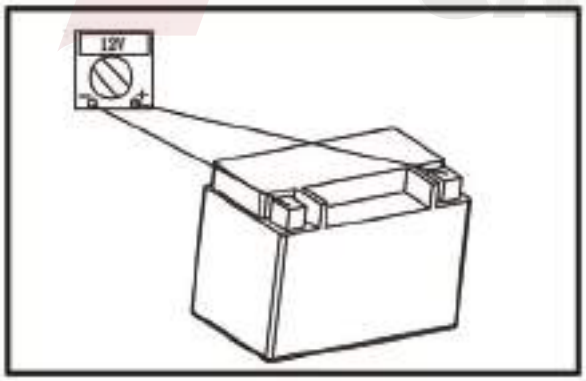

• Remove;
battery
• Check;
battery charge

a. Connect a pocket tester to the battery terminals.

Positive tester probe → positive battery terminal
Negative tester probe → negative battery terminal

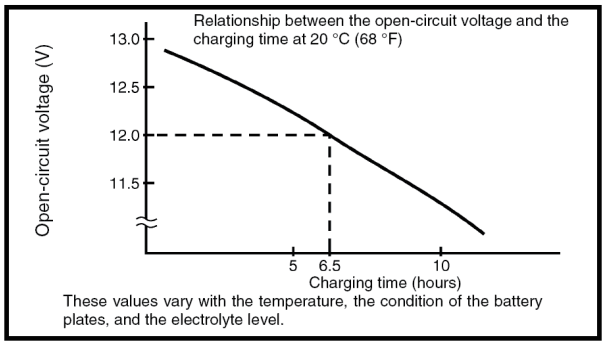

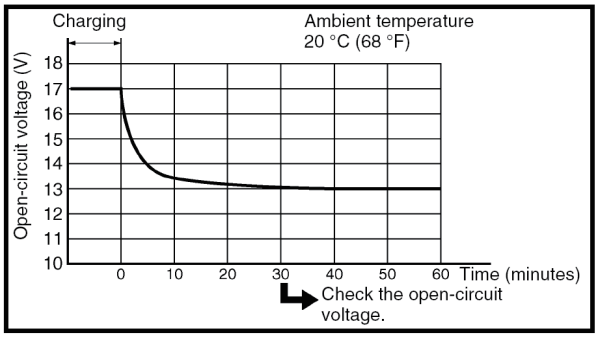

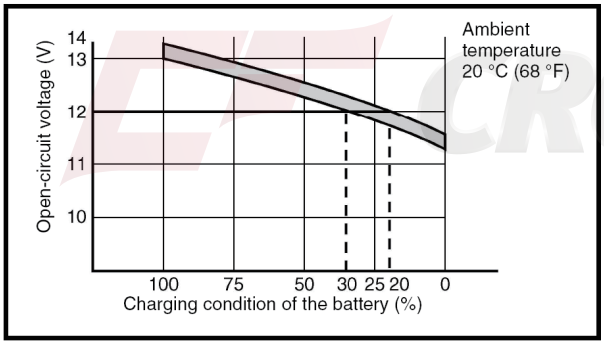

NOTE:

- **The charge state of an MF battery can be checked by measuring its open-circuit voltage (i.e., the voltage when the positive terminal is disconnected).**
- **No charging is necessary when the open-circuit voltage equals or exceeds 12.8 V.**

b. Check the charge of the battery, as shown in the charts and the following example.

Example

c. Open-circuit voltage = 12.0 V

d. Charging time = 6.5 hours

e. Charge of the battery = 20 ~ 30%

2. Charge:

- Battery (refer to the appropriate charging method illustration) .

WARNING:

Do not quick charge a battery.

NOTE:

- **Never remove the MF battery sealing caps.**
- **Do not use a high-rate battery charger since it forces a high-amperage current into the battery quickly and can cause battery overheating and battery plate damage.**
- **If it is impossible to regulate the charging current on the battery charger, be careful not to overcharge the battery.**
- **When charging a battery, be sure to remove it from the vehicle. (If charging has to be done with the battery mounted on the vehicle, disconnect the negative battery lead from the battery terminal).**
- **To reduce the chance of sparks, do not plug in the battery charger until the battery charger leads are connected to the battery.**
- **Before removing the battery charger lead clips from the battery terminals, be sure to turn off the battery charger.**
- **Make sure the battery charger lead clips are in full contact with the battery terminal and that**

they are not shorted. A corroded battery charger lead clip may generate heat in the contact area and a weak clip spring may cause sparks.

- **If the battery becomes hot to the touch at any time during the charging process, disconnect the battery charger and let the battery cool before reconnecting it. Hot batteries can explode!**
- **As shown in the following illustration, the open-circuit voltage of an MF battery stabilizes about 30 minutes after charging has been completed. Therefore, wait 30 minutes after charging is completed before measuring the open-circuit voltage.**

Charging method using a variable-current (voltage) charger

NOTE:

- **Leave the battery unused for more than 30 minutes before measuring its open-circuit voltage.**
- **Set the charging voltage to 14.0 ~14.2 V. (If the charging voltage is lower, charging will be insufficient, if it is higher, the battery will be over-charged.)**

CROSSFIRE

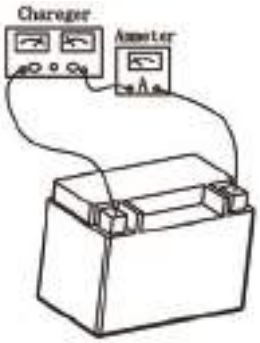

Measure the open-circuit voltage prior to charging.

↓

Connect a charger and ammeter to the battery and start charging.

↓

Is the amperage higher than the standard charging amperage written on the battery?

YES → Adjust the voltage to obtain the standard charging amperage

NO → Adjust the charging voltage to 14.0 ~ 14.2 V

↓

Monitor the amperage for 3 ~ 5 minutes. Is the standard charging amperage exceeded?

YES → Adjust the voltage to obtain the standard charging amperage

NO → If the amperage does not exceed the standard charging amperage after 5 minutes, replace the battery.

↓

Set the timer to the charging time determined by the open circuit voltage.

↓

If the required charging time exceeds 5 hours, it is advisable to check the charging amperage after 5 hours. If there is any change in the amperage, readjust the voltage to obtain the standard charging amperage.

↓

Leave the battery unused for more than 30 minutes before measuring its open-circuit voltage.
12.8 V → Charging is complete.
12.0 ~ 12.7 V → Recharging is required.
Under 12.0 V → Replace the battery.

CROSSFIRE

Charging method using a constant voltage charger

NOTE:

Leave the battery unused for more than 30 minutes before measuring its open-circuit voltage.

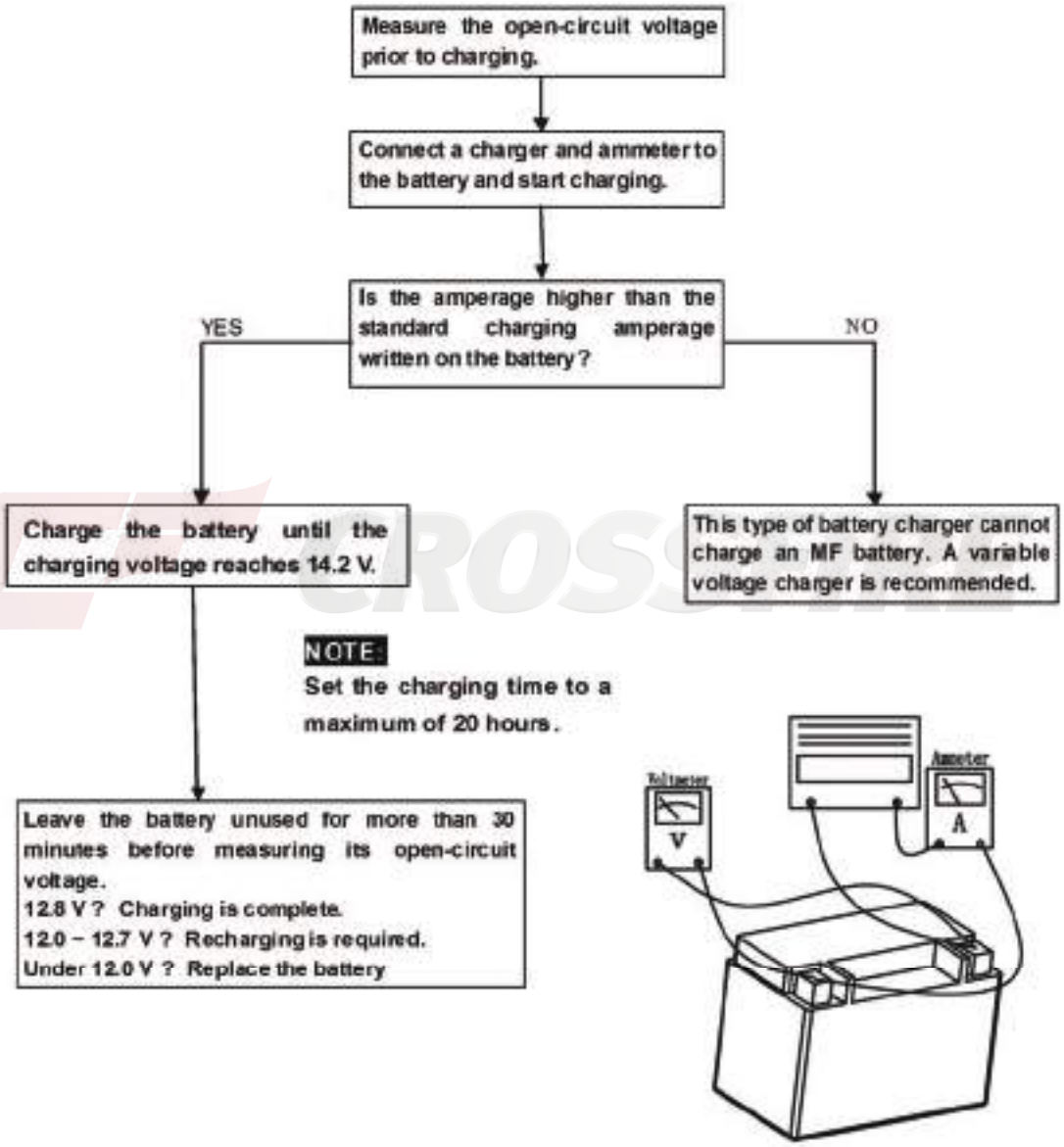

.

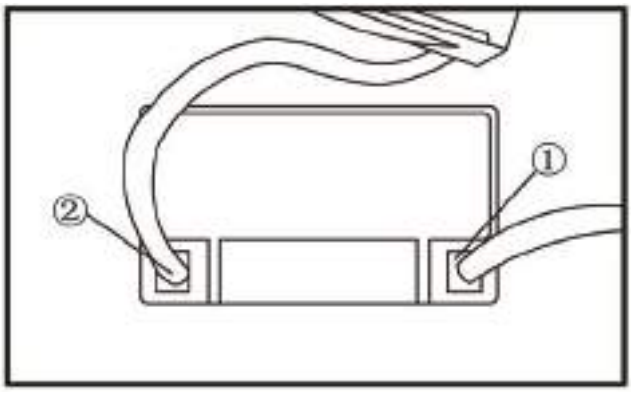

NOTE:

Constant amperage chargers are not suitable for charging MF batteries.

3. Install:
- battery
- Connect:
  battery leads

NOTE:

First, connect the positive battery lead ①, and then the negative battery lead ②.

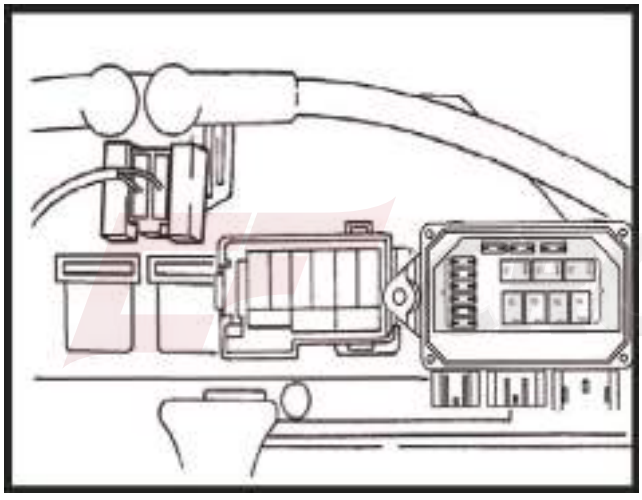

- Check:
  battery terminals Dirt → Clean with a wire brush.
  Loose connection → Connect properly.
- Lubricate:
  battery terminals
- Install:
  battery case cover
- Close the hood.

BOSSFIRE

CHECKING THE FUSES

NOTE:

Always turn off the main switch when checking or replacing a fuse. Otherwise, a short circuit may occur.

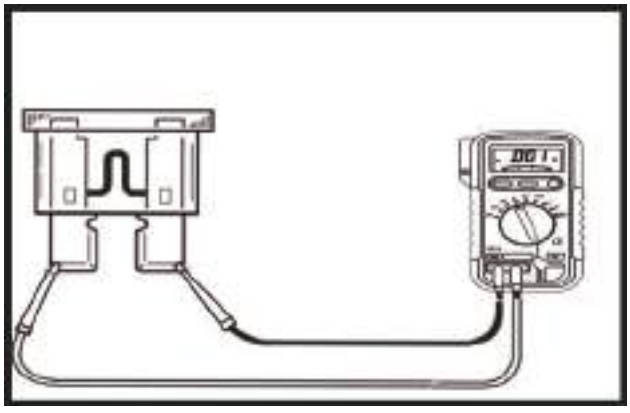

1. Remove:
- lift the hood up.
- battery case cover

2. Check:
- fuses

a. Connect the pocket tester to the fuse and check it for continuity

NOTE:

Set the tester to the "Ω × 1" position.

- blown fuse

b. If the tester indicates“∞”, replace the fuse.

3. Replace:

a. Turn off the ignition.

b. Install a new fuse of the proper amperage.

c. Turn on switches to verify operation of the related electrical devices.

d. If the fuse immediately blows again, check the electrical circuit.

Description	Current rating	Quantity
Instrument, ECU often electric fuse	5 A	1
Relay coil power fuse	10 A	1
Brake lights,emergency lights power fuse	10 A	1
ECU,instrument fuse switch power supply	15A	1
DC power supply socket fuse	15A	1
Headlamps power fuse	15 A	1
Reserve	5 A	1
Reserve	10A	1
Reserve	15A	1

CROSSFIRE

WARNING :

Ever use a fuse with a rating other than that specified. Never use other materials in place of a fuse. An improper fuse may cause extensive damage to the electrical system, a malfunction of the lighting and ignition systems and could possibly cause a fire.

4. Install:

• battery case cover

5. Close the hood.

.

CHANGING THE HEADLIGHT BULB Ⅰ

Remove:

- Lift the hood up.
- headlight bulb holder cover ①

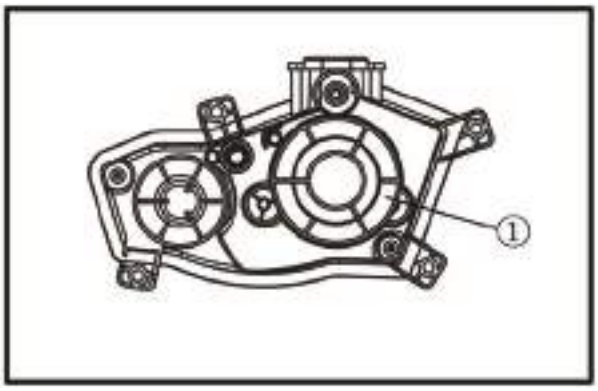

- headlight bulb holder (with bulb) ①
- bulb

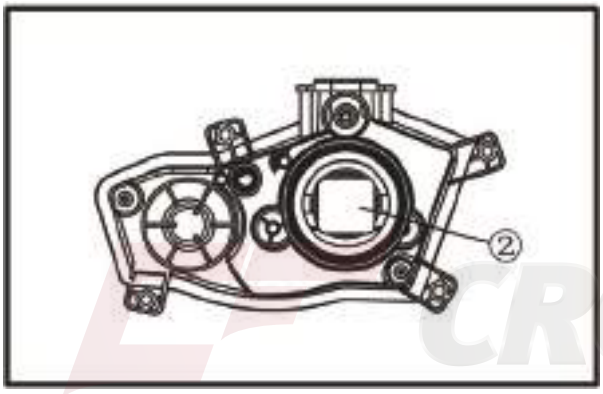

NOTE:

Turn left the defective bulb by unhooking the headlight bulb holder tabs ②

WARNING:

Keep flammable products and your hands away from the bulb while it is on, since it will be hot. Do not touch the bulb until it cools down.

CROSSFIRE

1. Install:

• bulb new

Secure the new bulb with the headlight bulb holder.

NOTE:

Avoid touching the glass part of the bulb. Keep it free from oil; otherwise, the transparency of the glass, life of the bulb, and luminous flux will be adversely affected. If oil gets on the bulb, thoroughly clean it with a cloth moistened with alcohol or lacquer thinner.

• headlight bulb holder (with bulb)
• headlight bulb holder cover
• Close the hood.

CROSSFIRE

CHANGING THE HEADLIGHT BULB Ⅱ

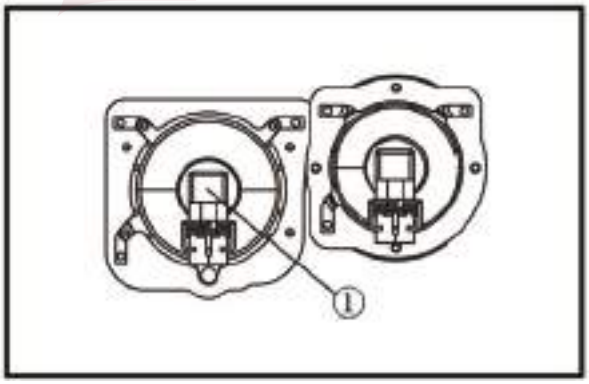

Remove:
• Lift the hood up.
• headlight bulb holder cover ①

• headlight bulb holder (with bulb) ①
• bulb

NOTE:

Turn on the defective bulb by unhooking the headlight bulb holder tabs

WARNING:

Keep flammable products and your hands away from the bulb while it is on, since it will be hot. Do not touch the bulb until it cools down.

1. Install:

• bulb new

Secure the new bulb with the headlight bulb holder.

NOTE:

Avoid touching the glass part of the bulb. Keep it free from oil; otherwise, the transparency of the glass, life of the bulb, and luminous flux will be adversely affected. If oil gets on the bulb, thoroughly clean it with a cloth moistened with alcohol or lacquer thinner.

• headlight bulb holder (with bulb)
• headlight bulb holder cover
• Close the hood.

CROSSFIRE

CHANGING THE TAIL/BRAKE LIGHT BULB

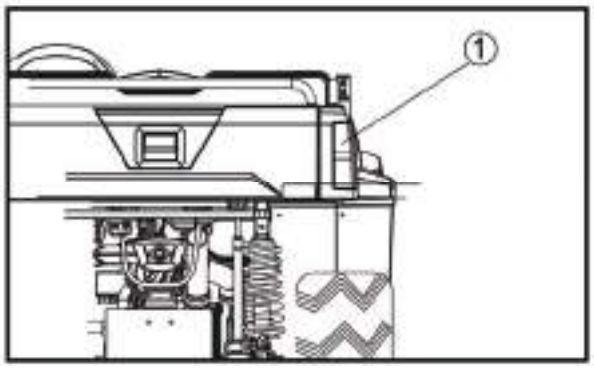

1. Remove:
• Tail/brake light bulb holder(with bulb)①
• Secure the new bulb with the tail/brake light bulb holder.
• tail/brake light bulb holder (with bulb) ①
• bulb

NOTE:

Turn the bulb holder counterclockwise and remove the defective bulb.

WARNING:

Keep flammable products and your hands away from the bulb while it is on, since it will be hot. Do not touch the bulb until it cools down.

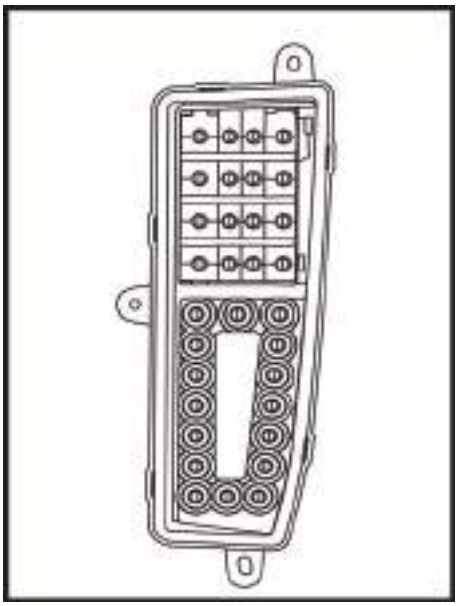

2. Install:

• bulb new

Secure the new bulb with the tail/brake light bulb holder.

NOTE:

Avoid touching the glass part of the bulb. Keep it free from oil; otherwise, the transparency of the glass, life of the bulb, and luminous flux will be adversely affected. If oil gets on the bulb, thoroughly clean it with a cloth moistened with alcohol or lacquer thinner.

• tail/brake light bulb holder (with bulb)

CROSSFIRE

ENGINE

ENGINE NOTE

Make sure the components, oil, adhesive, sealant are from the company or recommended.

2. Original removal oil seal，gasket, O-ring, piston ring can not be re-assemblied again, make sure all these parts are new.
1. Pay attention to keep dismantled parts orderly, make sure their original positions for reassembling.
4. Prevent dismantled parts damaged, clean before measure and assembly, remove the oil with compressed air. Paint the rotating and sliding parts with specified oil, paint or inject designated location with recommended grease.
5. Bolts and nuts tightening order: pre-fixed bolts, and then tighten them from the large diameter to small diameter, from inside to outside by diagonal points 2 or 3 times to the specified torque. Opposite order is for removing bolts and nuts.
6. Make sure sealing bolt (with the sealant) must be replaced
7. Make sure to use new bearing when remove assembly set up by pressure.
8. Determined axial and radial clearance of inner and outer bearing ring by touch, new bear should be replaced if the clearance is too large or non-rotating flexible.
9. Bearing assembly directions: bearing logo should be visible assemblies; confirm bearing outer ring rotate and move reliably and flexibly when assemble bearing by pressure.
10. Oil seal assembly: pay attention to seal side is in the side of oil, logo side outwards, seal side be painted with grease, and make sure seal side without scratch and oil seal be vertical.
11. Before assembly, sealing material attached to all engine covers and crank case combination surface should be cleaned.
12. Before assembly engine, be familiar with engine lubrication circuit, clean and blow oil circuit.

CROSSFIRE

ENGINE REMOVAL

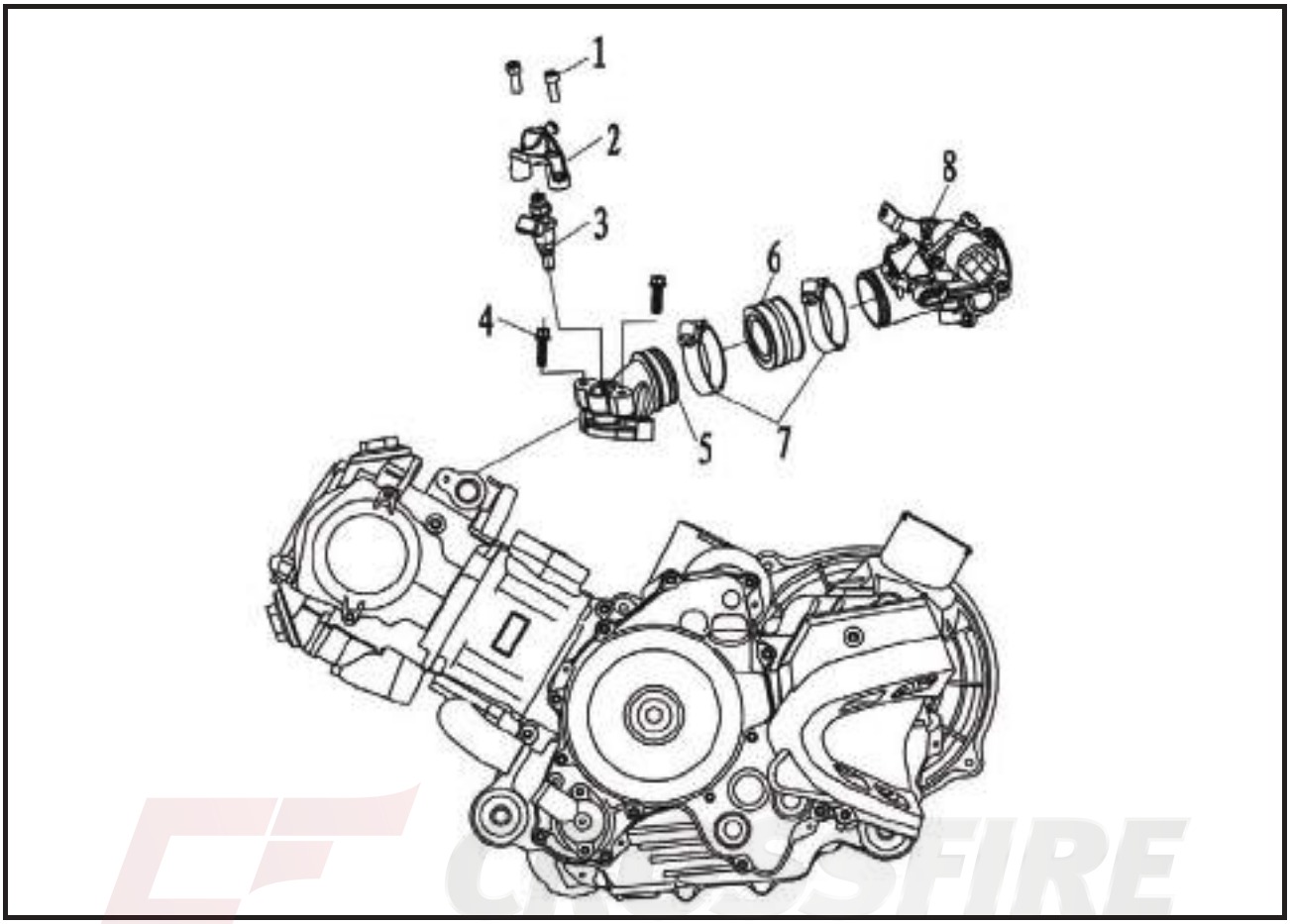

No.	Part Name	Qty	Remarks
	Removing throttle and intake manifold.		Remove the parts in the order listed.
1	Cylinder screw M6×20 Inner	2	
2	Fuel injector fixed seat	1	
3	Injector	1	
4	Cylinder screw M6×25 Inner	2	
5	Intake-tube	1	
6	Joint inlet pipe	1	
7	Inlet pipe hoop	2	
8	Throttle（D34）	1	
			For installation, reverse the removal procedure.

CYLINDER HEAD AND CYLINDER HEAD COVER

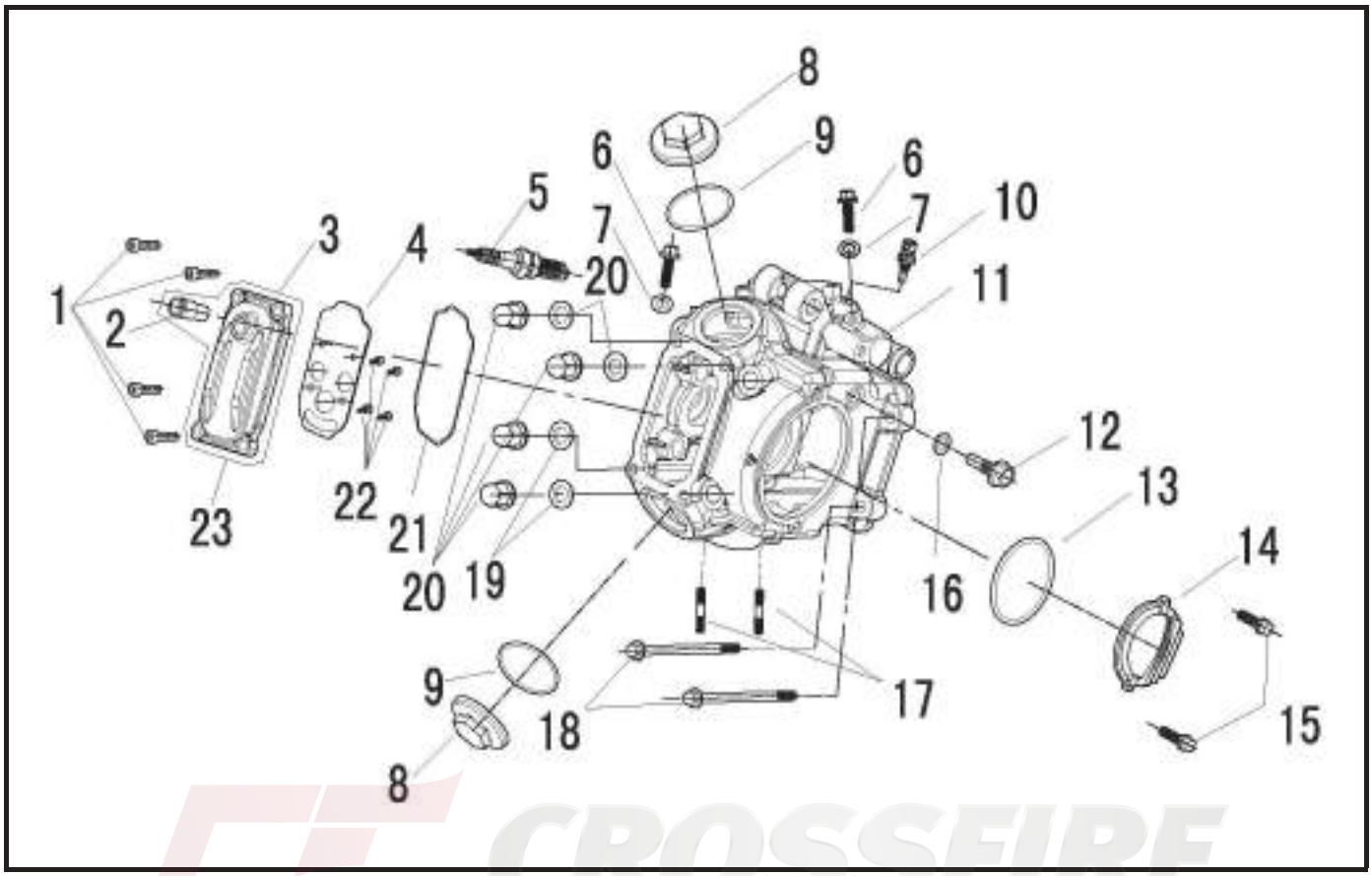

No.	Part Name	Qty	Remarks
	Removing the cylinder head and cylinder head		Remove the parts in the order listed.
1	Hexagon socket screw M6×20	4	
2	Exhaust nozzle	1	
3	Cylinder head cover	1	
4	Oil vapor separation plate	1	
5	Spark plug	1	
6	Flange bolt M6×14	2	
7	Aluminum gasket 6×12×1.5	2	
8	Valve cover	2	
9	O-RING Φ36×3.5	2	
10	Water temperature sensor	1	
11	Cylinder head comp	1	
12	Tension plate shaft bolt M8×32	1	
13	O-Ring Φ75×2.5	1	

CROSSFIRE

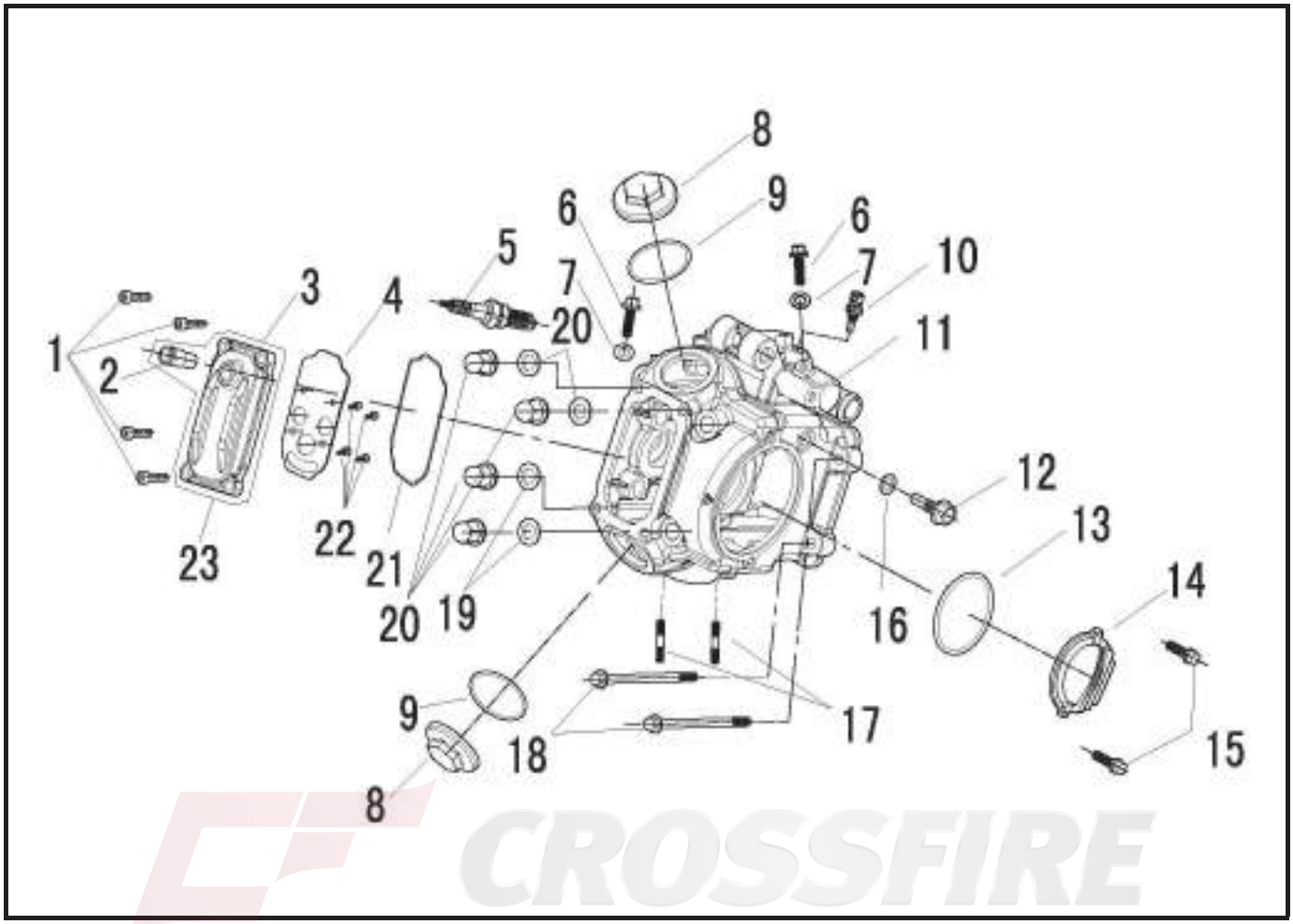

No.	Part Name	Qty	Remarks
14	Left cylinder head cover	1	
15	Flange bolt M6×20	2	
16	Washer Φ8×Φ15×2	1	
17	Stud bolt M8×45	2	
18	Flange bolt M6×110	2	
19	Copper washer Φ10.5×Φ18×2	4	
20	Cap nut M10	4	
21	O-Ring Φ78×3	1	
22	Hexagon socket screw M4×12	4	
23	Cylinder head cover assembly	1	
			For installation, reverse the removal procedure.

1、CHECK

1). Checking the valve clearance

• Valve clearance

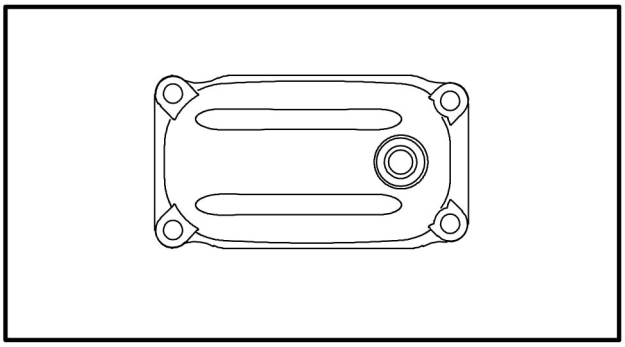

2). Checking the cylinder head cover

• cylinder head cover

Cracks/damage → Replace the cylinder head cover and cylinder head as a set.

3). Checking the tappet covers

• Cylinder head cover ①

Cracks/damage → Replace.

• Cylinder cover pad ②

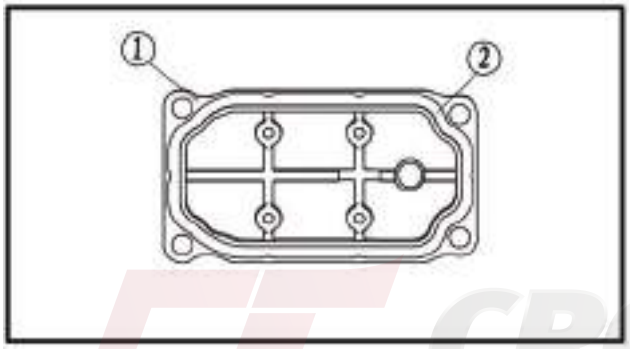

NOTE:

When installing, new replacement washer and apply wheel bearing grease LS.

4). Removing the screwdriver and slowly release the timing chain tensioner rod.

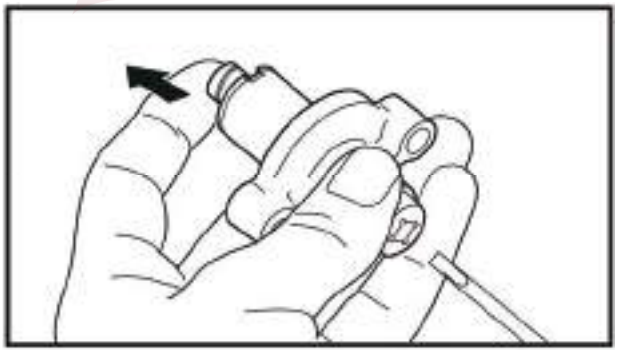

NOTE:

Make sure that the timing chain tensioner rod comes out of the timing chain tensioner housing smoothly. If there is rough movement, replace the timing chain tensioner.

5). Checking the cylinder head (1). Eliminate:

• carbon deposits (from the combustion chamber)

Use a rounded scraper.

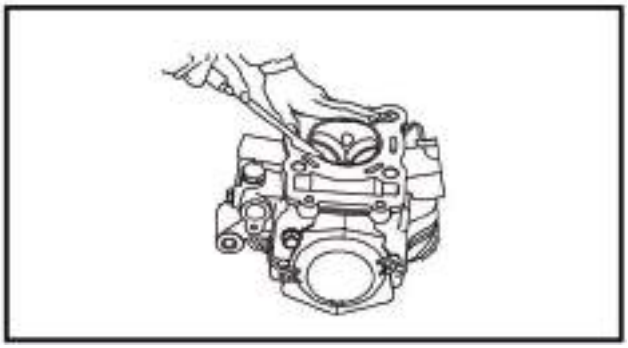

NOTE:

Do not use a sharp instrument to avoid damaging or scratching:

- **spark plug threads**
- **valve seats**

(2). Check:

• cylinder head

Scratches/damage → Replace the cylinder

CROSSFIRE

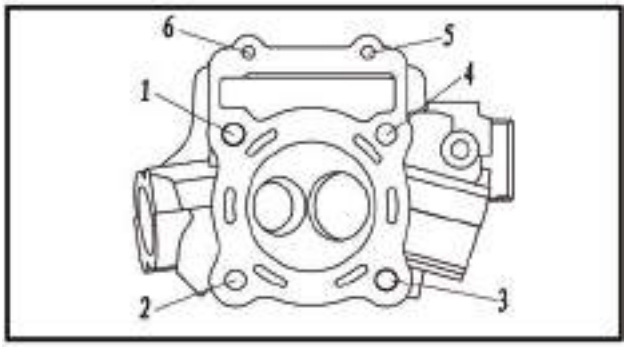

head cover and cylinder head as a set.

- cylinder head water jacket
  Mineral deposits/rust → Eliminate.

2、INSTALL

1). Installing the cylinder head

- cylinder head gasket
- cylinder head
- bolts (M9: 1 ~ 6, 38Nm)
- bolts (M6: 7, 10Nm)

NOTE:

- **Tighten the bolts in the proper sequence.**
- **Follow the numerical order shown in the illustration. Tighten the bolts in two stages.**

- timing chain guide (exhaust side)
- timing chain tensioner

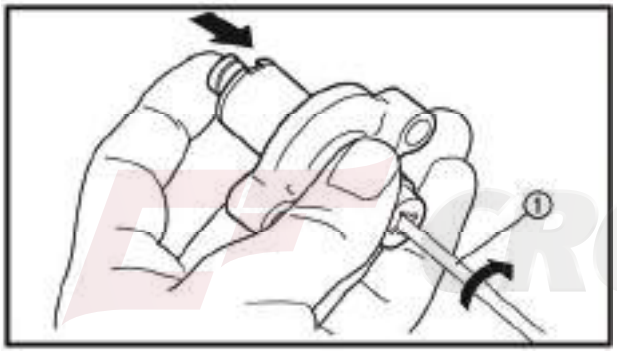

a. Lightly press the timing chain tensioner rod into the timing chain tensioner housing by hand.

b. While pressing the timing chain tensioner rod, wind it clockwise with a thin screwdriver ① until it stops.

c. With the screwdriver still inserted into the timing chain tensioner, install the timing chain tensioner and gasket onto the cylinder block. Then, tighten the timing chain tensioner bolts to the specified torque.

WARNING:

Always use a new gasket.

NOTE:

The “UP” mark on the timing chain tensioner should face up.

Timing chain tensioner bolt (10 Nm)

d. Remove the screwdriver, make sure that the timing chain tensioner rod releases, and tighten the cap bolt to the specified torque.

Timing chain tensioner cap bolt (7 Nm)

CROSSFIRE

ROCKER ARMS、VALES AND CAMSHAFT

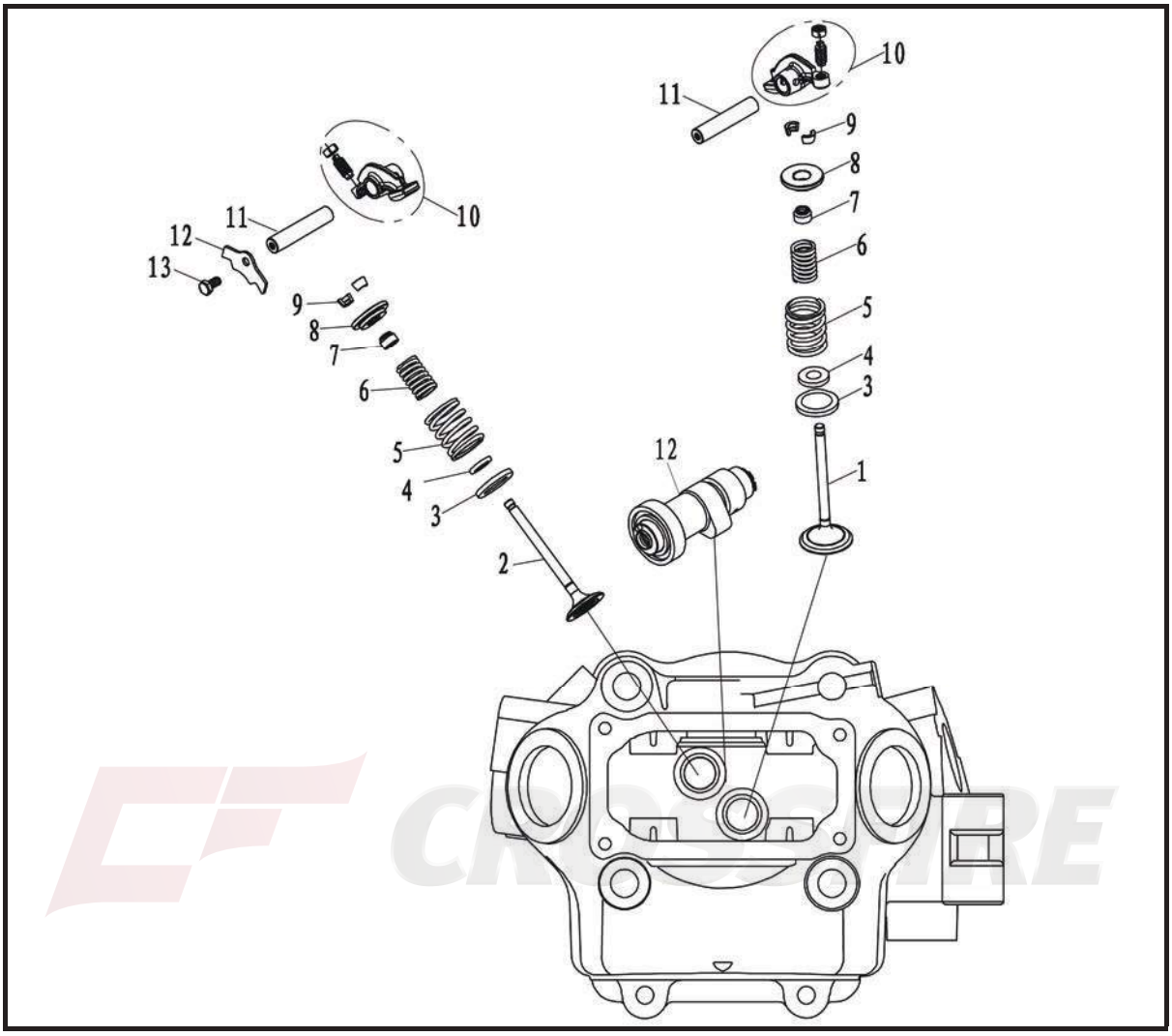

No.	Part Name	Qty	Remarks
	Removing the rocker arms and Camshaft		Remove the parts in the order listed.
1	Inlet valve	1	
2	Outlet valve	1	
3	Valve spring holder	2	
4	Inner valve spring holder	2	
5	Spring valve outer	2	
6	Spring, valve inner	2	
7	Fuel shield cover comp	2	
8	Valve seat	4	
9	Valve key	2	
10	Swing arm comp valve	2	

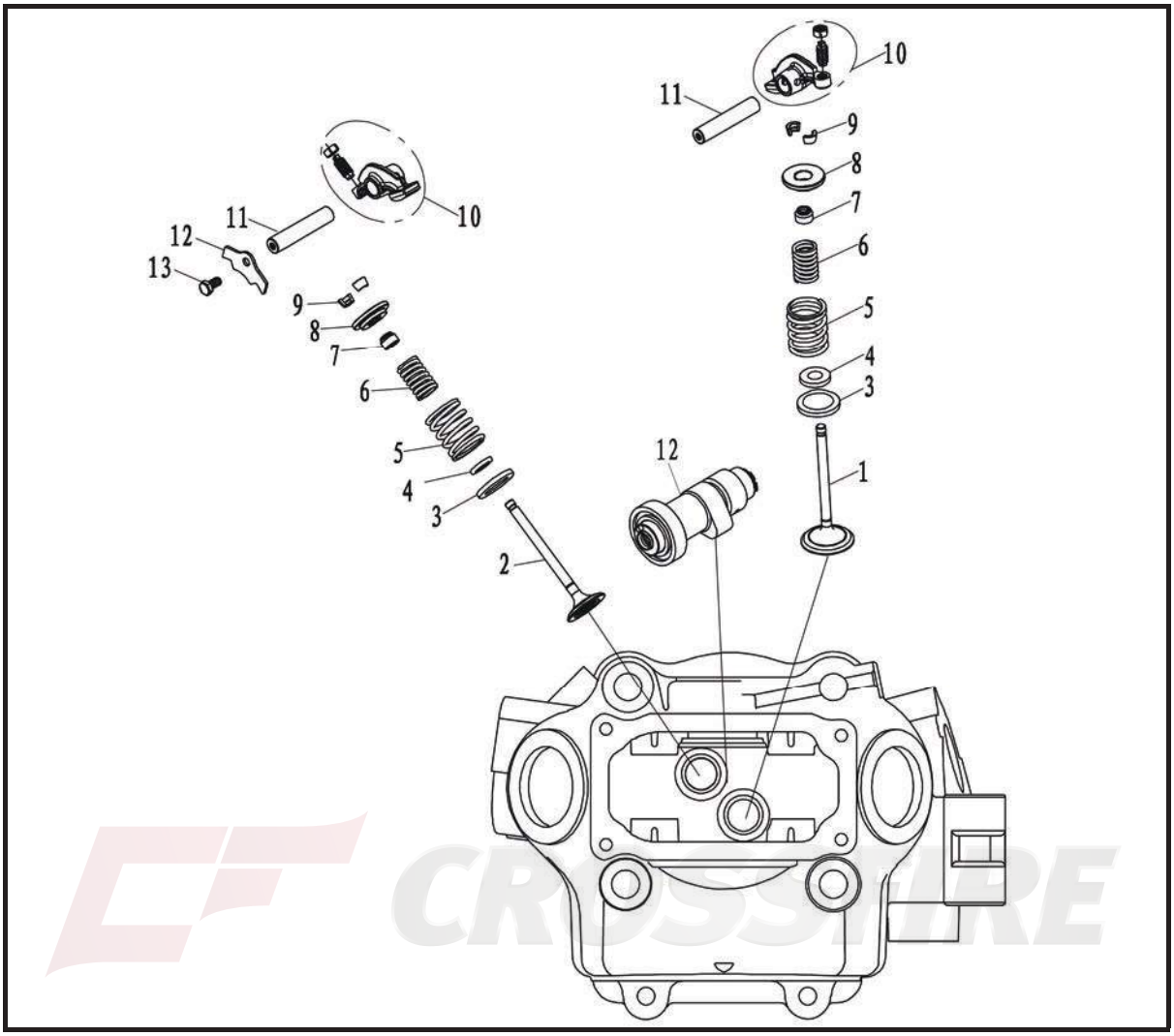

No.	Part Name	Qty	Remarks
11	Rocker shaft	2	
12	Pressure plate cam shaft	1	
13	Hexagon bolt M6×12	1	
			For installation, reverse the removal procedure.

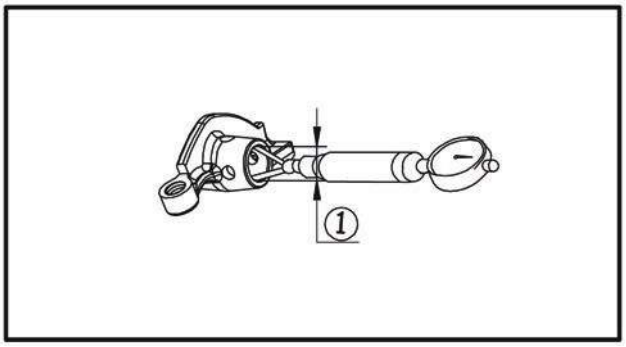

1、CHECK

1). Checking the rocker arms

- rocker arm lobes
- valve adjusters

  Blue discoloration/pitting/scratches → Replace.
- rocker arms
- rocker arm shafts

  Damage/wear → Replace.

a. Check whether the rocker arm is worn out, or damaged and whether the oil hole is blocked.

b. If there is a rocker arm to be replaced, check the camshaft prominent position of unfairness.

c. Measure the inside diameter of the rocker arm holes ①.。

Out of specification → Replace.

Rocker arm inside diameter repairing limit value **Φ12.05mm**

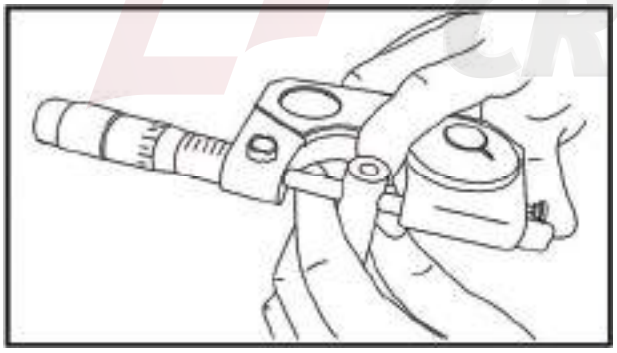

d. Check the surface of the rocker arm shafts.

Worn/pitting/scratches → Replace.

e. Measure the external diameter of rocker arm shaft with micrometer.

Out of specification → Replace.

Rocker arm shaft outside diameter repairing limit value **Φ11.96mm**

f. Calculate the clearance by subtracting the rocker arm shaft outside diameter from the rocker arm inside diameter.

Out of specification → Replace the defective part(s).

Rocker arm to shaft clearance repairing limit value **0.06mm**

2). Checking the camshaft

CROSSFIRE

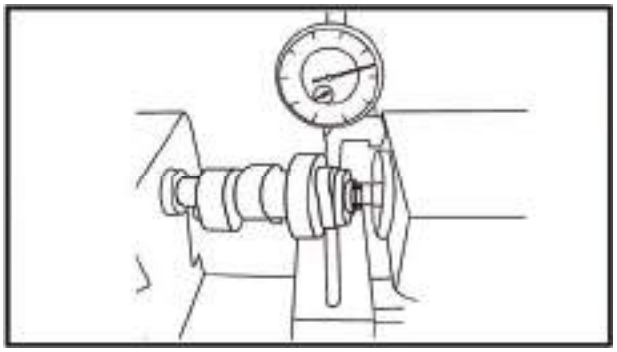

• cam lobes

Pitting/scratches/blue discoloration → Replace

• camshaft journal

Wear/damage → Replace

• Measure the external diameter of camshaft journal with micrometer.

Out of specification → Replace.

• small holes on camshaft sprocket

• rotor "I" mark

Out of alignment

3). Checking the camshaft sprocket

• camshaft sprocket

Wear/damage → Replace the camshaft sprocket and timing chain as a set.

(a)1/4 of a tooth

(b)Correct

① Timing chain

② Sprocket

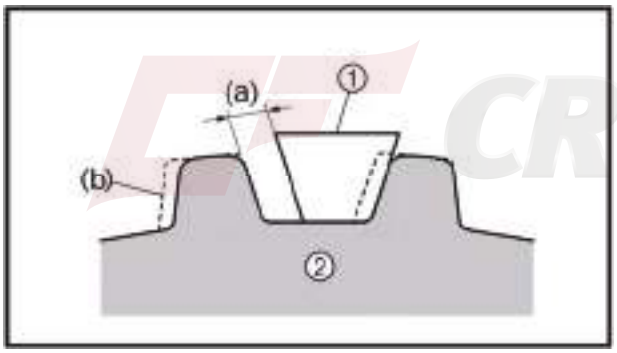

CROSSFIRE

4). Checking the decompression system

• decompression system

Check while the camshaft sprocket is installed on the camshaft.

2、INSTALL

1). Installing the rocker arms

• rocker arms

• rocker arm shafts

NOTE:

• After installation, make sure that the thread hole of the rocker arm shaft is positioned correctly.

2). Installing the camshaft

• camshaft

• camshaft sprocket

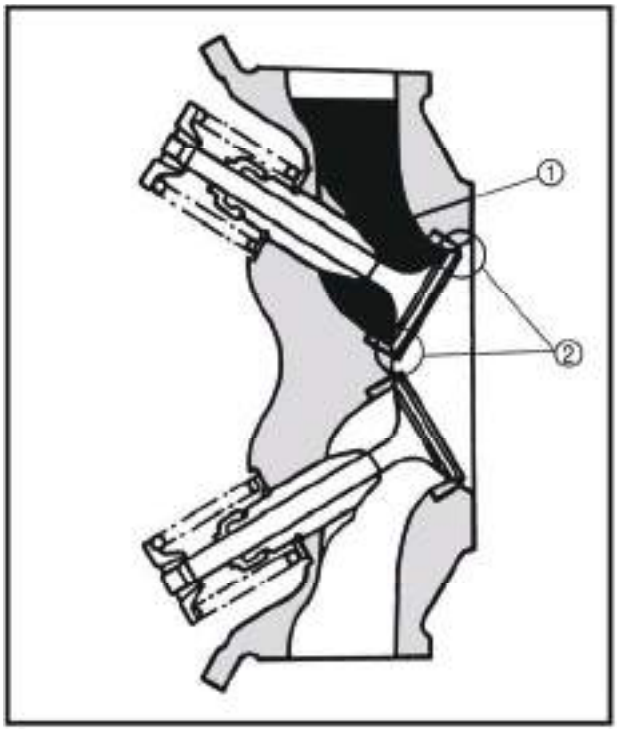

1、CHECK

• valve sealing

Leakage at the valve seat → Check the valve face, valve seat and valve seat width.

a. Pour a clean solvent ① into the intake and exhaust ports.

b. Check that the valve seals properly. There should be no leakage at the valve seat ②.

• valve face

Pitting/wear → Grind the face.

• valve stem end

Mushroom shape or diameter larger than the body of the stem → Replace.

• valve seats

Pitting/wear → Reface the valve seat.

2、MEASURE:

1).Measure:

• The valves surface width

Repairing limit value 2.0mm

• stem-to-guide clearance

Stem-to-guide clearance = valve guide inside diameter – valve stem diameter

NOTE:

If the mating surface is coarse, corrode or cannot contact with valve seat normally, replace it.

Stem-to-guide clearance repairing limit value **Intake:0.08mm Exhaust:0.10mm**

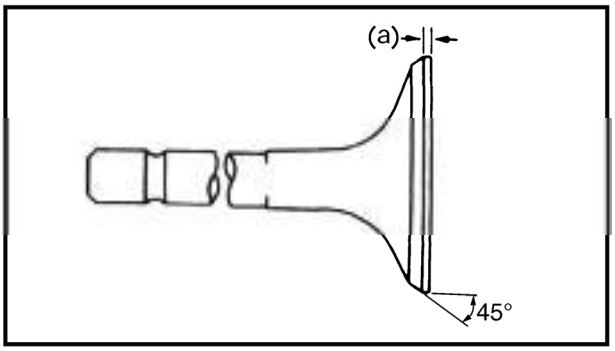

• margin thickness (a)

Out of specification → Replace.

Margin thickness **Intake:2 mm** **Exhaust:2.2 mm**

• valve stem runout

Out of specification → Replace.

Runout limit 0.01 mm

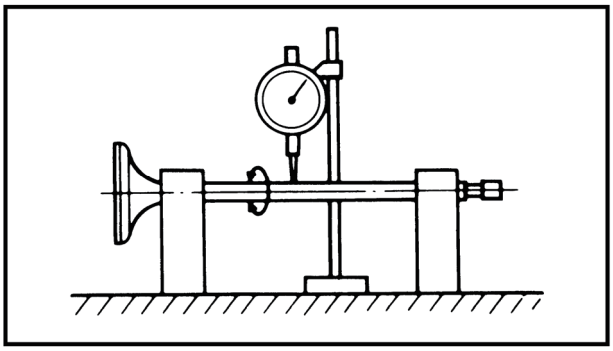

NOTE:

• When installing a new valve always replace the guide.

• If the valve is removed or replaced always replace the oil seal.

• The valve seat surface width

Out of specification → Reface the valve seat.

Repairing limit value
2.0mm

a. Install the valve into the cylinder head.

b. Press the valve through the valve guide and onto the valve seat to make a clear pattern.

c. Measure the valve seat width. Where the valve seat and valve face made contact, blueing will have been removed.

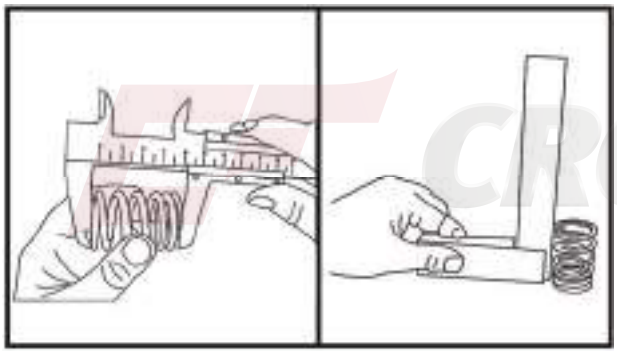

• Valve spring free length

• Valve spring squareness

Out of specification → Replace.

Valve spring free length
Intake:44.9mm Exhaust44.9mm
Valve spring squareness
Intake:1.60mm Exhaust 1.60mm

• compressed spring force(a)

Out of specification → Replace.

(b) Installed length

Compressed spring force
Intake: 470 N at 24.5 mm
Exhaust: 270 N at 31.0 mm

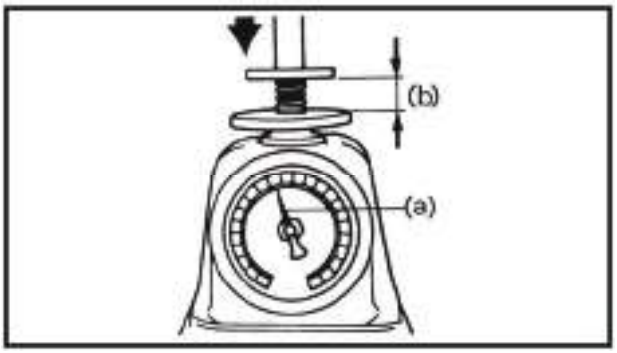

2). Remove:

• valve guide

NOTE:

To ease guide removal, installation and to maintain correct fit, heat the cylinder head to 100 °C (212 °F) in an oven.

a. Install the new valve guide using a valve guide remover ① and valve guide installer ②.

b. After installing the valve guide, bore the valve guide using a valve guide reamer ③ to obtain proper stem-to-guide clearance.

CROSSFIRE

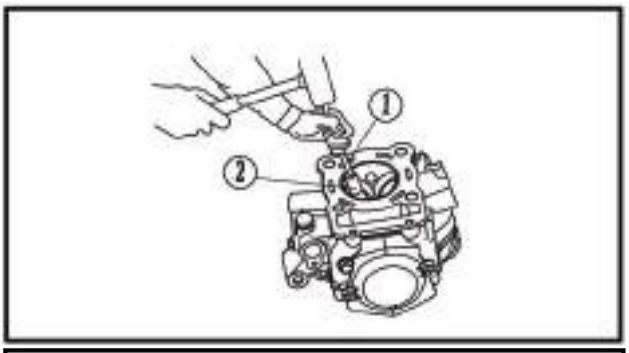

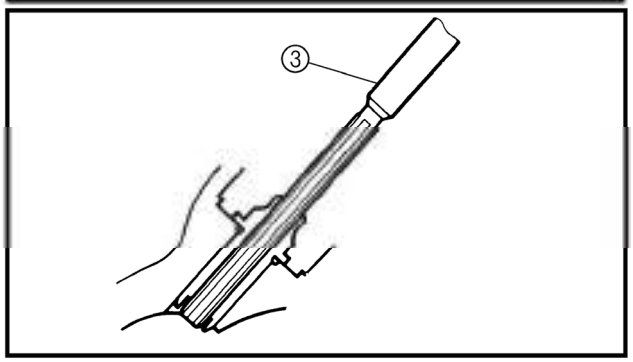

NOTE:
After replacing the valve guide reface the valve seat.

c. If the valve seat is to wide or narrow or cracked, grind it to ensure impermeability.

3). Lap:

- valve face
- valve seat

NOTE:
After reface the valve seat or replacing the valve and valve guide, the valve seat and valve face should be lapped.

a. If the pipe will be replaced, grind the valve seat again.

CAUTION:
Do not let the compound enter the gap between the valve stem and the guide.

CROSSFIRE

b. Install the valve into the cylinder head.

c. Turn the valve until the valve face and valve seat are evenly polished, then clean off all of the compound.

NOTE:
For best lapping results, lightly tap the valve seat while rotating the valve back and forth between your hands.

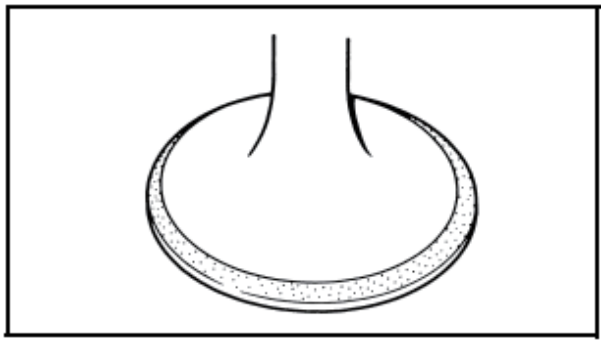

d. Apply a fine lapping compound to the valve face and repeat the above steps.

NOTE:
After every lapping operation be sure to clean off all of the compound from the valve face and valve seat.

e. Install the valve into the cylinder head.

g. Press the valve through the valve guide and onto the valve seat to make a clear pattern.

h. Measure the valve seat width again. If the valve seat width is out of specification, reface and relapse the valve seat.

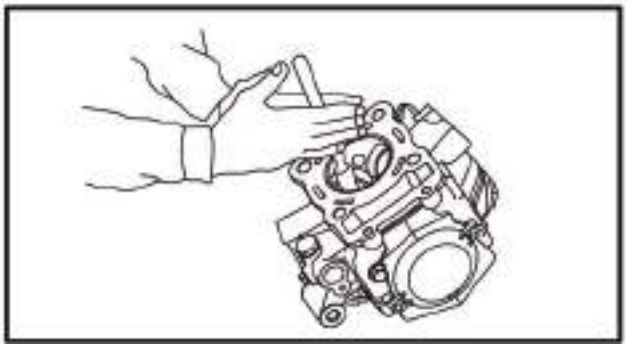

3、INSTALL:

1). Apply:

• molybdenum disulfide oil (onto the valve stem and valve stem seal)

2). Install:

- valve spring seats
- valve stem seals
- valves
- valve springs
- valve spring retainers

NOTE:

Install the valve springs with the larger pitch (a) facing upwards.

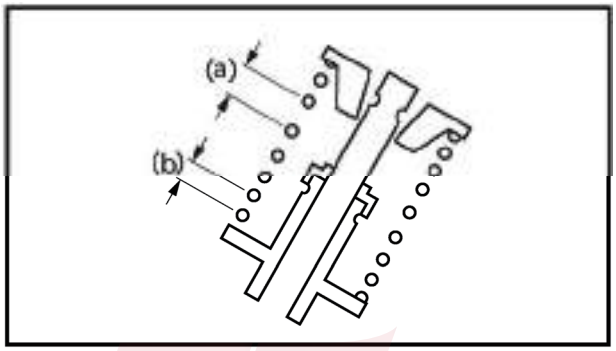

(b) Smaller pitch

- valve cotters

NOTE:

Install the valve cotters while compressing the valve spring with the valve spring compressor ① and valve spring compressor attachment ②.

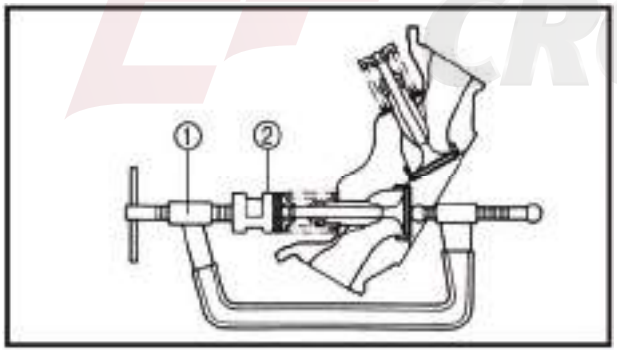

CROSSFIRE

CYLINDER AND PISTON

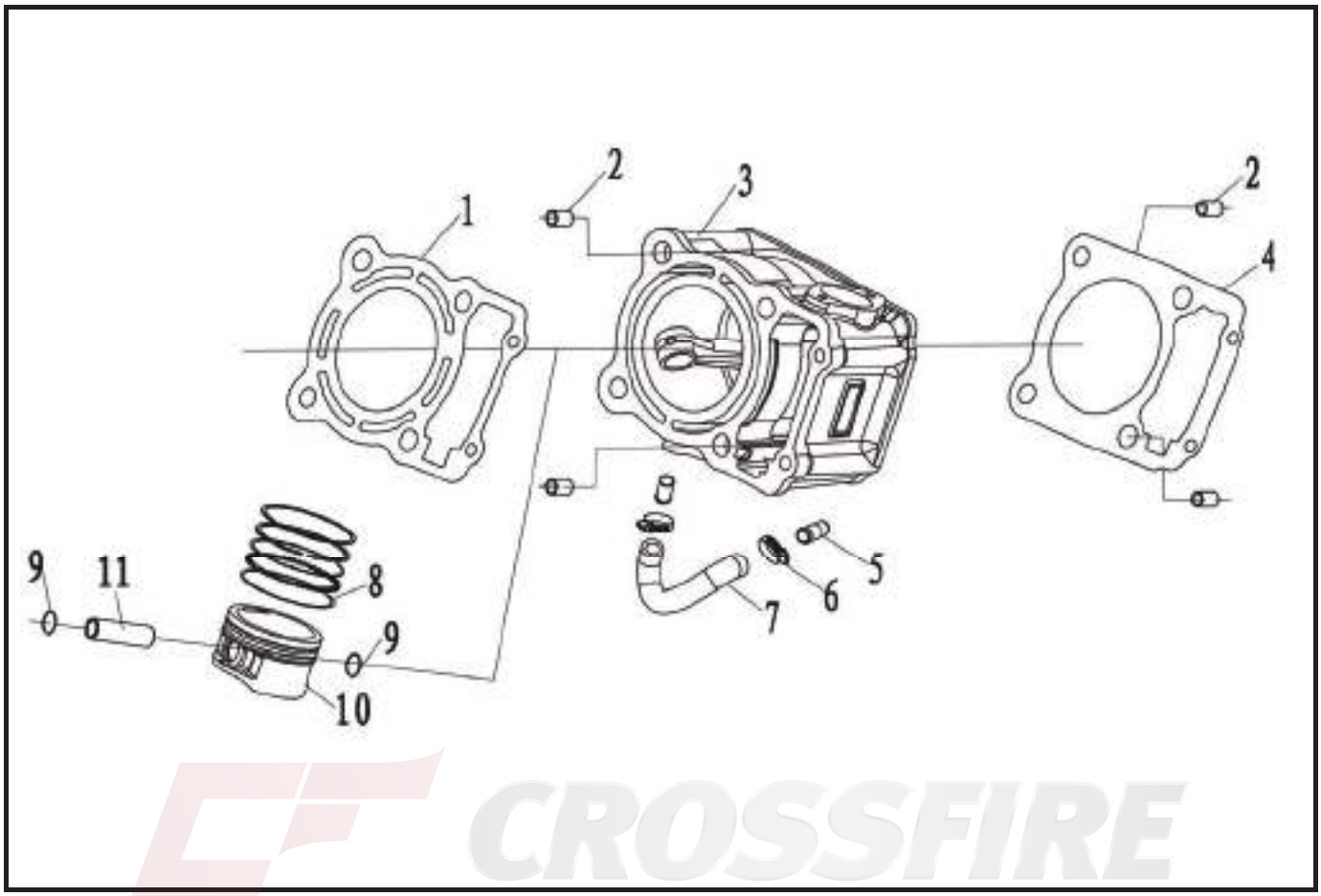

No.	Part Name	Qty	Remarks
	Removing the cylinder and piston		Remove the parts in the order listed.
1	Cylinder head gasket	1	
2	Location pin Φ12×16	4	
3	Cylinder body comp	1	
4	Gasket cylinder body	1	
5	Water pipe connector Φ18	1	
6	Hoop 12/20	2	
7	Water pipe	1	
8	Piston ring	1	
9	Circlip piston pin	2	
10	Piston	1	
11	Piston pin	1	
			For installation, reverse the removal procedure.

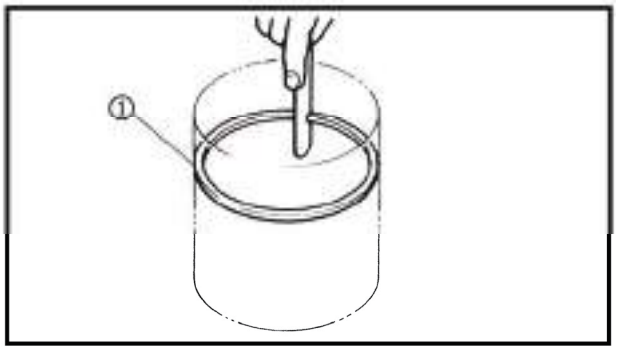

1、CHECK

1).Checking the cylinder and piston

- cylinder and piston walls Vertical scratches → Rebore or replace the cylinder and the piston.

2).Checking the piston rings

- piston ring

(Insert in cylinder piston ring will be ① ,and measure the end gap.)

NOTE:

Check whether the piston and the piston groove is cracked and abraded.

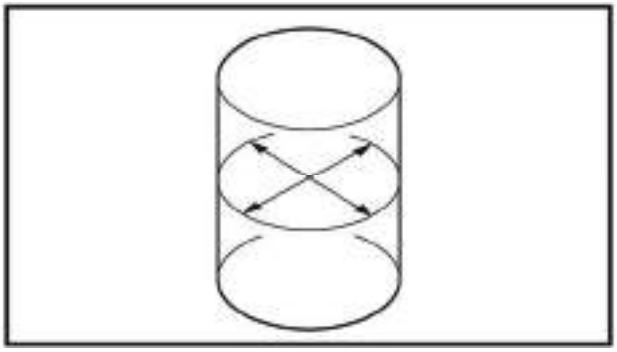

3).Checking the piston pin

- piston pin

Blue discoloration/grooves → Replace, then check the lubrication system.

2、MEASURE

- At the top, the middle and the bottom of the piston stroke.

NOTE:

Measure the bore diameter at directions of right-angle intersection.

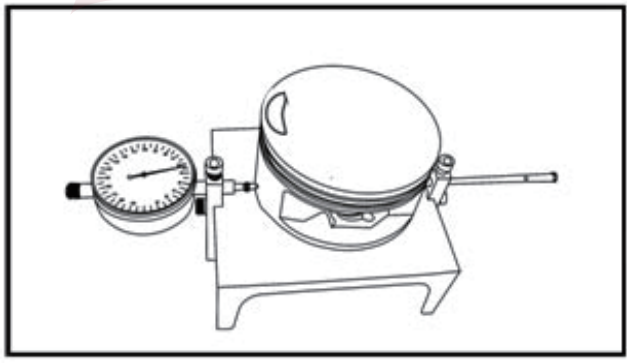

Repairing limit value
Out of roundness:0.10mm
Taper:0.10mm

- The external diameter 10mm above the bottom of the piston skirt.。

NOTE:

Repair limit on the clearance between the piston and cylinder.

Repairing limit value 0.10mm

- ring end gap

Out of specification → Replace.

Repairing limit value
Top ring/2nd ring:0.5mm

CF CROSSFIRE

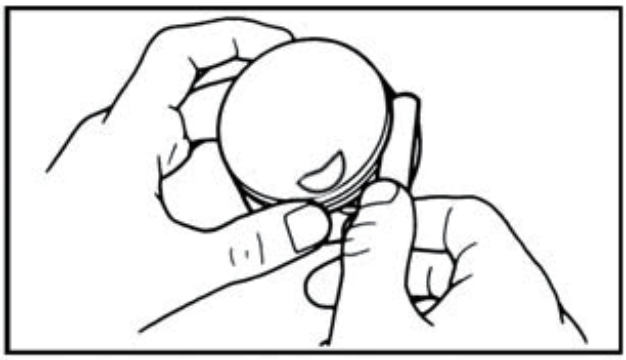

• ring side clearance
Use a thickness gauge.
Out of specification → Replace the piston and rings as a set.

NOTE:

Clean carbon from the piston ring grooves and rings before measuring the side clearance.

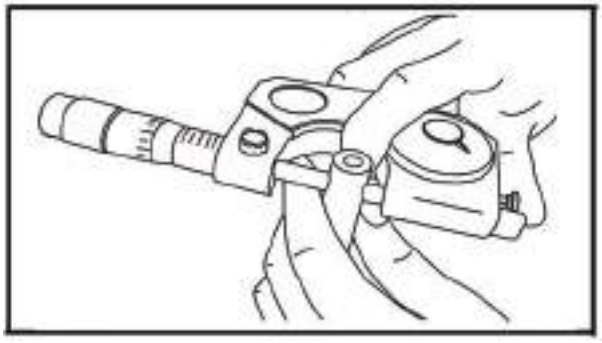

	Side clearance	
	Standard	Limit
Top ring	0.04~0.08mm	0.13mm
2nd ring	0.03~0.07mm	0.13mm

• piston pin-to-piston clearance.

a. Measure the piston pin outside diameter.

b. Measure the piston pin bore inside diameter.

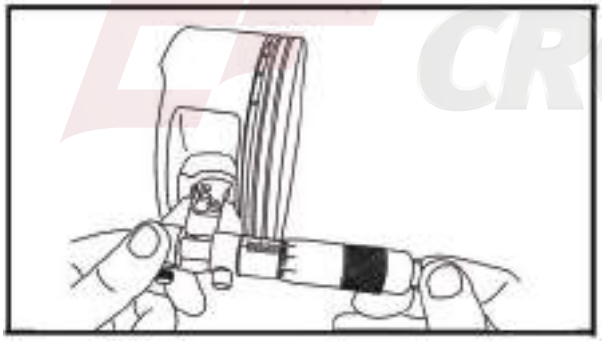

Repairing limit value
0.08mm

c. Calculate the piston pin-to-piston clearance with the following formula.

Piston pin-to-piston clearance = Piston pin bore inside diameter – Piston pin outside diameter

d. If out of specification, replace the piston.

3、**INSTALL**:

1). Installing the piston

• piston rings (onto the piston)

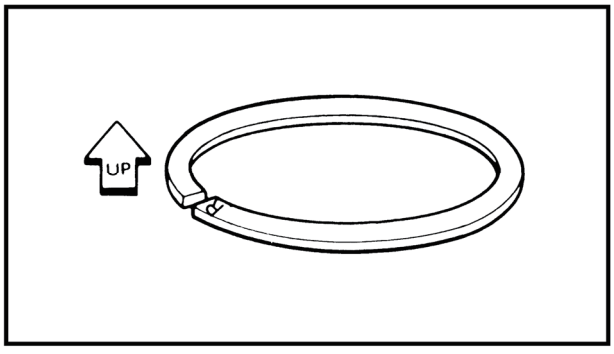

NOTE:

- **Be sure to install the piston rings so that the manufacturer's marks or numbers are located on the upper side of the rings.**
- **Lubricate the piston and piston rings liberally with engine oil.**

• piston ①
• piston pin ②
• piston pin clips ③ (new replacement)

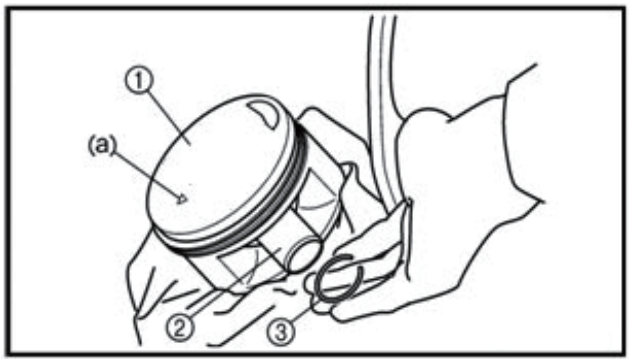

NOTE:

- **Apply engine oil onto the piston pin, piston rings and piston.**
- **Be sure that the arrow mark a on the piston points to the exhaust side of the engine.**
  - **Before installing the piston pin clip, cover the crankcase with a clean rag to prevent the piston pin clip from falling into the crankcase.**

2). Installing the cylinder

- cylinder
- O-ring

NOTE:

Install the cylinder with one hand while compressing the piston rings with the other hand.

CAUTION:

- **Be careful not to damage the timing chain guide during installation.**
- **Pass the timing chain through the timing chain cavity.**

CROSSFIRE

ENGINE LEFT CRANKCASE COVER AND A.C. MAGNETO

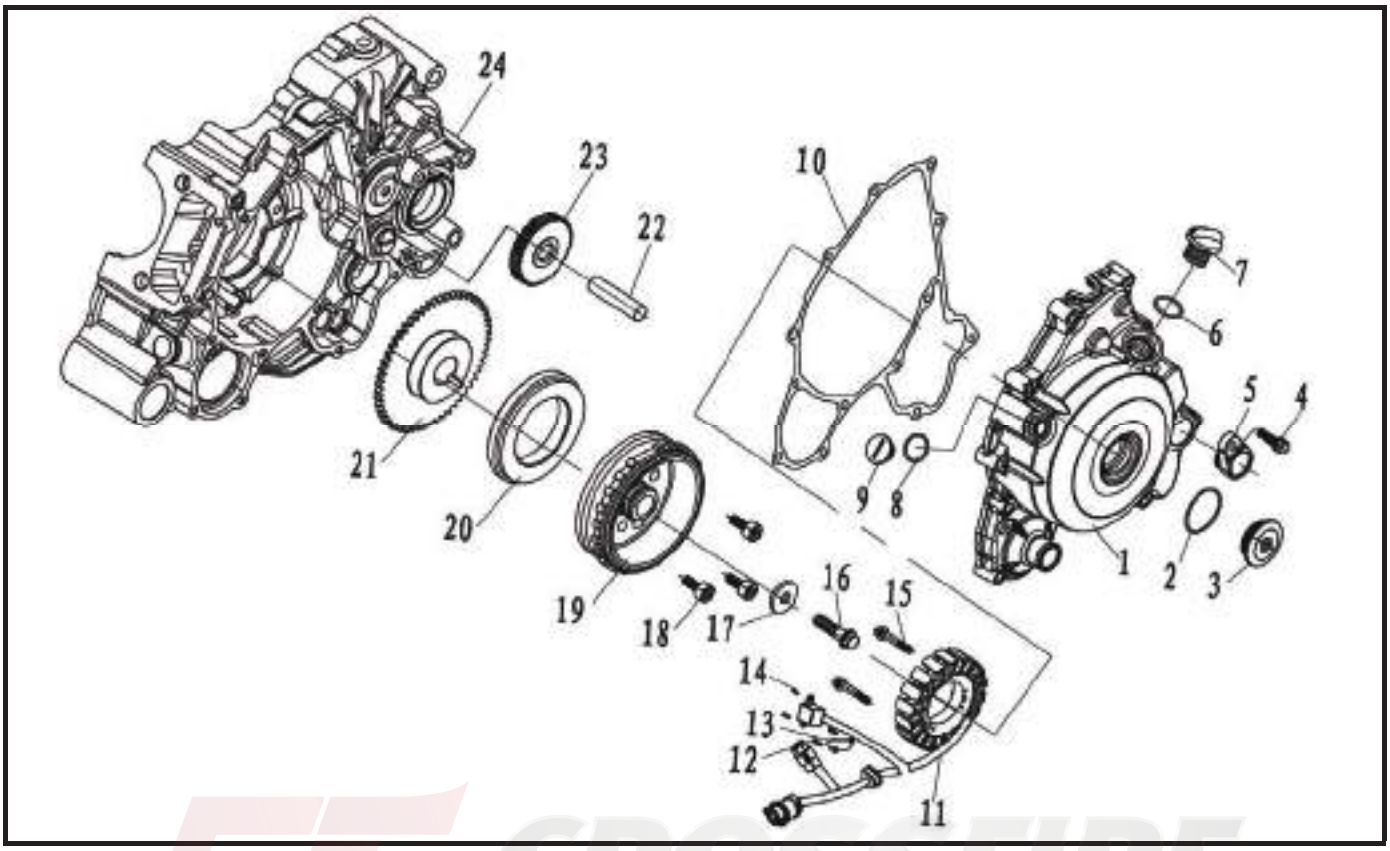

No.	Part Name	Qty	Remarks
	Removing the engine left crankcase over and A.C. magneto		Remove the parts in the order listed.
	Engine oil		
	Water pump assembly		
1	Left crankcase cover	1	
2	O-ring 20.7×2.5	1	
3	Hand hole cover	1	
4	Flange bolt M6×16	1	
5	Gear sensor	1	
6	O-ring 20.7×2.6	1	
7	Oil plug	1	
8	O-ring 13.4×2.35	1	
9	Man head	1	
10	R. Crank case gasket	1	
11	Stator comp	1	
12	Hexagon socket head screws M5×12	2	

CROSSFIRE

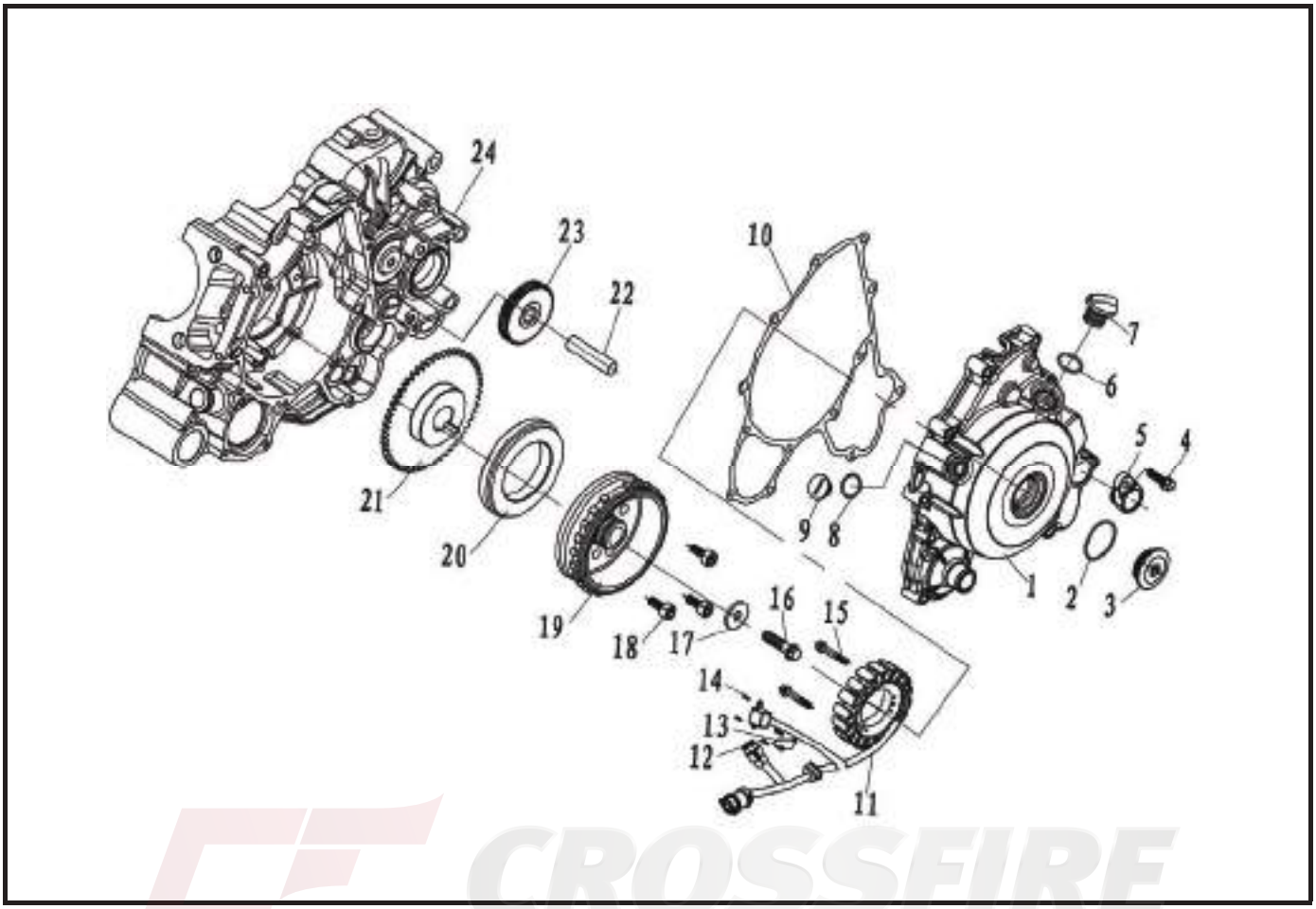

CROSSFIRE

No.	Part Name	Qty	Remarks
13	Tension disc	1	
14	Hexagon socket head screws M4×12	2	
15	Flange bolt M6×35	2	
16	Bolt M10×1.25×40	1	
17	Washer 10×32×5	1	
18	Hexagon socket head cap screws M8×16	3	
19	Rotor comp	1	
20	One way machine comp	1	
21	Balanced initiative gear	1	
22	Pair gearwheel shaft	1	
23	Pair gearwheel	1	
24	Left crankcase comp	1	
			For installation, reverse the removal procedure.

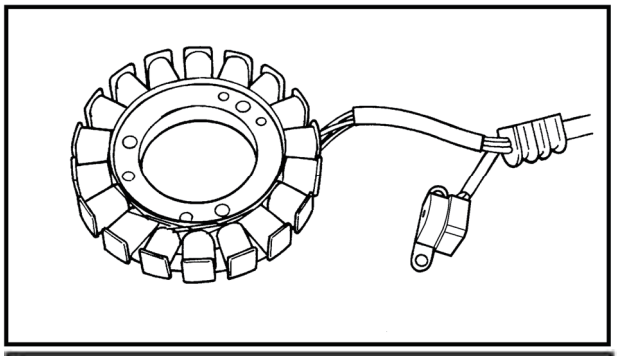

1、CHECK

1). Checking the A.C.magneto

- stator coil
- pickup coil

Damage → Replace.

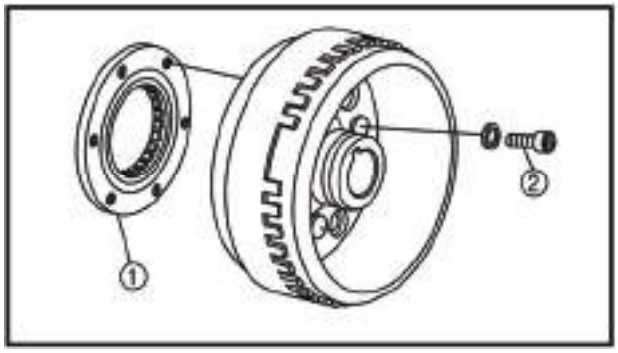

2). Checking the starter clutch

- starter clutch ①

Cracks/damage → Replace.

- starter clutch bolts ②

Loose → Replace with new ones, and clinch the end of the bolts.

NOTE:

- **The arrow mark on the starter clutch must face inward, away from the A.C. magneto rotor.**
- **When installing, apply the locking agent.**

CROSSFIRE

a. Install the starter wheel gear onto the starter clutch, and hold the starter clutch.

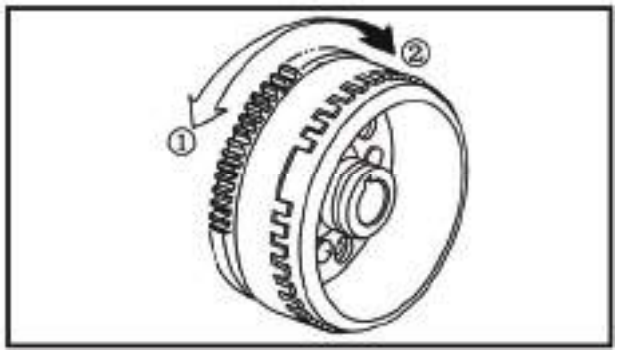

b. Turn the starter wheel gear counterclockwise ① to check that the starter clutch and wheel gear engage.

If the starter clutch and wheel gear do not engage, replace the starter clutch.

c. Turn the starter wheel gear clockwise ② to check the starter wheel gear for smooth operation. If operation is not smooth, replace the starter clutch.

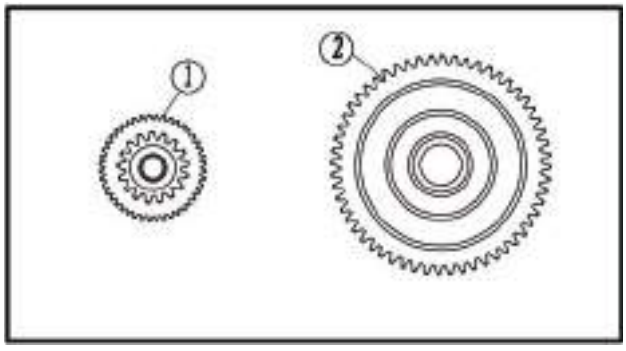

- starter idle gear teeth ①
- starter wheel gear teeth ②

Burrs/clips/roughness/wear → Replace.

- starter wheel gear (contacting surface)

Damage/pitting/wear → Replace.

2、INSTALL

- woodruff key
- dowel pins
- A.C. magneto rotor

NOTE:

- **Before installing the rotor, clean the outside of the crankshaft and the inside of the rotor.**

- **After installing the rotor, check that the rotor rotates smoothly. If not, reinstall the key and rotor.**

- dowel pins
- gasket (New replacement)

CROSSFIRE

STARTER MOTOR AND WATER PUMP

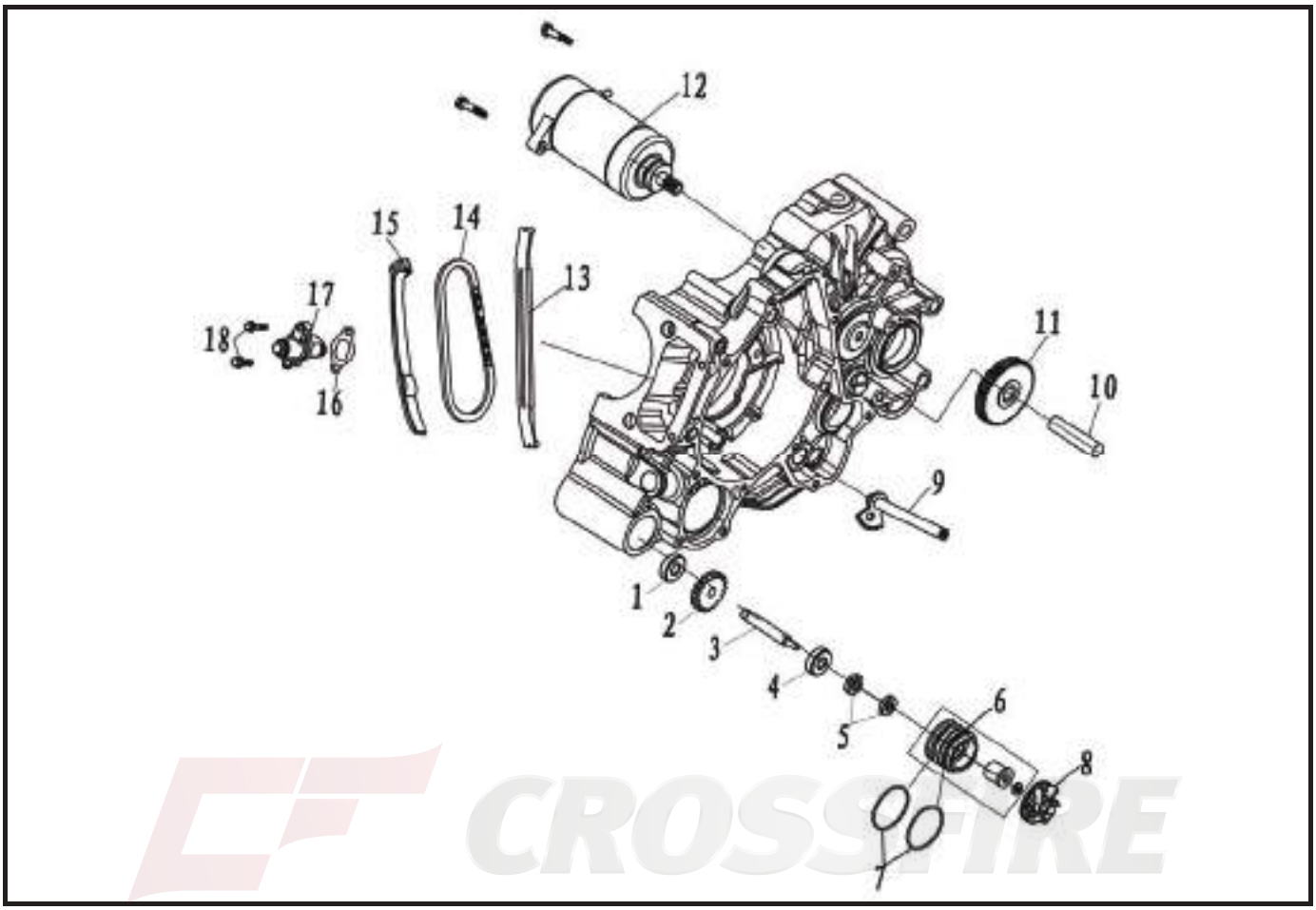

No.	Part Name	Qty	Remarks
	Removing the starter motor and water pump		Remove the parts in the order listed
1	Needle pin HK1010	1	
2	Water pump driven gear	1	
3	Water pump shaft	1	
4	Bearing 6000	1	
5	Oil seal 10×20×5	2	
6	Water pump bearing soleplate	1	
7	O-ring 38.5×2.5	2	
8	Water pump vane	1	
9	Shift arm components	1	
10	Pair gearwheel shaft	1	
11	Pair gearwheel	1	
12	Start motor	1	

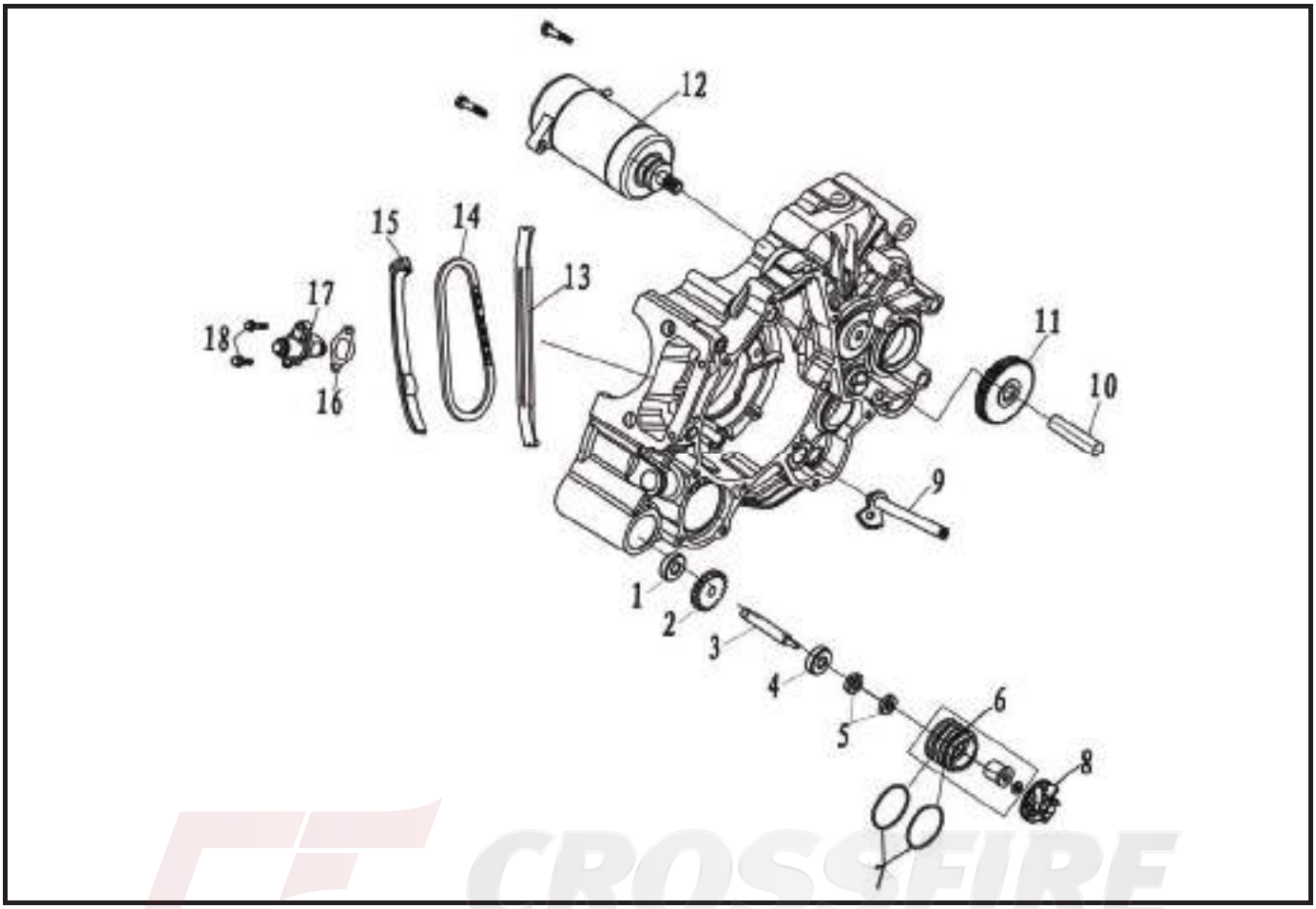

No.	Part Name	Qty	Remarks
13	Tensioner plate assy	1	
14	Timing chain 102	1	
15	Guide plate	1	
16	Tensioner gasket	1	
17	Tensioner assy	1	
18	Flange bolt M6×16	2	
			For assembly, reverse the disassembly procedure.

RIGHT CRANKCASE COVER AND OIL FILTER

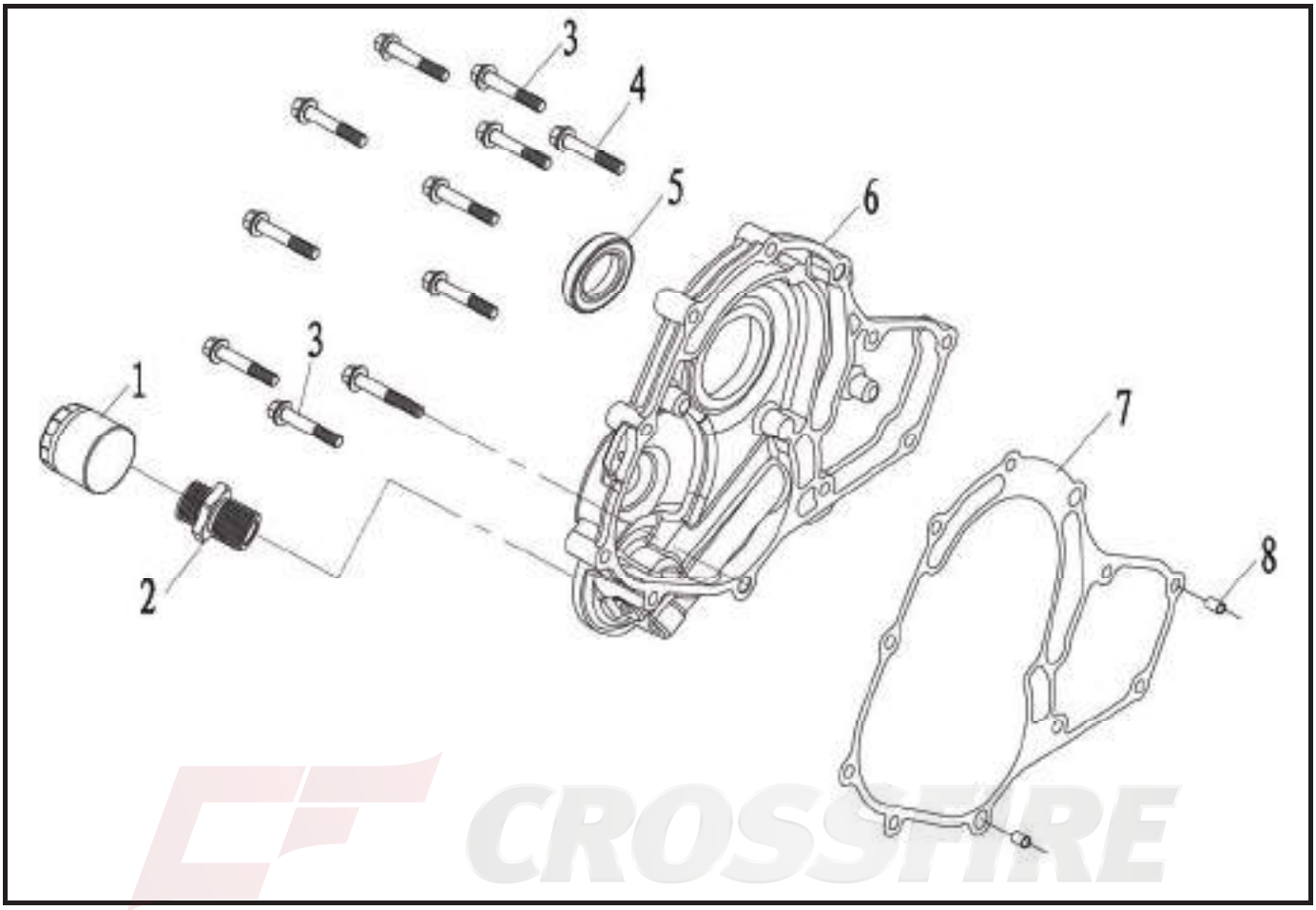

No.	Part Name	Qty	Remarks
	Removing the right crankcase cover and oil filter		Remove the parts in the order listed
1	Oil filter group	1	
2	Connecting head filter	1	
3	Flange bolt M6×40	2	
4	Flange bolt M6×355	8	
5	Oil seal 32×47×7	1	
6	R. Crank case cover	1	
7	R. Crank case gasket	1	
8	Dowel Pin Φ8×12	2	
			For assembly, reverse the disassembly procedure.

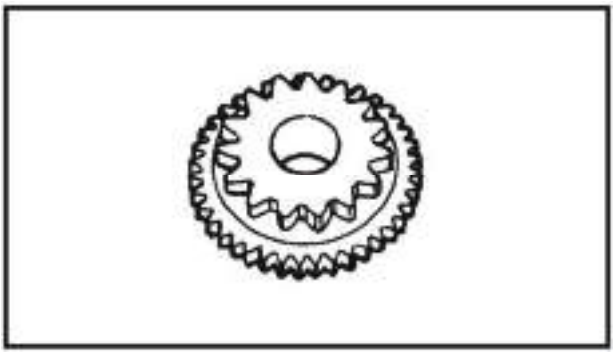

1、CHECK

1) Checking the starter idle gear

• starter idle gear

Cracks/wear/damage → Replace

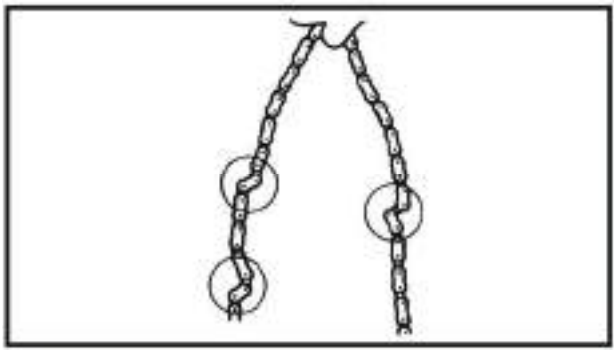

2) Checking the timing chain and guides

• timing chain

Cracks/stiff → Replace the timing chain and camshaft sprocket as a set.

• timing chain guides

Wear/damage → Replace.

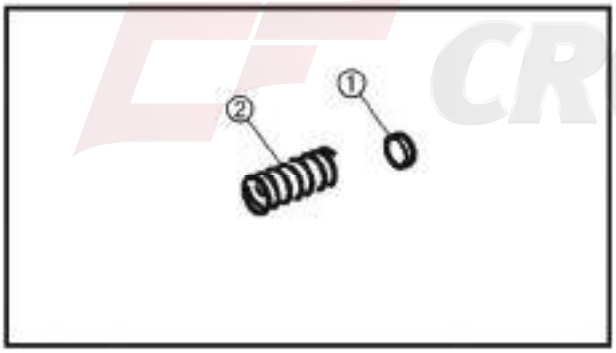

CROSSFIRE

3) Checking the relief valve spring

• relief valve steel ball ①

• relief valve spring ②

Damage/wear → Replace the defective part(s).

4) Checking the oil filter cartridge

• Oil filter cartridge

Damage → Replace.

Contaminants → Clean with engine oil.

5) Checking the starter motor

• starter motor

Damage/wear → Replace the defective part(s).

2、INSTALL

• starter motor

• oil filter cartridge

• Starter idle gear shaft

• Starter idle gear

NOTE:

Apply the molybdenum disulfide grease to the thread of axle and nut.

PRIMARY AND SECONDARY SHEAVES

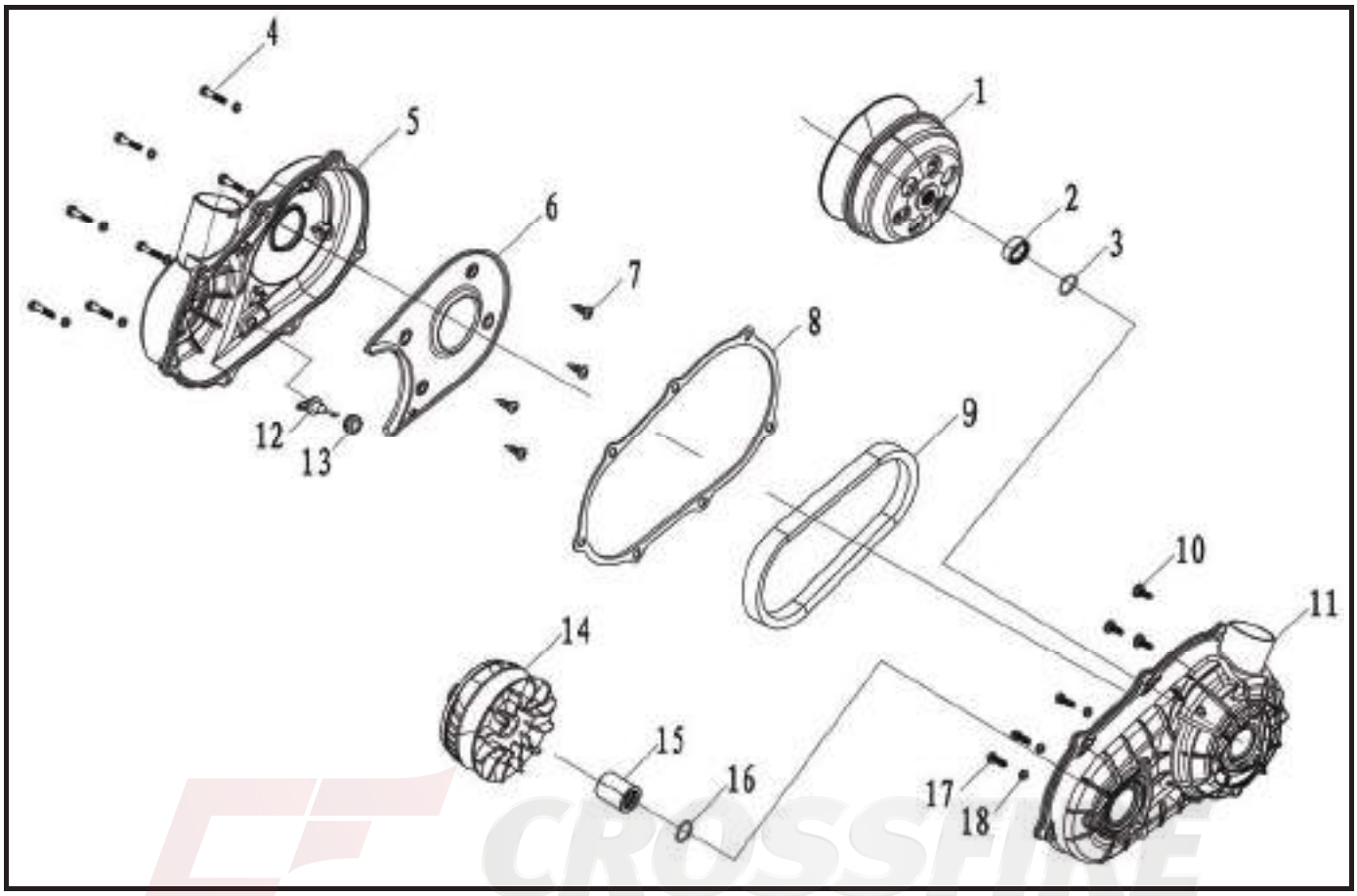

No.	Part Name	Qty	Remarks
	Removing the primary and secondary sheaves		Remove the parts in the order listed.
	Engine assembly		
1	Secondary clutch components	1	
2	Bush Φ30×12	1	
3	O-ring 20×2.3	2	
4	Flange bolt M6×30	6	
5	Cover comp clutch	1	
6	Clapboard	1	
7	Countersunk head tapping screws 4.2×16	1	
8	Gasket-clutch cover	1	
9	CVT drive belt	1	
10	Hexagon socket countersunk head screws M6×20	3	

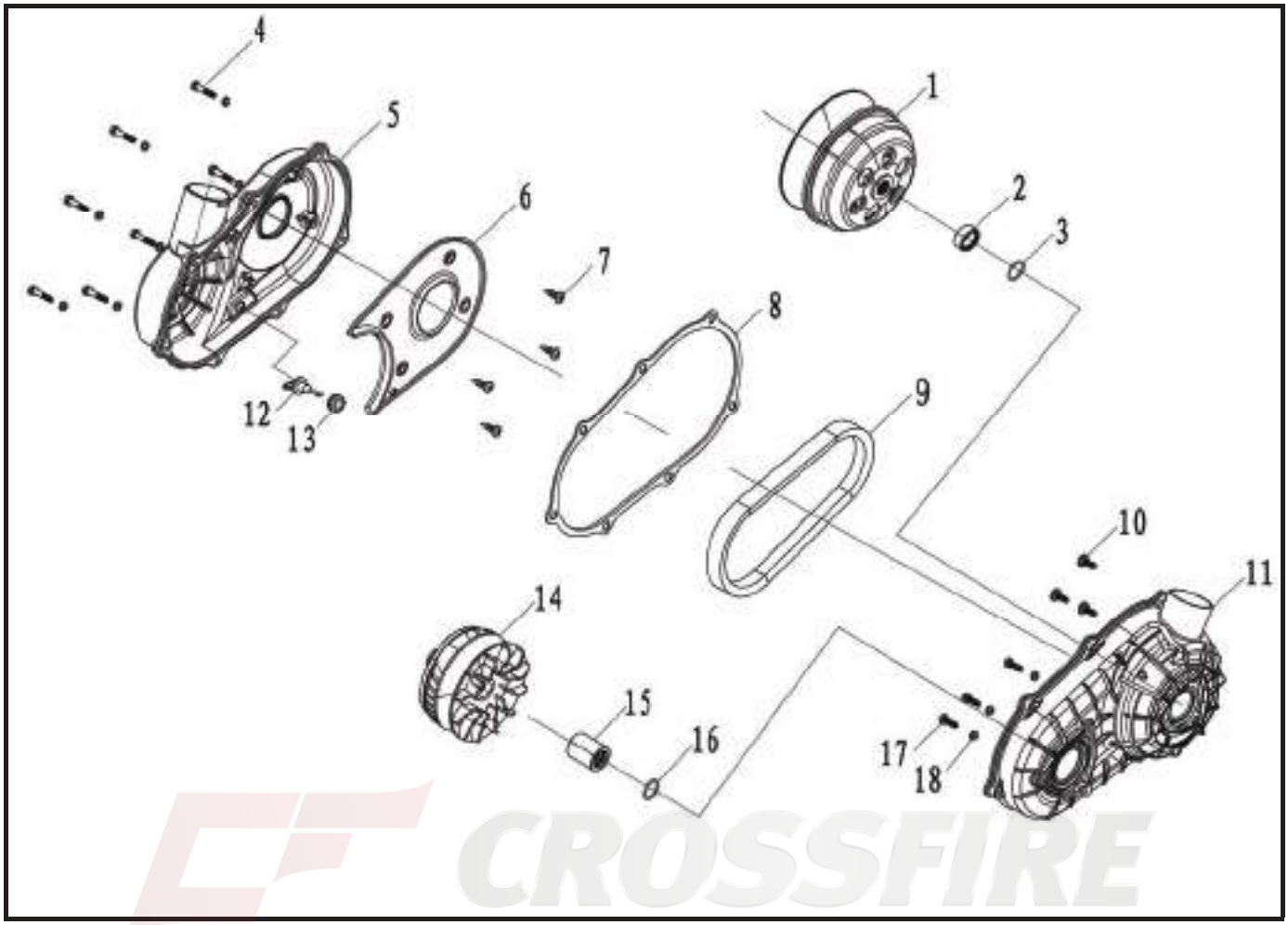

No.	Part Name	Qty	Remarks
11	Cover seat comp clutch	1	
12	Piled head clutch cover	1	
13	Rubber sheath	1	
14	Primary clutch component	1	
15	Bush Φ32×40	1	
16	O-ring 20.7×2.6	1	
17	Flange bolt M6×25	3	
18	Bush Φ6.5×5	3	
			For assembly, reverse the disassembly procedure.

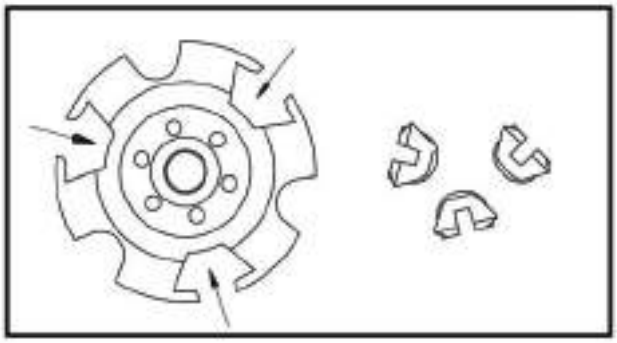

1、Check

1). Checking the primary sheave

- primary pulley slider
- primary sliding sheave splines
  Wear/cracks/damage → Replace.
- spacer
- primary pulley cam
  Cracks/damage → Replace.

- primary sliding sheave
- primary fixed sheave
  Cracks/damage → Replace.

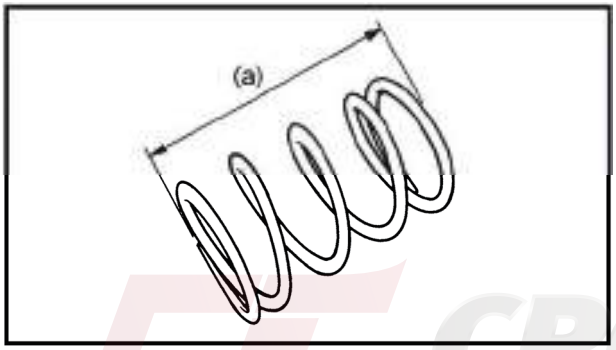

2、Measure

- secondary sheave spring free length (a)
  Out of specification → Replace the secondary sheave spring.

CROSSFIRE

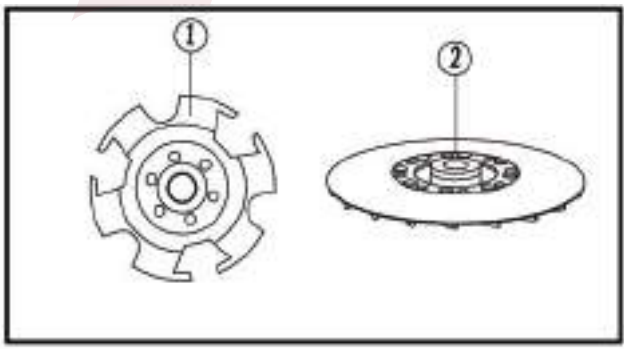

3、INSTALL

1). Assembling the primary sheave

(1)Clean:

- slope plate ①
- Disk drive ②

NOTE:

Remove any excess grease.

(2)Install:

- Cylindrical roller ①

NOTE:

- **Apply grease (90g) to the whole outer surface of the weights and install.**
- **Apply grease to the inner surface of the collar.**
- **Apply grease to the inner surface of the primary sliding sheave.**

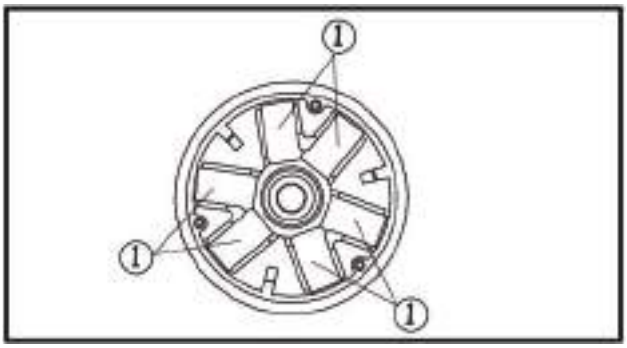

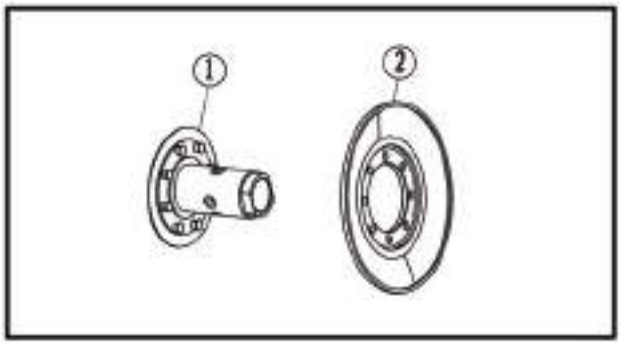

2). Assembling the secondary sheave

(1)Apply:

• assembly lube(to the fixed shaftsheave ① inner surface and oil seals)。

• assembly lube (to the bearings, oil seals and inner surface of the Mobile disk②)

3). Installing the primary and secondary sheaves

(1) Install:

• Mobile disk

• V-belt

• primary sheave assembly

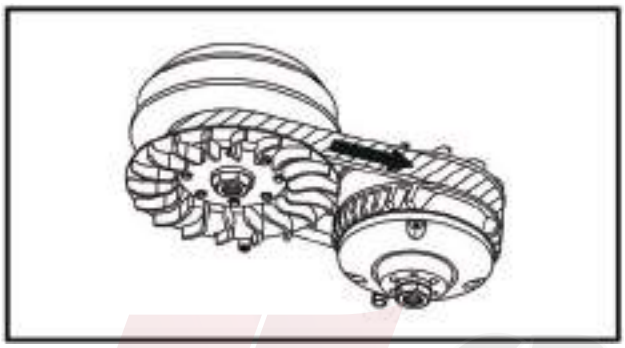

NOTE:

- **Tightening the bolts will push the secondary sliding sheave away, causing the gap between the secondary fixed and sliding sheaves to widen.**
- **Install the V-belt so that its right faces the direction show in the illustration.**

CROSSFIRE

(2)Tighten:

• primary sheave nut (70Nm)

• secondary sheave nut (50Nm)

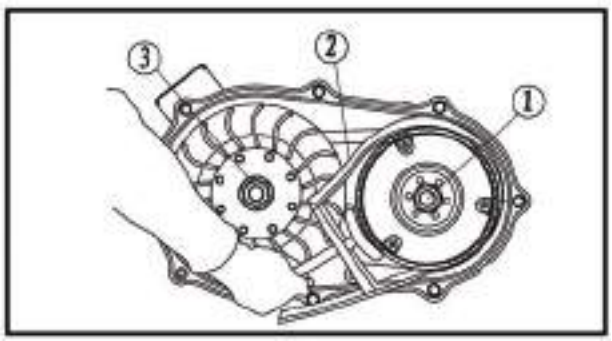

NOTE:

- **Use the sheave holder to hold the primary sheave.**
- **First, tighten the primary sheave nut , then tighten the secondary sheave nut .**

CRANKCASE AND OIL PUMP

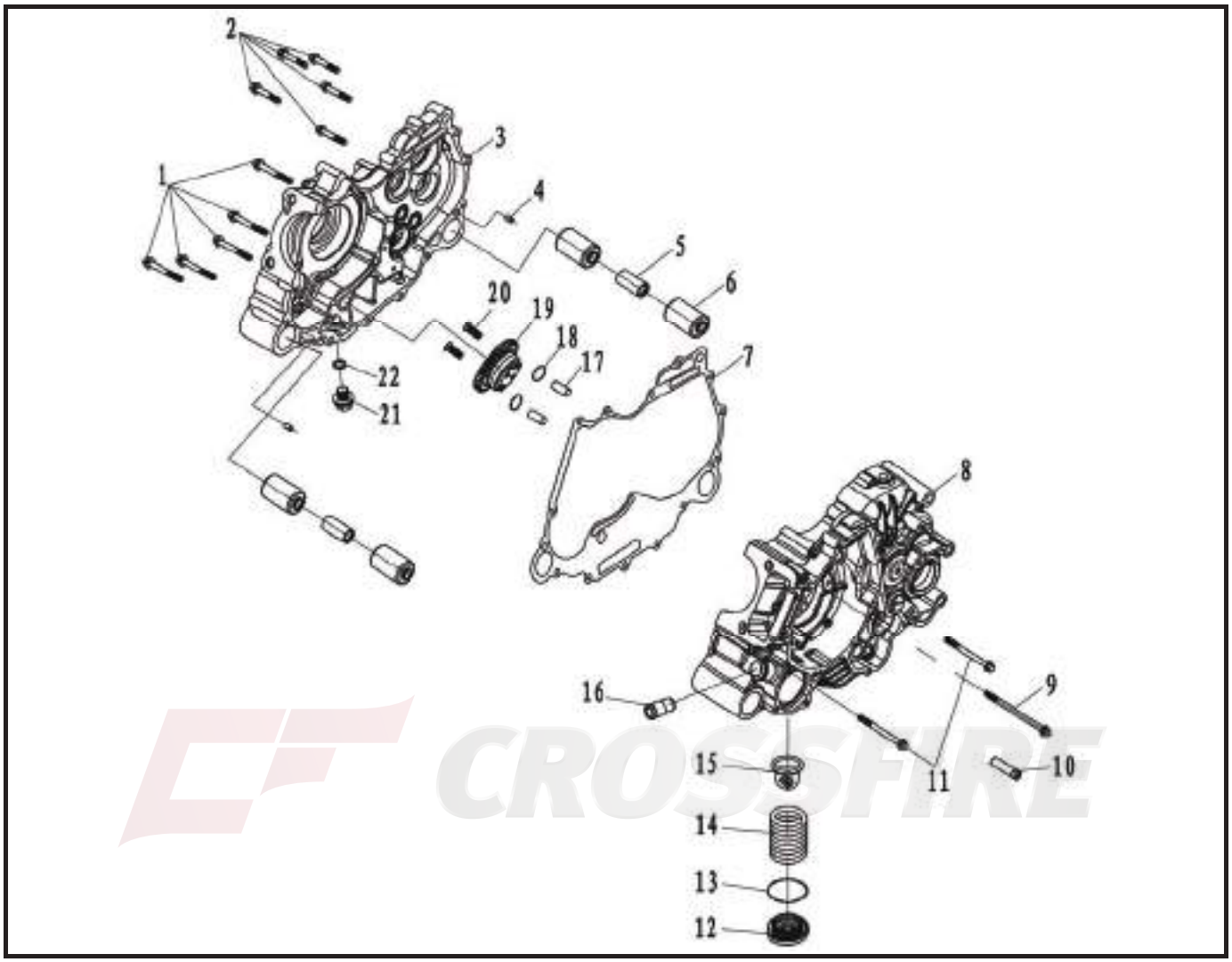

No.	Part Name	Qty	Remarks
	Removing the crankcase and oil pump		Re move the parts in the order listed.
	Crankcase separation		
1	Flange bolt M6×55	5	
2	Flange bolt M6×355	5	
3	Right crankcase comp	1	
4	Dowel pin Φ8×12	2	
5	Washer Φ10.5×Φ19×38	2	
6	Damping bush	4	
7	Crankcase gasket	1	
8	Left crankcase comp	1	
9	Flange bolt M6×100	1	
10	Transmission exhaust nozzle	1	
11	Flange bolt M6×70	2	

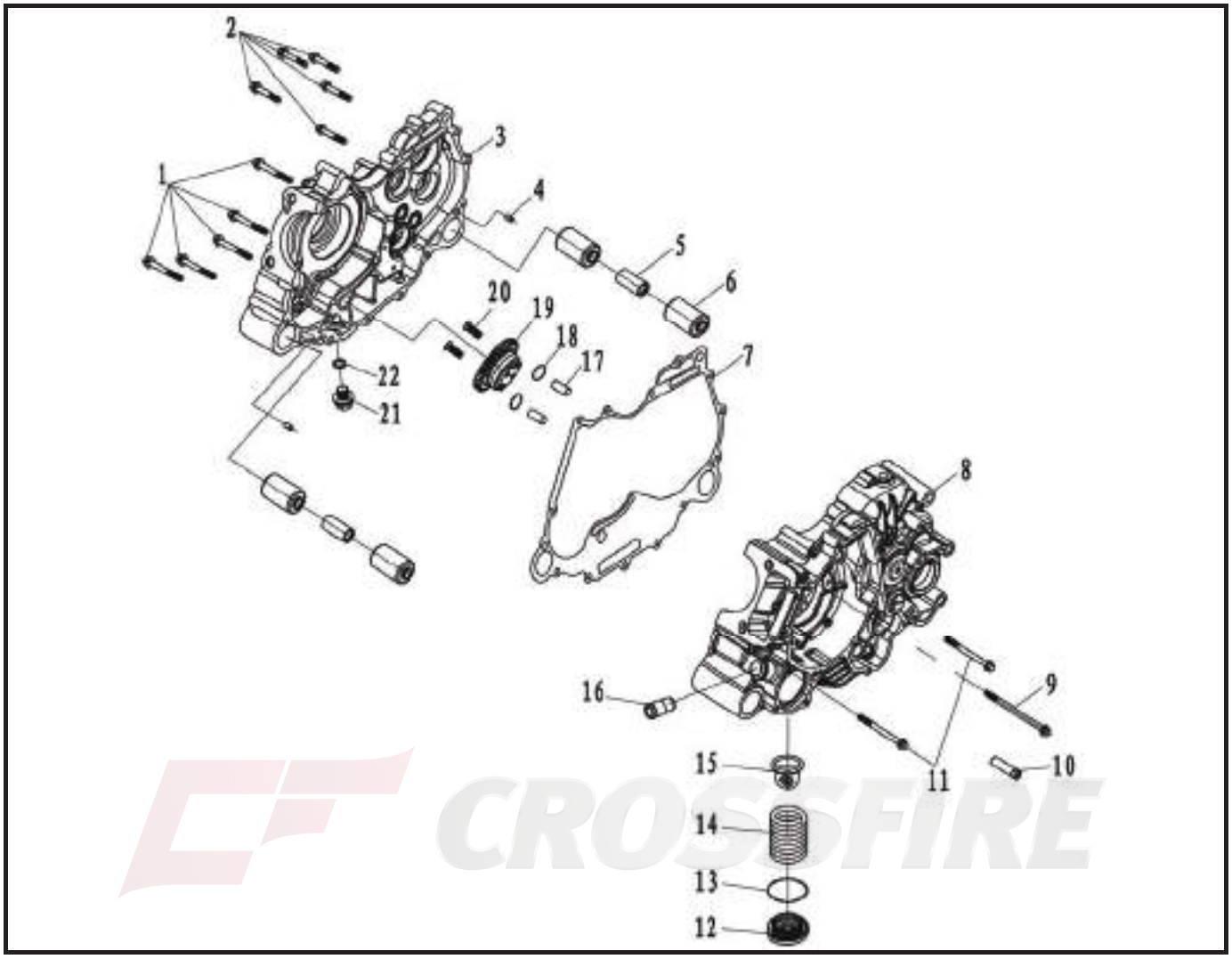

No.	Part Name	Qty	Remarks
12	Oil drain screw	1	
13	O-ring 36×3.5	1	
14	Mesh spring	1	
15	Oil strainer	1	
16	Water pipe connector Φ18	1	
17	Locating pin 8×12	2	
18	O-ring 9×2	2	
19	Oil pump comp	1	
20	Cross recessed countersunk head screw M6×30	2	
21	Bolt M14×1.5×16	1	
22	Aluminum gasket 14×22×1	1	
			For assembly, reverse the disassembly procedure.

BALANCE SHAFT

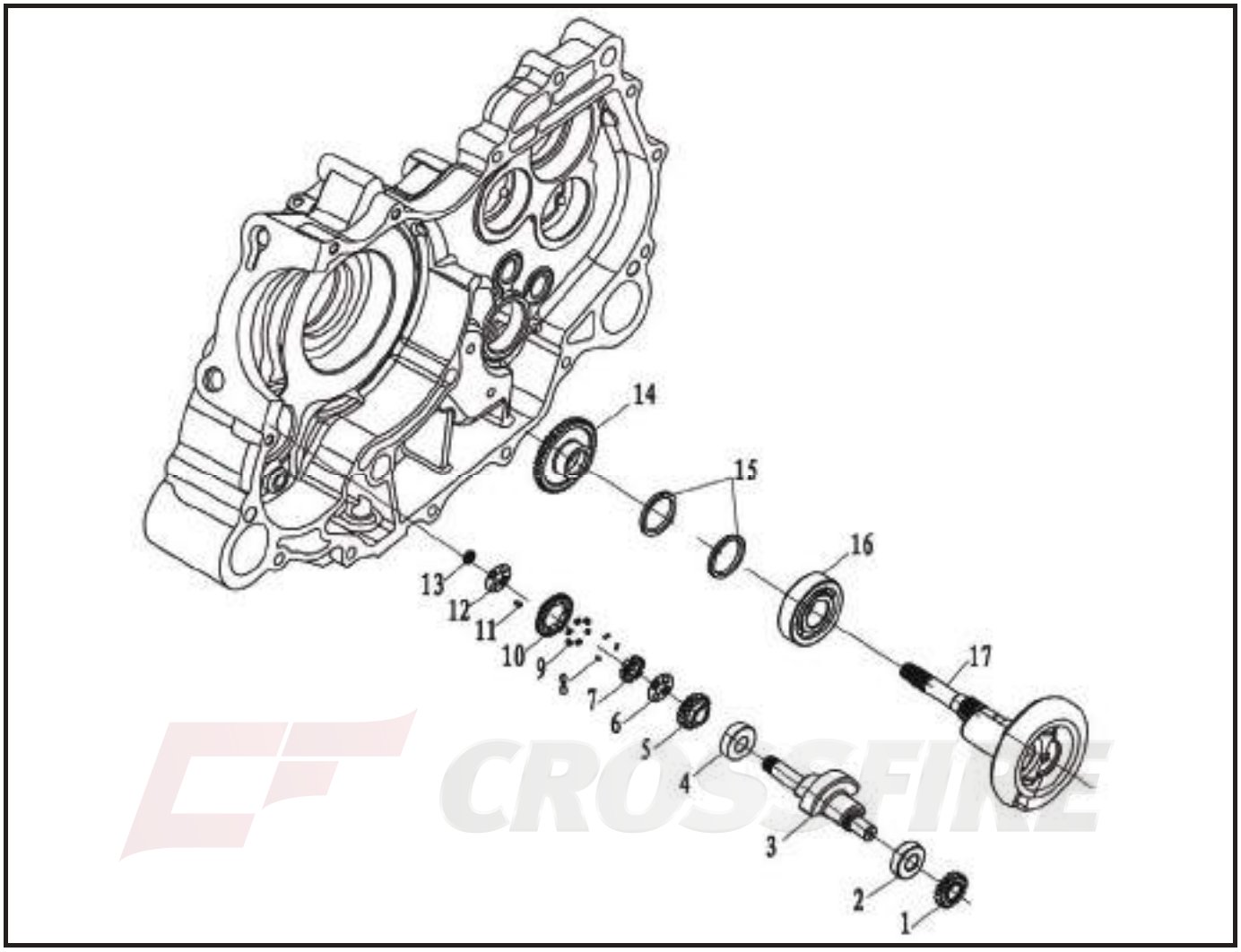

No.	Part Name	Qty	Remarks
	Removing the balance shaft		Re move the parts in the order listed.
1	Driving gear pump	1	
2	Bearing 6004	2	
3	Balance shaft	1	
4	Oil pump driving tooth	1	
5	Balance of tooth holder Ⅰ	1	
6	Balance driven gear base	1	
7	Pin Φ4.5×9.4	3	
8	Buffer spring	6	
9	Balance driven ring	1	
10	Flat key B5×8	1	
11	Balance of tooth holder Ⅱ	1	

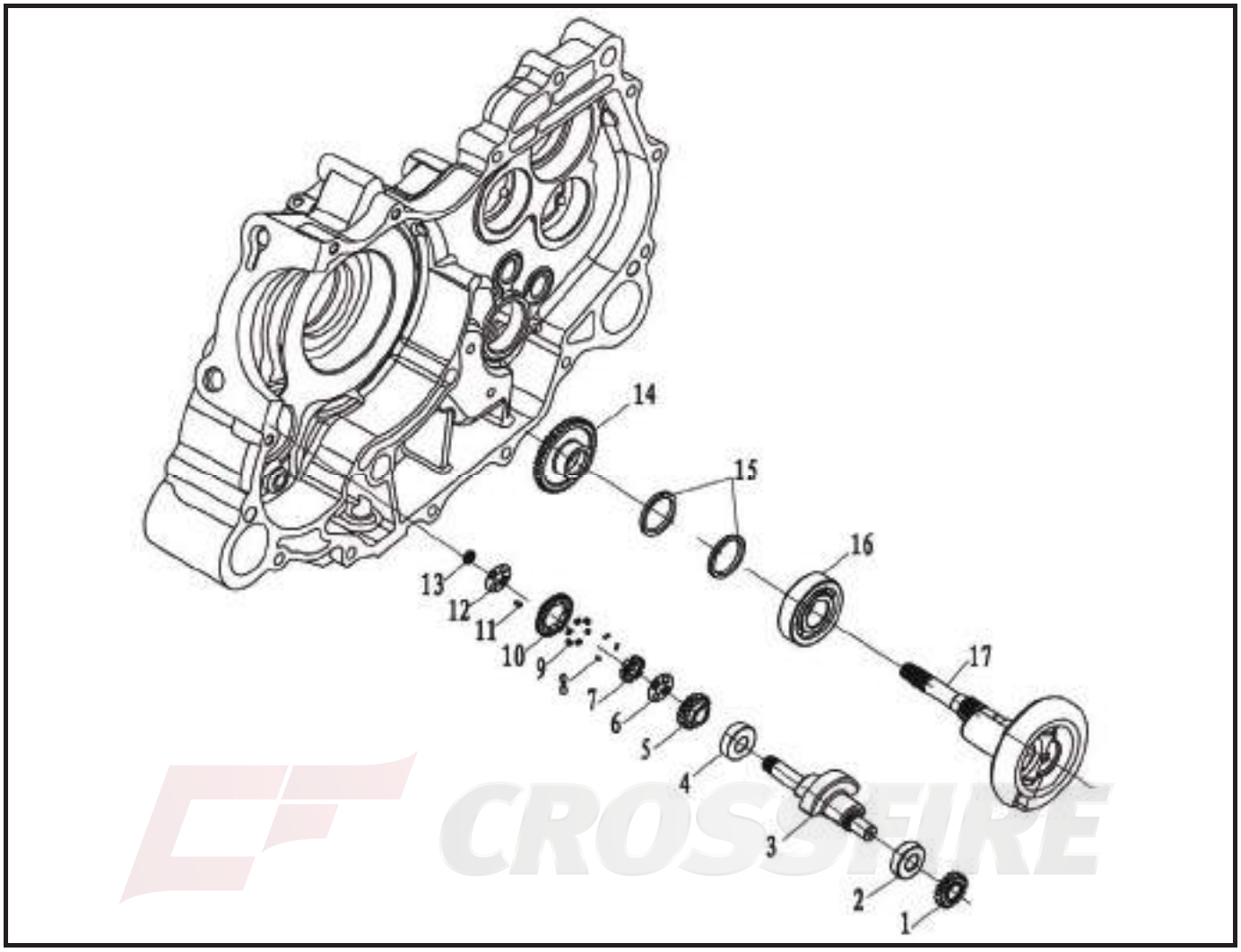

No.	Part Name	Qty	Remarks
12	Balance driven gear	1	
13	Nut 14×1	1	
14	Balanced initiative gear	1	
15	Oil seal 35×44×4	2	
16	Balance the driving gear	1	
17	balance shaft	1	
			For assembly, reverse the disassembly procedure.

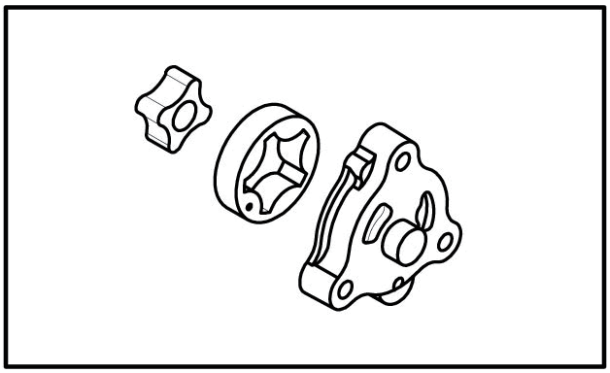

1、CHECK

1). Checking the oil pump

- rotor housing
- rotor cover

  Cracks/wear/damage → Replace.
- oil pump operation

  Unsmooth → Repeat steps #1 and #2 or replace the defective parts.

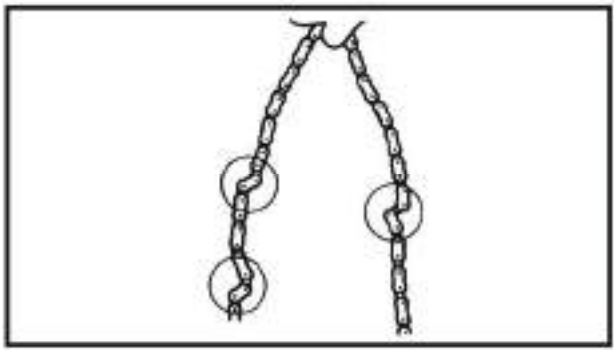

2) Checking the timing chain and guides

- timing chain

  Cracks/stiff → Replace the timing chain and camshaft sprocket as a set.
- timing chain guides

  Wear/damage → Replace.

2、MEASURE

1). Measure the oil pump

- tip clearance(a) (between the inner rotor ① and the out rotor ②)
- side clearance(b)(between the outer rotor ② and the pump housing ③)
- body clearance (c) (between the outer rotor ② and the pump housing ③)

  Out of specification → Replace the oil pump.

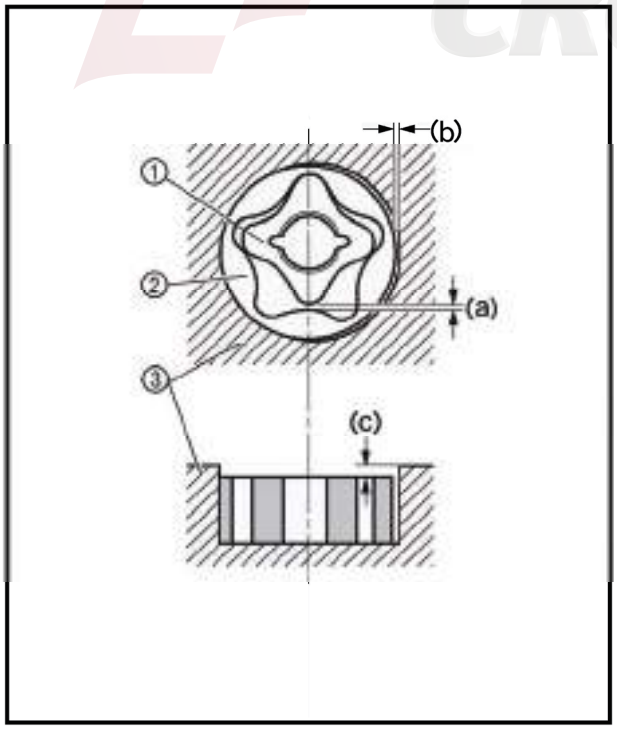

Tip clearance Limit: 0.23 mm
Side clearance Limit: 0.25 mm
Body clearance Limit: 0.20 mm

3、INSTALL

1). Assembling the oil pump

- inner rotor
- outer rotor
- oil pump shaft (with the recommended lubricant)

CROSSFIRE

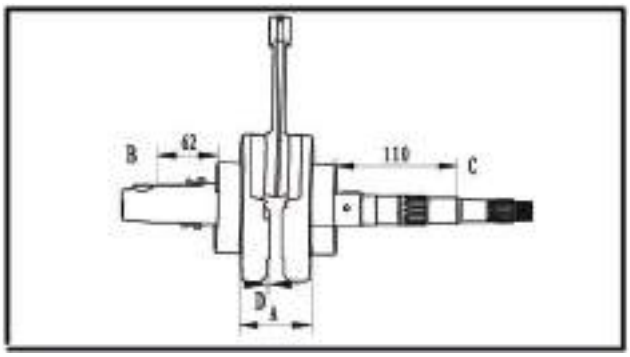

1、MEASURE

1). Measure the crankshaft

• crank width (A)

Out of specification → Replace the crankshaft.

Crank width
54.95~ 55 mm（2.1634~2.1654 in）

• side clearance (D)

Out of specification → Replace the crankshaft

Big end side clearance Limit:
0.15 mm (0.0059 in)

• runout (b)(C)

Out of specification → Replace the crankshaft.

Runout limit
(b): 0.03 mm （0.0012 in）
(C): 0.03 mm （0.0012 in）

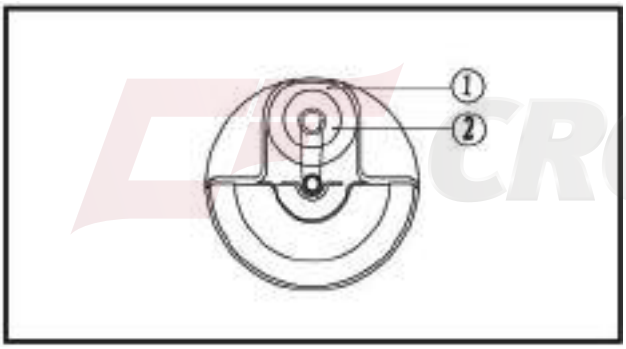

The crankshaft ① and the crank pin ② oil passages must be properly interconnected with a tolerance of less than 1 mm (0.04 in).

CAUTION:

The buffer boss and woodruff key should be replaced when removed from the crankshaft.

2). Assembling the crankcase

(1) Apply:

• sealant (Quick Gasket)

(to the mating surfaces of both case halves)

(2) Install:

• dowel pins

(3) Fit the left crankcase onto the right case. Tap lightly on the case with a soft hammer

CAUTION:

Before installing and torque the crankcase holding bolts, be sure to check whether the transmission is functioning properly by manually rotating the shift drum in both directions.

CROSSFIRE

(4)Tighten:

• crankcase bolts

(follow per tightening sequence)

NOTE:

Tighten the bolts in stages, using a crises cross pattern.

3、INSTALL

1). Installing the crankshaft

• crankshaft

NOTE:

Hold the connecting rod at the Top Dead Center (TDC) with one hand while turning the nut of the installing tool with the other. Operate the installing tool until the crankshaft bottoms against the bearing.

CROSSFIRE

SHIFT AND CONTROL MECHANISM

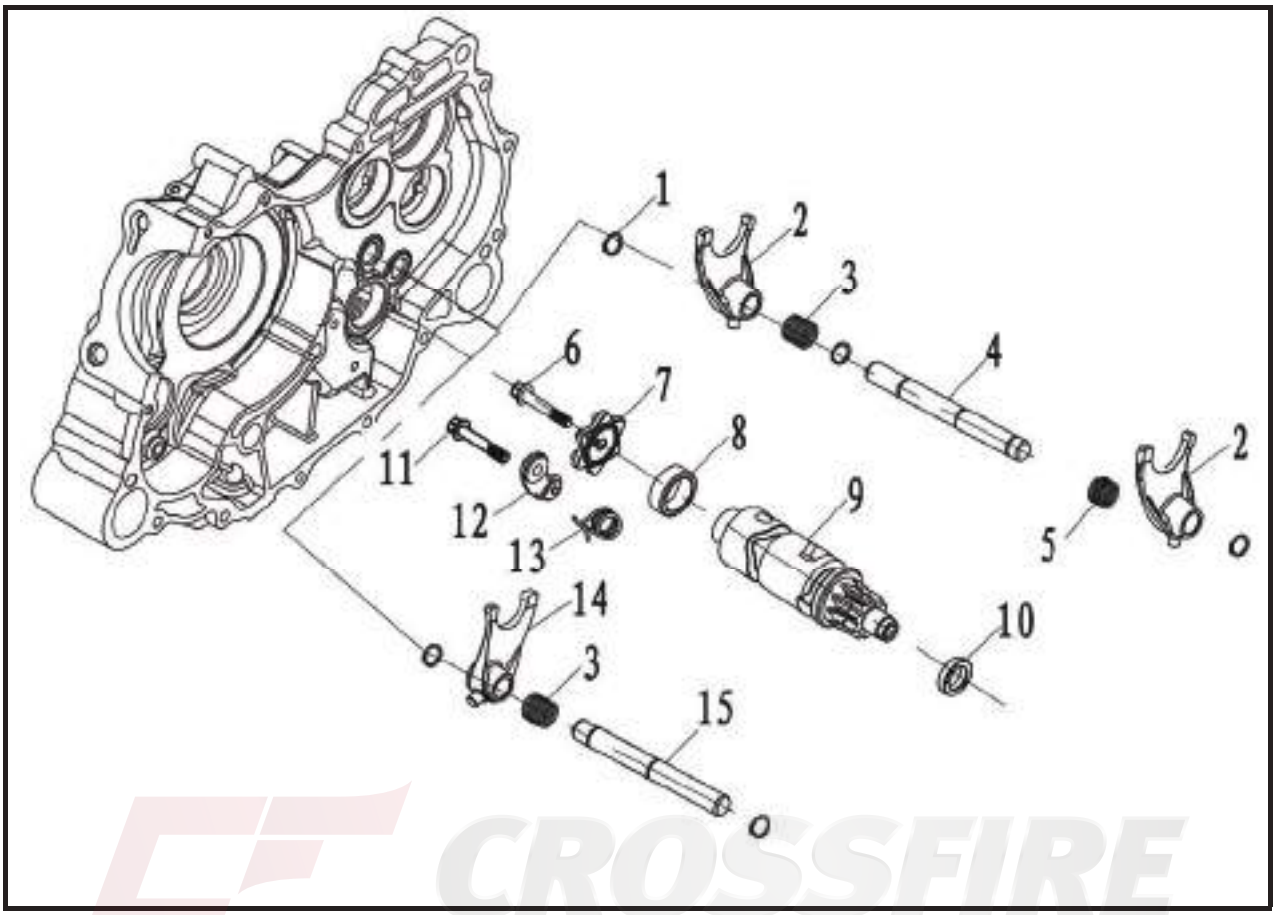

No.	Part Name	Qty	Remarks
	Removing the shifting fork and Variable speed drum		Remove the parts in the order liste
	Gear case separation		
1	Cir clip Φ12	5	
2	Shifting fork	2	
3	HR gear dpring	2	
4	Shifting yoke Ⅱ	1	
5	L gear spring	1	
6	Flange bolt M6×25	1	
7	Gate shift	1	
8	Needle bearing	1	
9	Variable speed drum	1	
10	Oil seal 14×22×5	1	

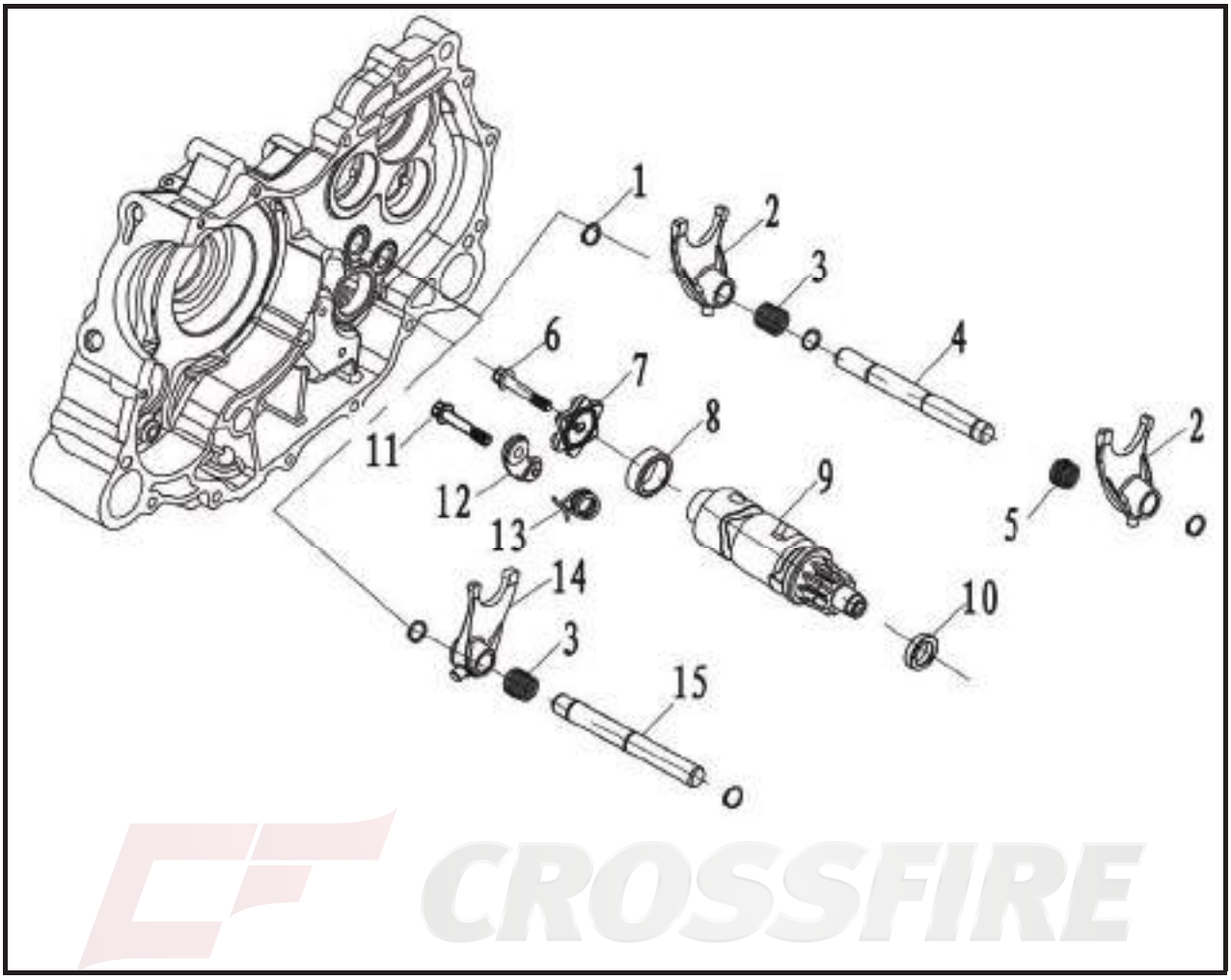

No.	Part Name	Qty	Remarks
11	Flange bolt M6×20	1	
12	Shift reset board	1	
13	Reset spring	1	
14	Shifting fork Ⅱ	1	
15	Shifting yoke I	1	
			For assembly, reverse the disassembly procedure.

GEARCASE TRANSMISSION

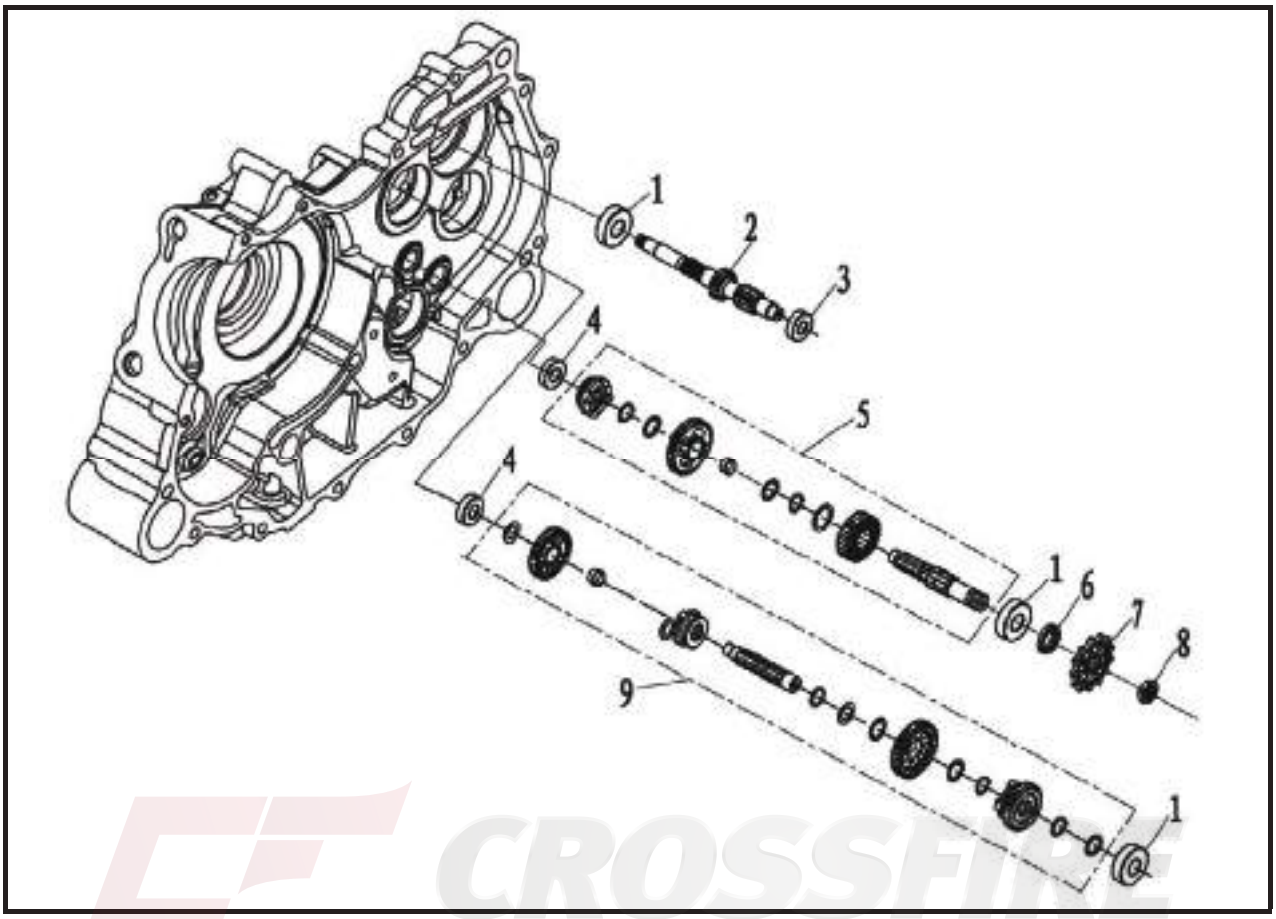

No.	Part Name	Qty	Remarks
	Removing the gear case transmission		Remove the parts in the order listed.
	Gear case separation		
1	Bearing 6204	3	
2	Main shaft	1	
3	Bearing 6202	1	
4	Bearing 6202Z	2	
5	Output shaft	1	
6	Oil seal 20×34×7	1	
7	Drive sprocket	1	
8	Nut 14×1	1	
9	Auxiliary shaft	1	
			For assembly, reverse the disassembly procedure.

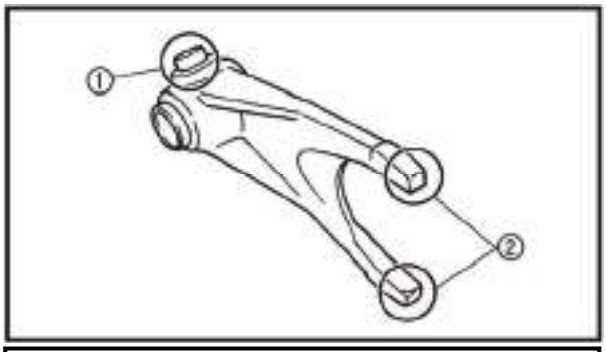

1、CHECK

1). Checking the shift forks

- shift fork follower ①
- shift fork pawl ②

  Scoring/bends/wear/damage → Replace.
- guide bar

  Roll the guide bar on a flat surface.

  Bends → Replace.

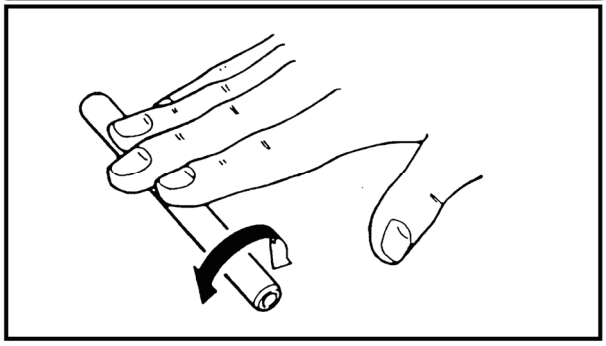

WARNING：

Do not attempt to straighten a bent guide bar.

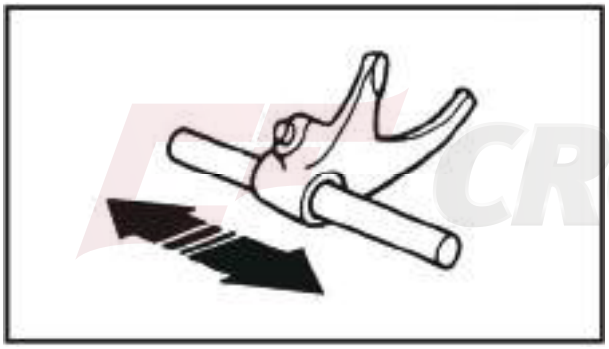

- shift fork movement

  (on the guide bar)

  Unsmooth operation → Replace the shift fork and the guide bar.

CROSSFIRE

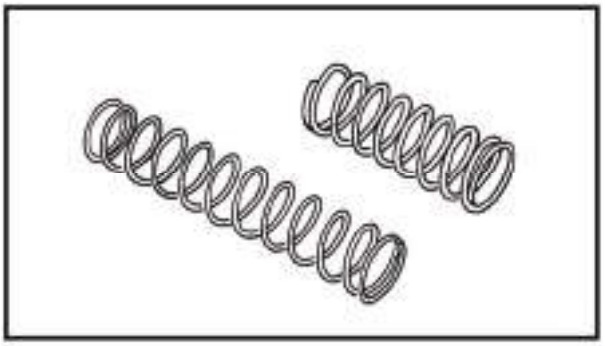

- springs

  Cracks/damage → Replace.

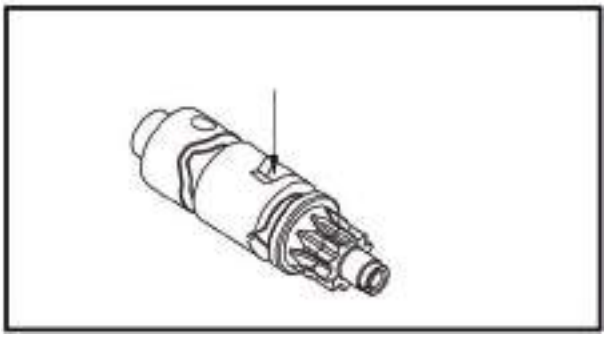

2). Checking the shift drum

- shift drum grooves

  Scratches/wear/damage → Replace.

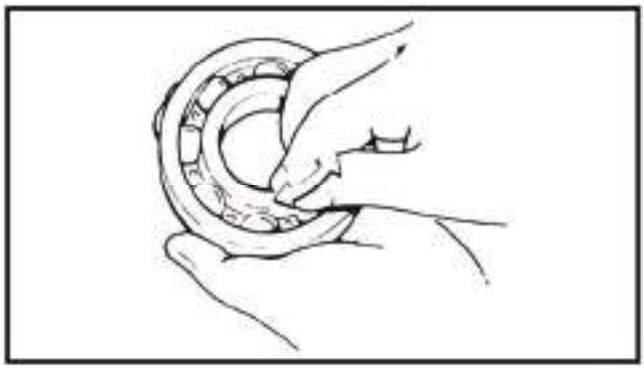

3). Checking the bearings

(1) Check:

- bearings

  Clean and lubricate, then rotate the inner race with a finger.

Roughness → Replace

4). Checking the oil pump

- rotor housing
- rotor cover

  Cracks/wear/damage → Replace.

- oil pump operation

  Unsmooth → Repeat steps #1 and #2 or replace the defective parts.

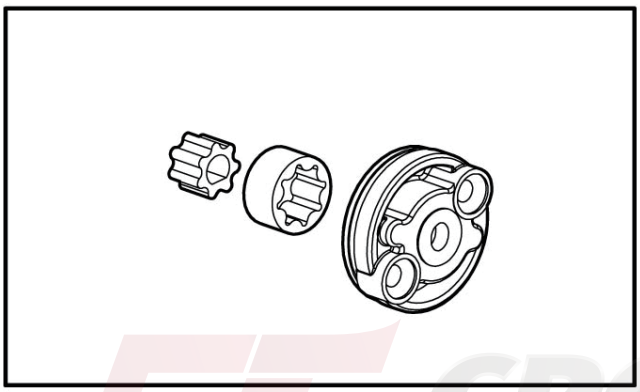

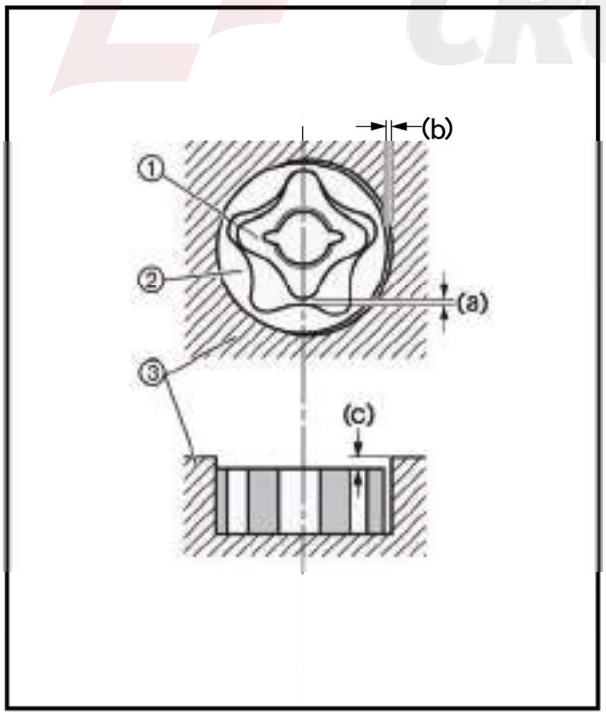

2、Measure:

1). Measure the oil pump

- tip clearance(a)

  (between the inner rotor ① and the out rotor ②)

- side clearance(b)

  (between the outer rotor ② and the pump housing ③)

- body clearance (c)

  (between the outer rotor ② and the pump housing ③)

  Out of specification → Replace the oil pump.

Tip clearance Limit: 0.23 mm
Side clearance Limit: 0.25 mm
Body clearance Limit: 0.20 mm

CROSSFIRE

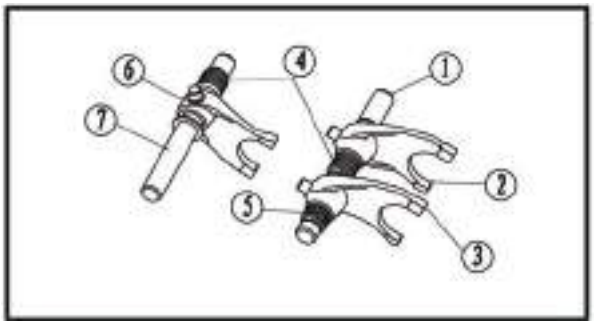

3、INSTALL

1). Assembling the shift fork

- shifting yoke Ⅱ①
- H shifting fork ②
- L shifting fork ③
- HR gear dpring ④
- L gear spring ⑤
- R shifting fork ⑥
- shifting fork I ⑦

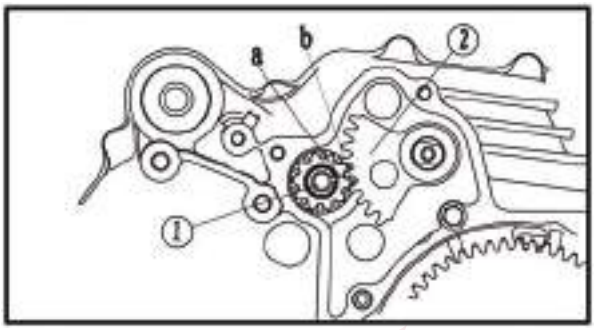

2). Installing the shift levers

- Variable speed drum ①
- Shift arm components ②

NOTE:

When installing the shift lever 1, align the punch mark (a) on the shift lever 1 with the punch marks (b) on the shift lever 2.

CROSSFIRE

3). Assembling the oil pump

- inner rotor
- outer rotor
- oil pump shaft

(with the recommended lubricant)

MALFUNCTION INSPECTION

Appearance malfunction inspection

No.	Phenomenon	Measure
1	Plastic cover damaged	1. Replace new plastic cover.
		2. Check whether installation supporter deformed, repairing or re-painting is needed before replacing new plastic cover.
		3. Re-paste decals and re-rivet warning labels.
2	Bumper damaged	1. Replace new bumper.
		2. Check whether installation supporter deformed or damaged, repairing or re-painting is needed before replacing new bumper.
3	Frame toe-board damaged	1. Replace new frame toe-board.
		2. Check plastic cover whether deformed or damaged, repairing deformed or damaged plastic cover.
4	Warning labels	Replace damaged and vague warning labels

Brake system malfunction inspection

No.	Phenomenon	Measure
1	Locked braking system	1. Check whether brake disc plates deformed.
		2. Check whether hydraulic cylinder of brake clamp locked or brake clamp assembly parts deformed.
2	Brake performance degressive	1. Check whether disc plates abrasion exceeded limits.
		2. Check whether brake shoe of clamp abrasion exceeded limits or polluted by friction material such as oil.
		3、Check whether the oil cup of brake fluid lack oil.
3	Grinding noises emerged from front brake or brake plate become red during drive due to superheat.	1. Check whether brake plate deformed.
		2. Check whether hydraulic cylinder of brake clamp locked or brake clamp assembly parts deformed.
4	Grinding noises emerged from rear brake or brake plate become red during drive	1. Check whether brake plate deformed.
		2. Check whether hydraulic cylinder of brake clamp locked or brake clamp assembly parts deformed.
		3. Check whether rear brake clamp parking institution running flexible or return accurately.
5	Off tracking by braking at high-speed	1. Check whether front brake power deviation from left and right is within specified scope.
		2. Check whether front brake power degressive caused to rear wheel locked before front wheel in brake process.
		3. Check whether left and right absorber spring force deviation is exceeded specified value.
		4. Check whether front wheel and front wheel axle nut loosen or damaged.

5	Off tracking by braking at high-speed	5. Check whether front wheel hub inner spline and front wheel axle outer spline worn or loosen.
		6. Check whether rubber cushion connected to front suspension rocker and frame damaged.

Other system malfunction inspection

No.	Phenomenon	Measure
1	Steering wheel loosen, shift up and down	1. Check whether steering wheel clip loosen or damaged.
		2. Check whether steering column clip and clip seat loosen or damaged.
2	Front wheel steering clearance excessive	1. Check whether tie-rod and steering column locknut loosen or damaged, or steering knuckle and steering column locknut loosen or damaged.
		2. Check whether tie-rod two ball joint damaged.
3	Front wheel sway during drive	1. Check whether steering knuckle bearing damaged.
		2. Check whether king pin ball joint damaged.
		3. Check whether front wheel and axle locknut loosen or damaged.
		4. Check whether front wheel hub inner spline and front wheel axle outer spline worn or loosen.
		5. Check whether rubber cushion connected to front suspension rocker and frame damaged.
4	Rear wheel sway during drive	1. Check whether rear axle bearing damaged.
		2. Check whether rear wheel and axle locknut loosen or damaged.
		3. Check whether rear wheel hub inner spline and rear wheel axle outer spline worn or loosen.
		4. Check whether rubber cushion connected to rear suspension rocker and frame damaged.
5	Wheel hop during drive	1. Check whether wheel rim deformed.
		2. Check whether front and rear axles bent.
		3. Check whether tyre aging and deformed.
6	Absorber become soft and comfortability depressed	1. Check whether over loading.
		2. Check whether absorber spring become soft.
		3. Check whether absorber lost of damping force incompression and prolongation.

CROSSFIRE

PANEL AND CARGO BED

Front Panel

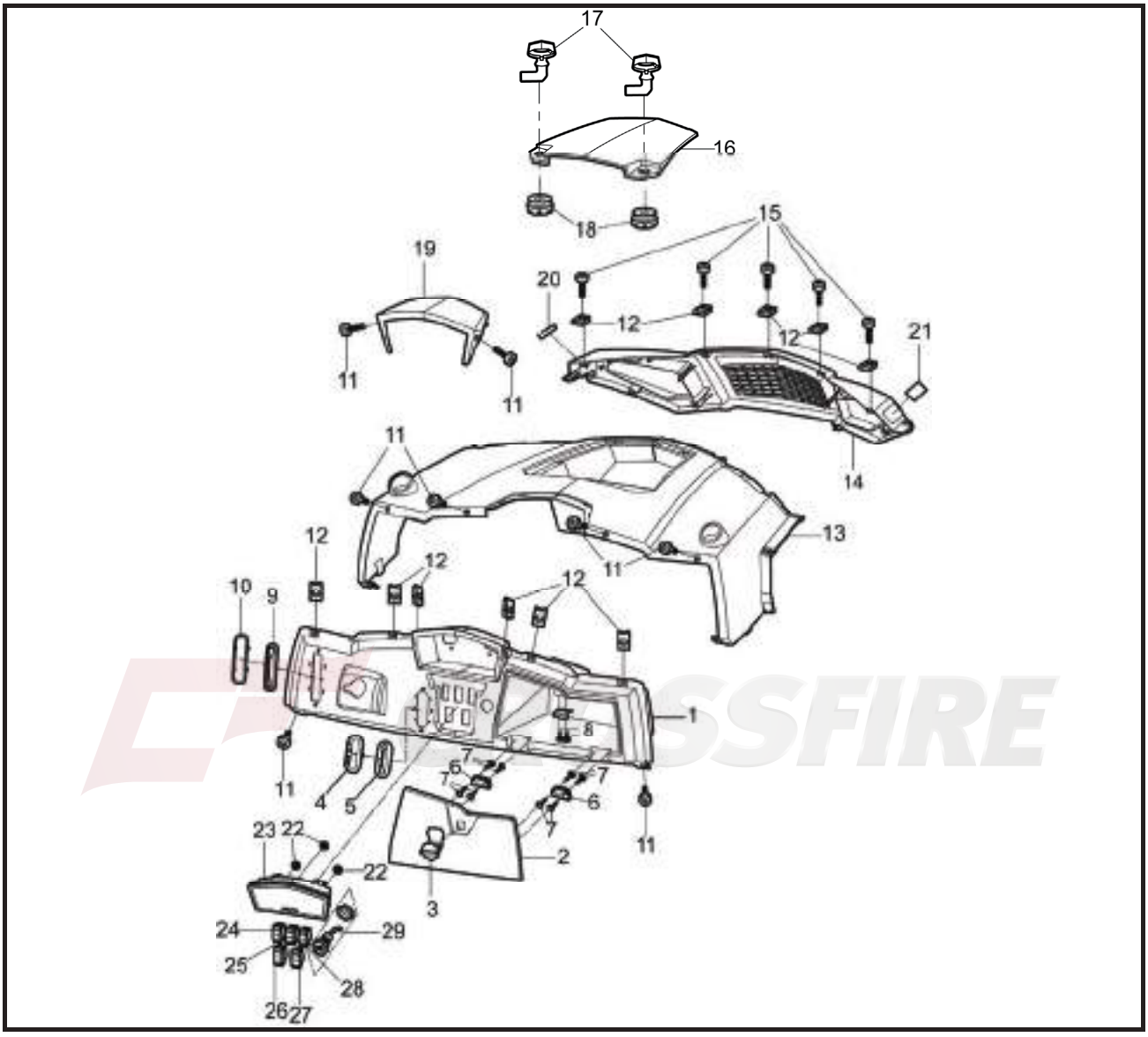

No.	Part Name	Qty	Remarks
	Removing the front panel		
1	Instrument mounting plate	1	
2	Sundry box cover	1	
3	File box lock com.	1	
4	Transmission decorative cover	1	
5	Transmission dust cover	1	
6	Hinge	2	
7	Parking handle dust coverr	1	
8	Cross small plate head screw M5×16	8	
9	Front side light bar(L)	2	
10	Parking decorative cover	1	

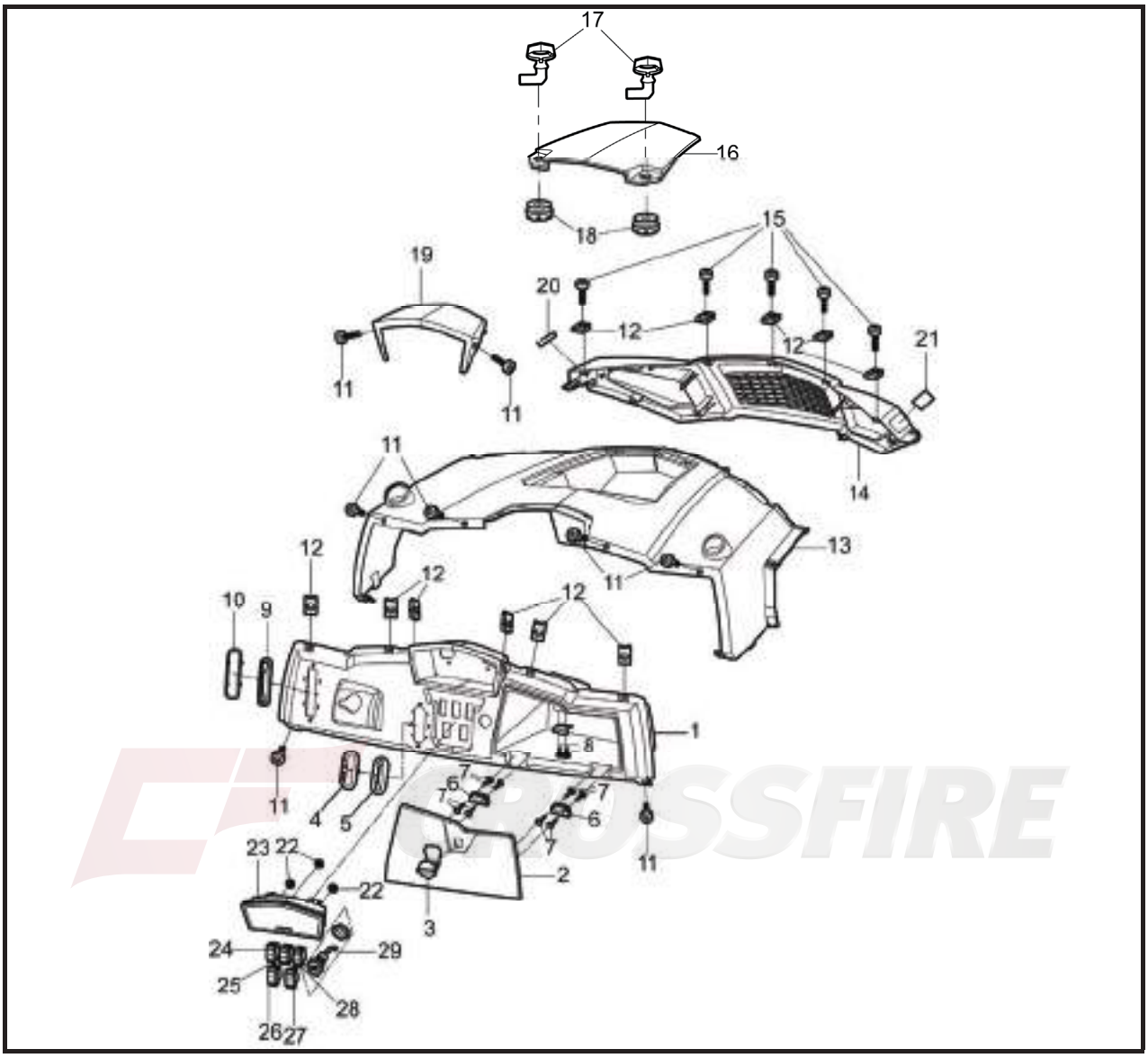

No.	Part Name	Qty	Remarks
11	Socket hexagon flat head screws M6×12	6	
12	Thread Clip M6×2	23	
13	Front body cover	1	
14	Headlight mounting cup	1	
15	Socket hexagon flat head screws M6×16	5	
16	Front body cover	1	
17	Front body cover knob	2	
18	Florist type rubber ring	2	
19	Instrument plate	1	
20	Front side light bar(L)	1	
21	Front side light bar(R)	1	
22	Hexagon flange nut M6	1	

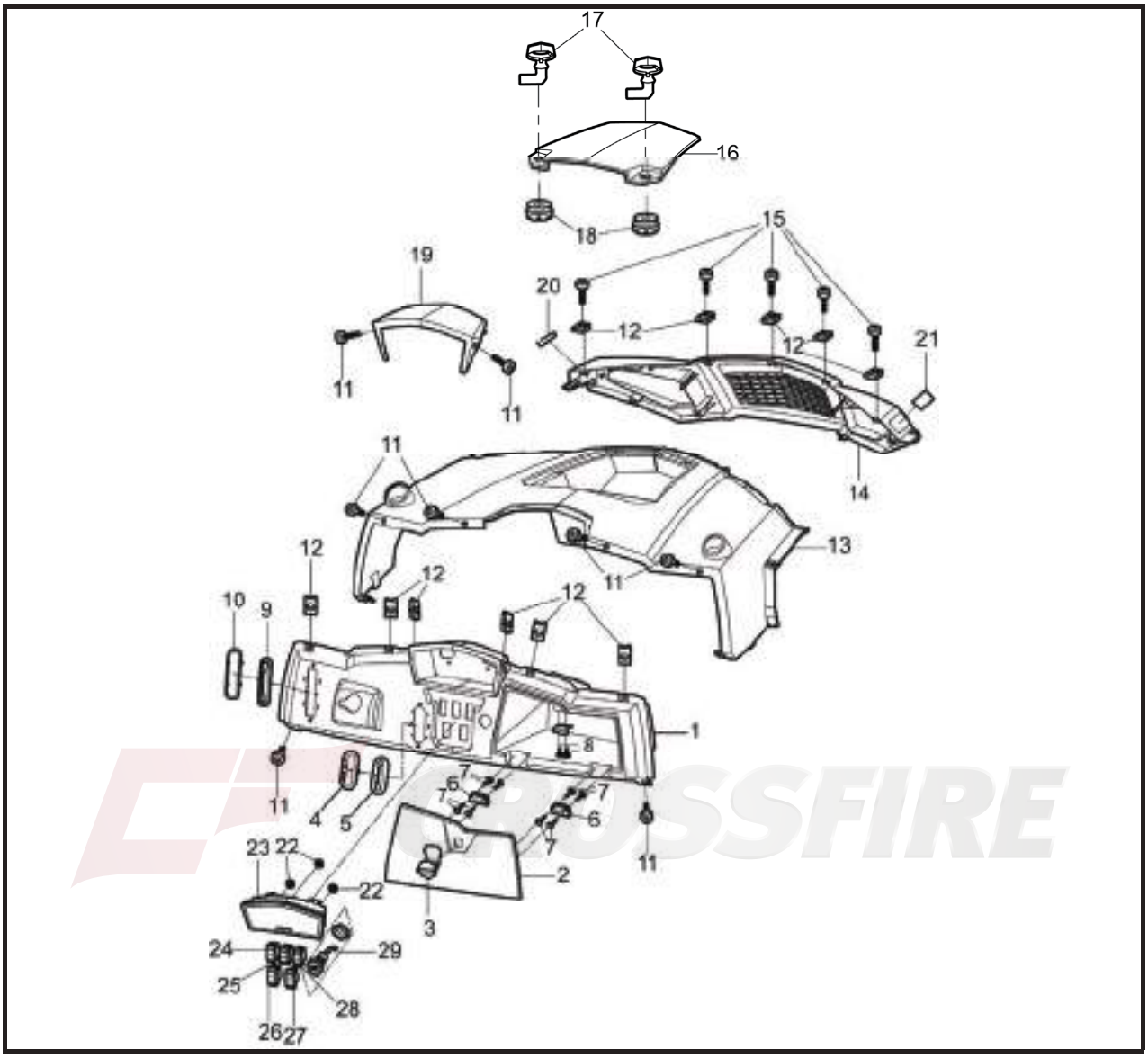

No.	Part Name	Qty	Remarks
23	Meter assy	1	
24	Light switch assy	1	
25	Far/near light transfer switch	1	
26	Turn signal switch	1	
27	Windlass controlling switch	1	
28	Emergency light switch	1	
29	DC outlet com.	1	

Side Cover Parts

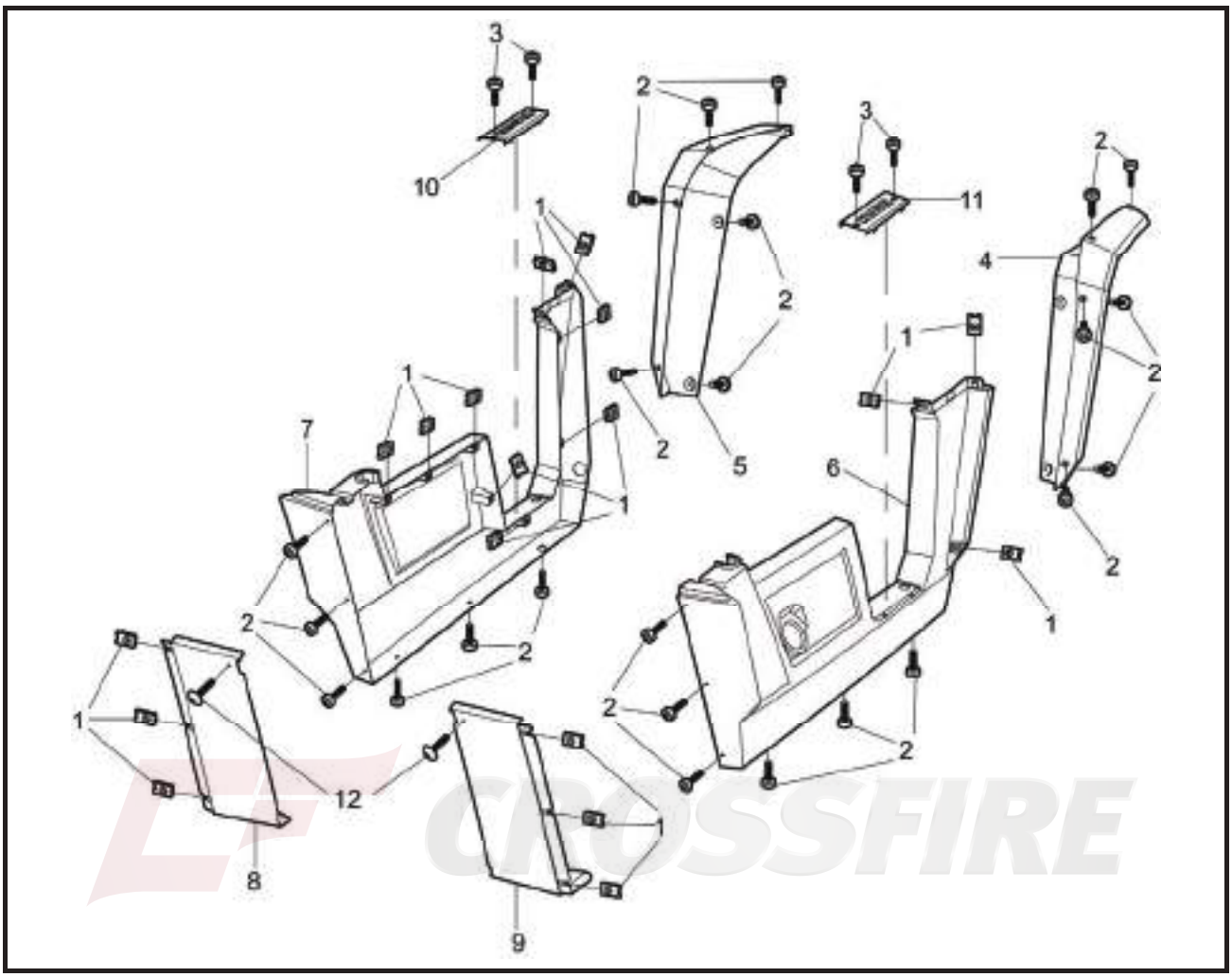

No.	Part Name	Qty	Remarks
	Removing the side cover		
1	Thread clip M6×2	24	
2	Socket hexagon flat head screws M6×16	24	
3	Socket hexagon flat head screws M6×20	4	
4	Front body cover right bar	1	
5	Front body cover left bar	1	
6	Right side protective plate	1	
7	Left side protective plate	1	
8	Rear body left protective cover	1	
9	Rear body right protective cover	1	
10	Sideguard decorative plate(L)	1	
11	Sideguard decorative plate(R)	1	
12	Hexagon socket head bolt M6×16	1	

Cargo Bed

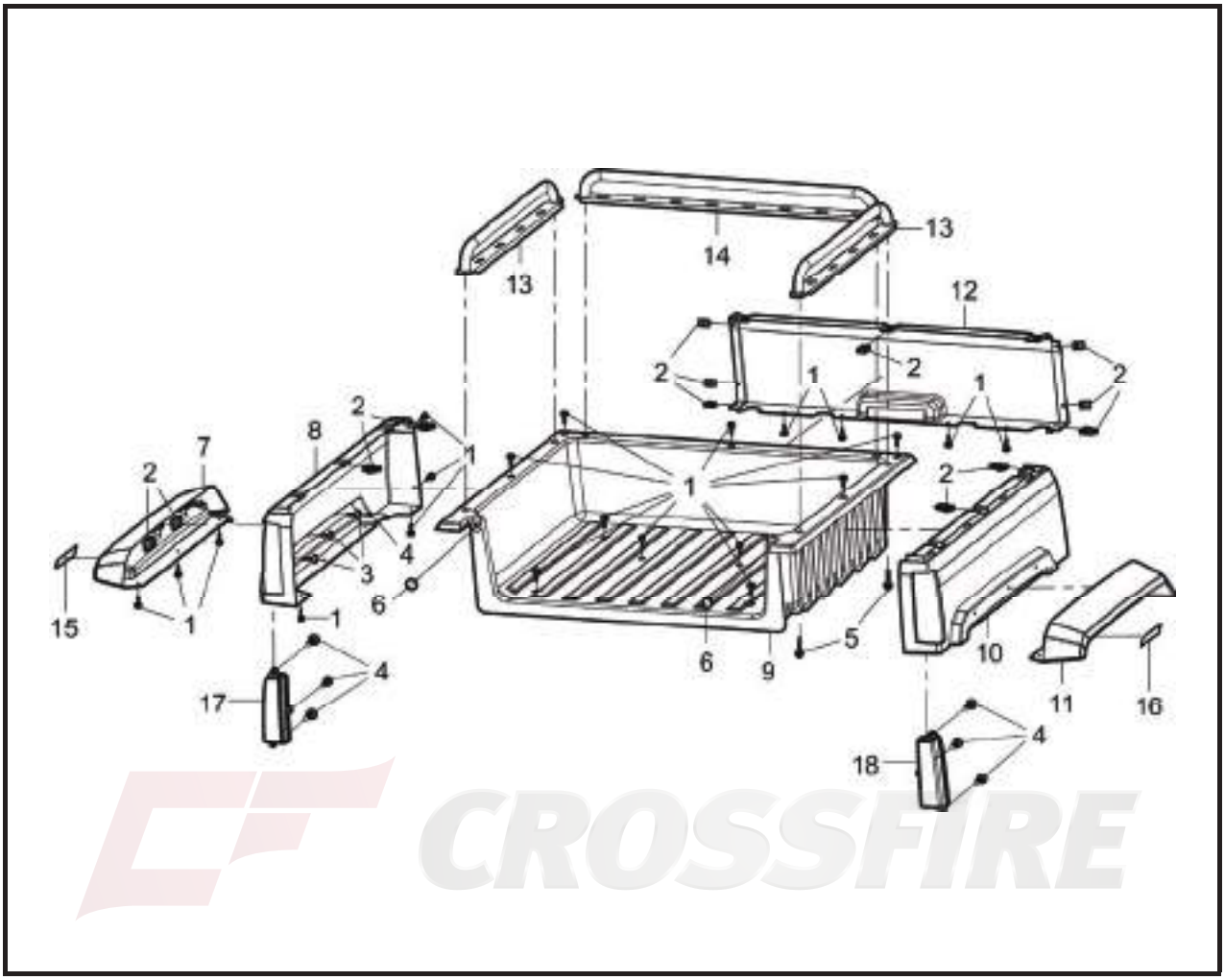

No.	Part Name	Qty	Remarks
	Removing the side cover parts		
1	Socket hexagon screw M6×16	29	
2	Thread clip M6×2	17	
3	Hexagon socket head bolt M6×16	6	
4	Cross plate head screw M5×16	2	
5	Flange bolt M6×25	4	
6	Shock absorbtion rubber Φ22×4	2	
7	Cargo left side bar	1	
8	Cargo left side plate	1	
9	Cargo body	1	
10	Cargo right side plate	1	
11	Cargo right side bar	1	
12	Cargo front panel	1	

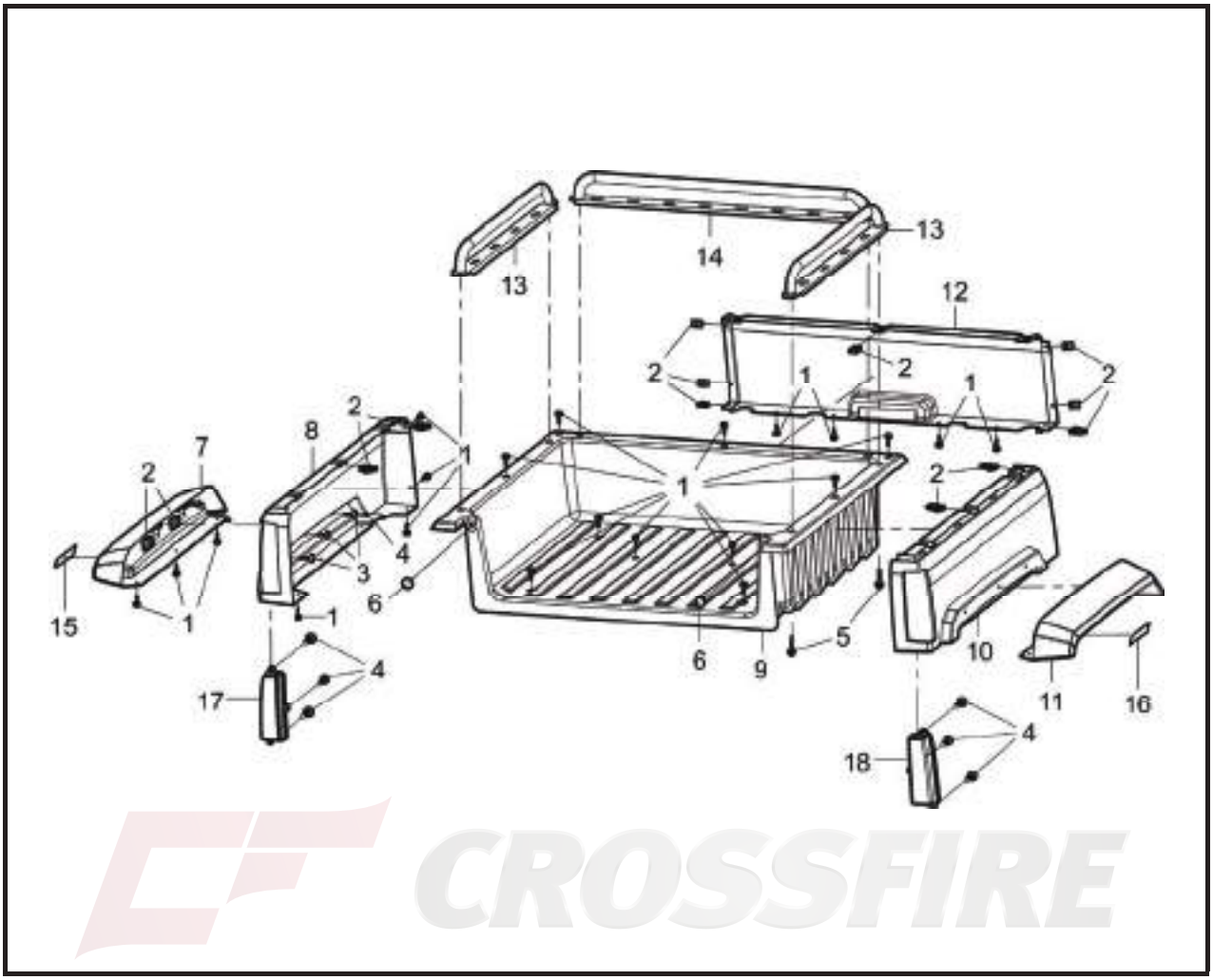

No.	Part Name	Qty	Remarks
13	Cargo side fence comb.	2	
14	Cargo front fence comb.	1	
15	Rear side light bar(L)	1	
16	Rear side light bar(R)	1	
17	Tail lamp comb.(L)	1	
18	Tail lamp comb.(R)	1	

Cargo Bed Door

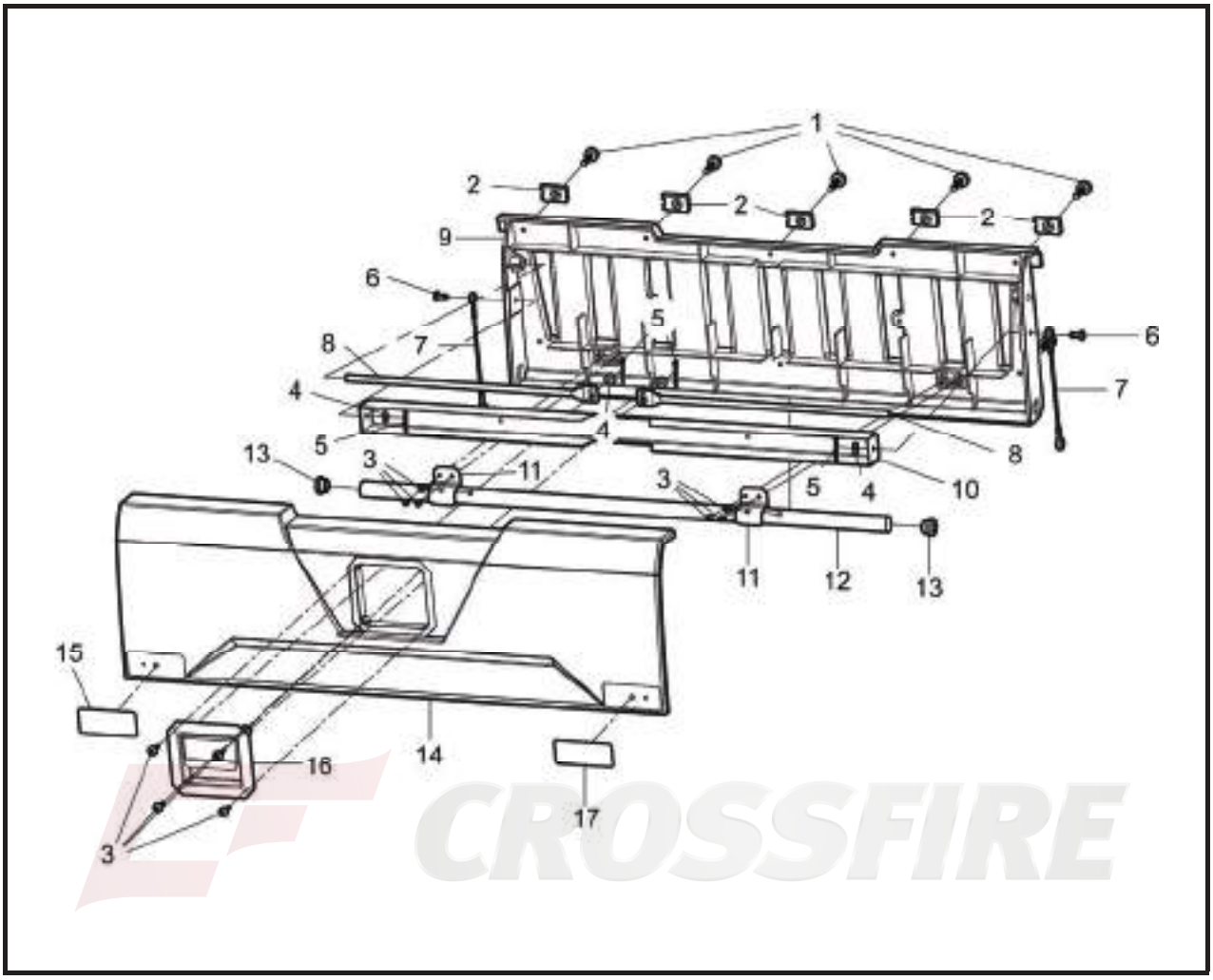

No.	Part Name	Qty	Remarks
	Removing the cargo bed door		
1	Socket hexagon flat head screws M6×16	10	
2	Thread clip M6×2	8	
3	Cross small plate head screw ST4.2×13	4	
4	Washer Φ6×Φ12×1.6	2	
5	Collar pin	2	
6	Cable hook pin I	2	
7	Cargo door cable comb.	2	
8	Cargo door switch axis	2	
9	Cargo door lining plate	1	
10	Cargo door support plate	1	
11	Rotate liner plate	2	
12	Rotate liner	1	

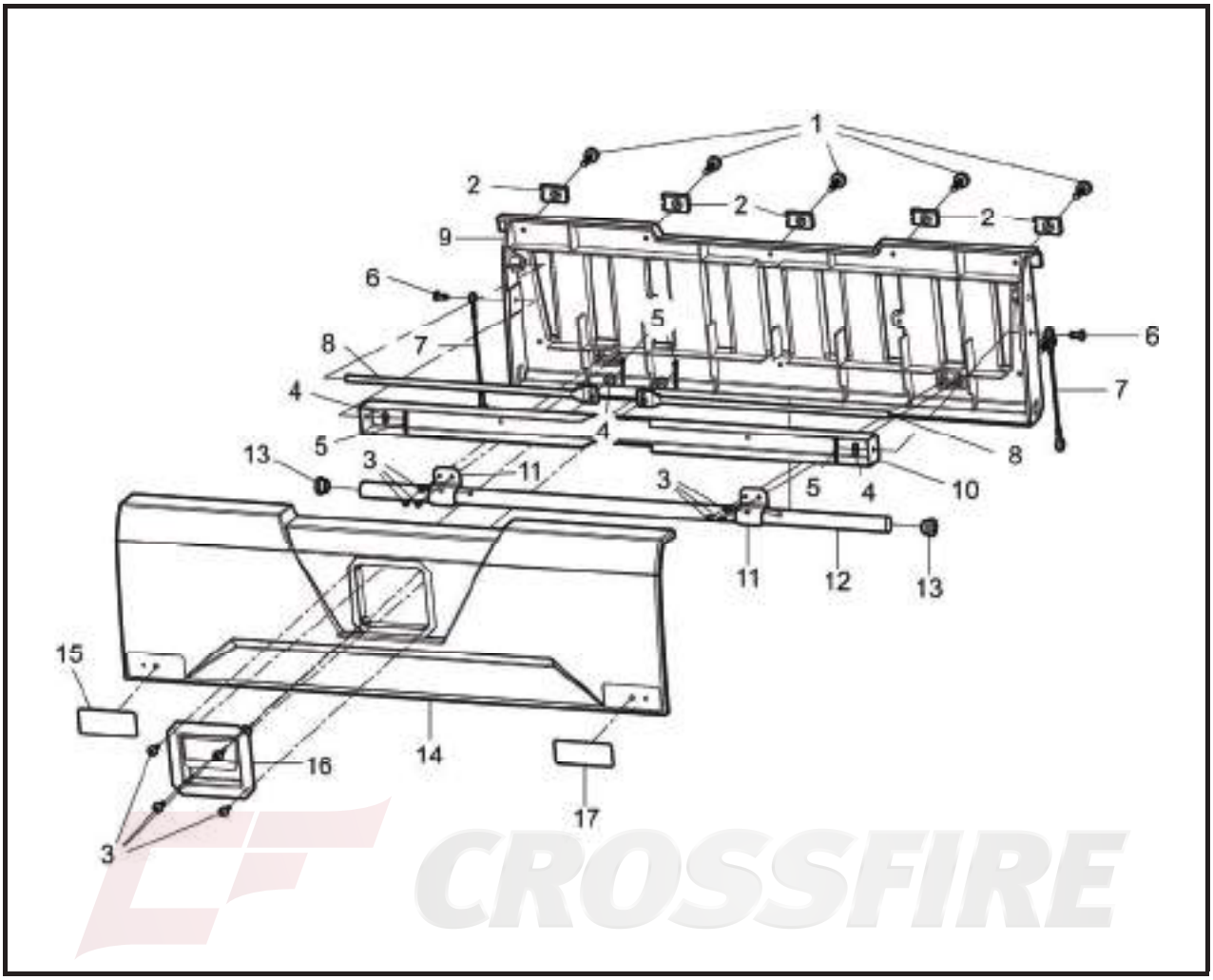

No.	Part Name	Qty	Remarks
13	Nylon flanging bushing Φ10.2×Φ17.8×Φ22.5×13	2	
14	Cargo door trim panel	1	
15	Rear reflector comb.	1	
16	Rear panel switch comb.	1	

Head Shed Frame

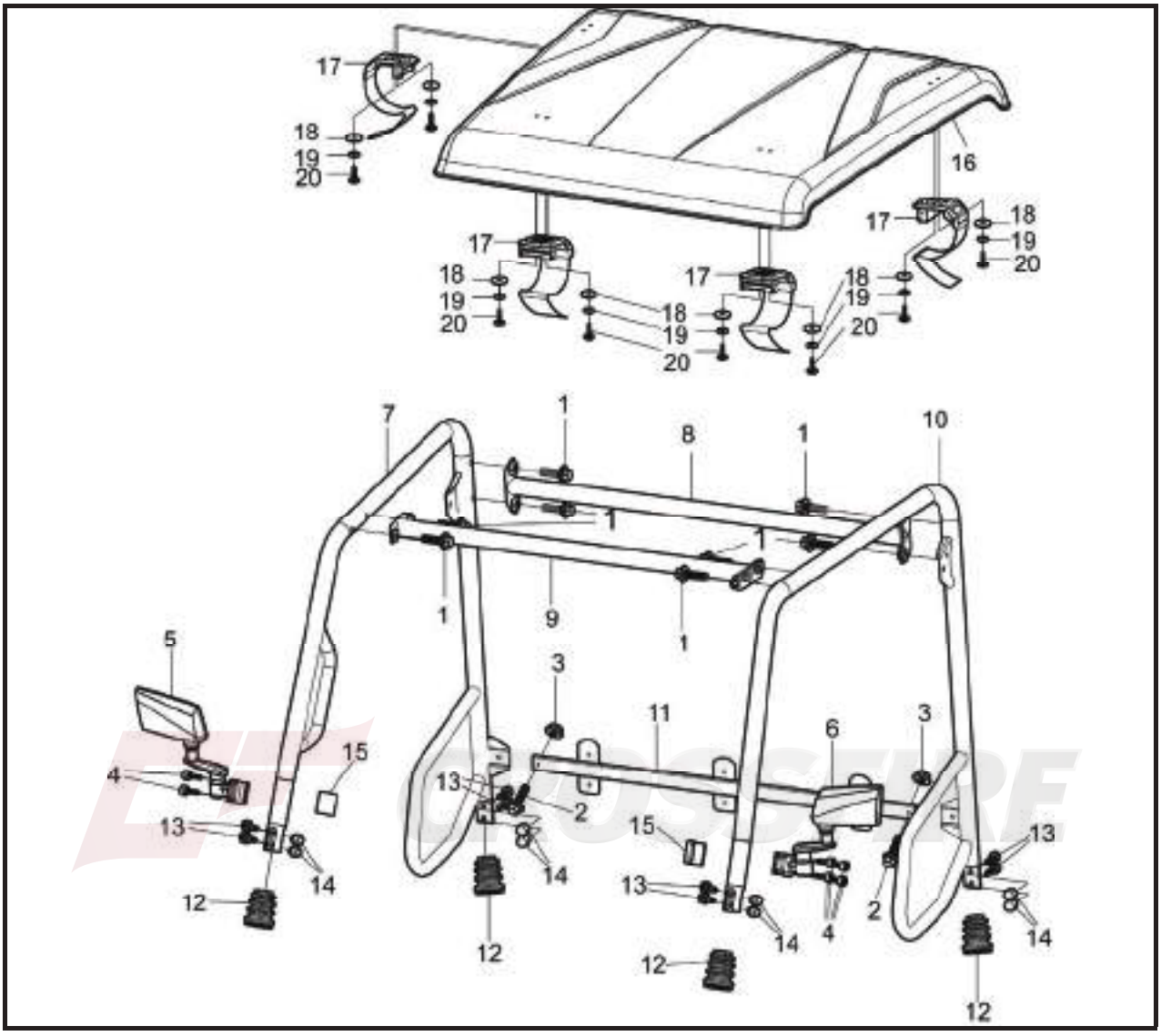

No.	Part Name	Qty	Remarks
	Removing the head shed frame		
1	Hexagon socket head screw M8×20	8	
2	Hexagon socket head screw	2	
3	Hexagon flange bolt	2	
4	Hexagon socket head screw M4×12	8	
5	Left rear view mirror housing	1	
6	Right rear view mirror housing	1	
7	Shed rod bend comb.(R)	1	
8	Shed rod beam comb. Ⅱ	1	
9	Shed rod beam comb. Ⅰ	1	
10	Shed rod bend comb.(L)	1	

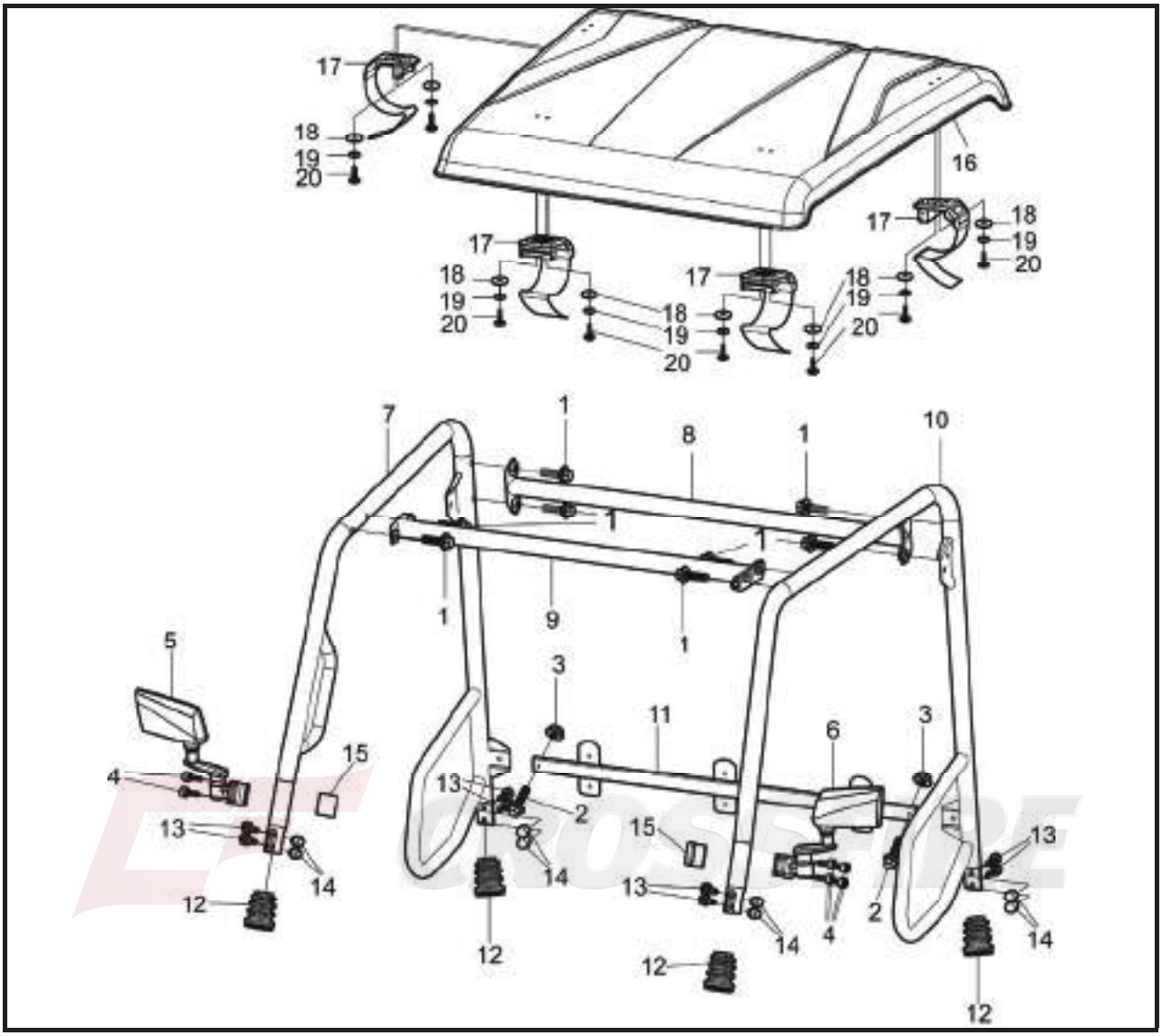

No.	Part Name	Qty	Remarks
11	Backrest support comb.	1	
12	Bellows seal cartridge	2	
13	Socket hexagon screw M6×16	4	
14	Nut	4	
15	Rear view mirror clamp	2	
16	Shed	1	
17	Buckle assy	4	
18	Rubber washer	8	
19	Washer Φ6×Φ18×1.6	8	
20	Hexagon small head screw	8	
21	Bellows seal cartridge	2	

DIRECTION SYSTEM

Steering Wheel part

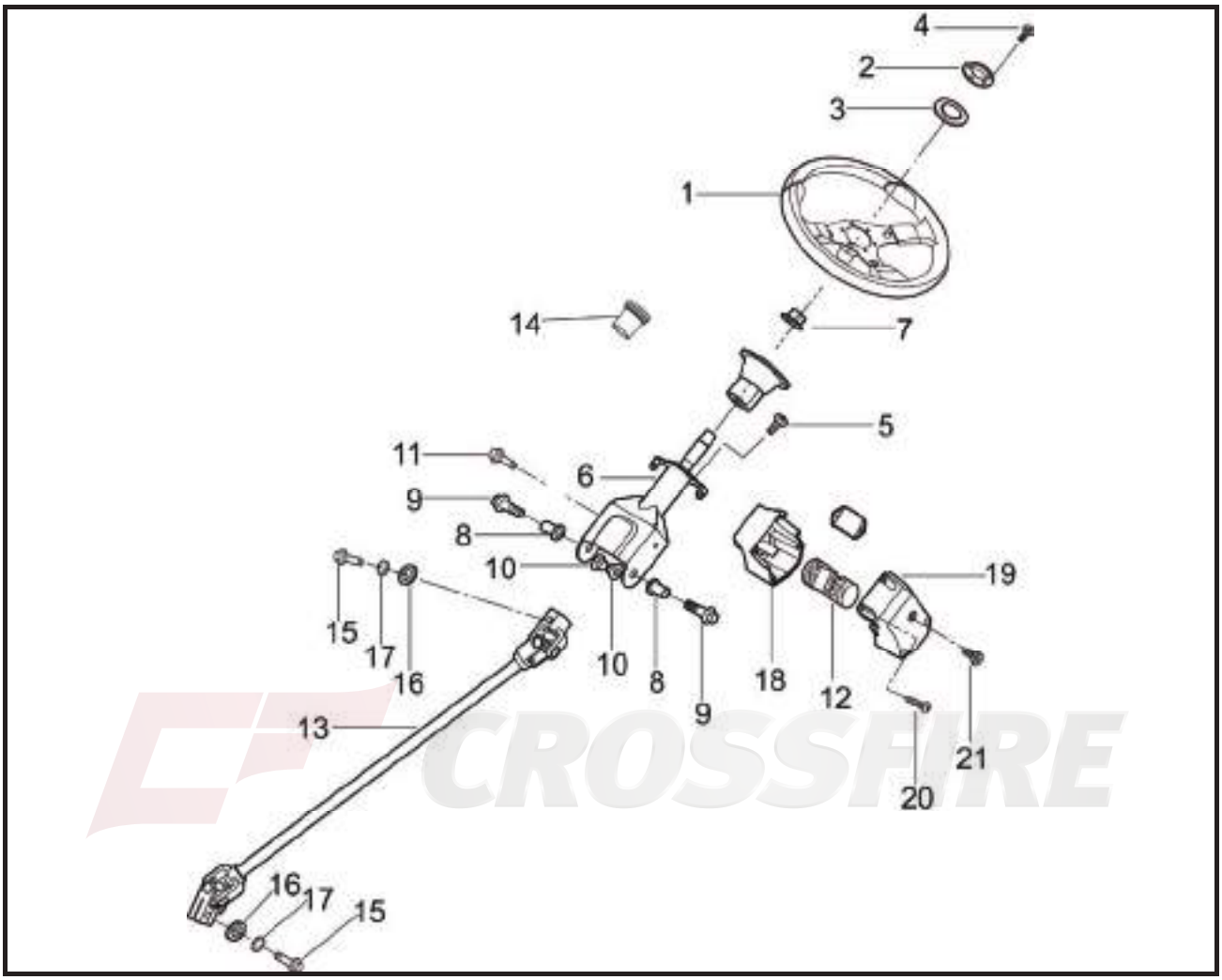

No.	Part Name	Qty	Remarks
	Removing the steering wheel		
1	Steering wheel body	1	
2	Decoration cover for steering wheel	1	
3	Horn assy	1	
4	Hexagon socket head screw M6×16	6	
5	Screw M5×16	1	
6	Steering column	1	
7	Hexagon flange bolt M12×1.25	1	
8	Nylon bushing II	2	
9	Hex flange step bolt M8×13-Φ12×12	2	
10	Hexagon flange self-locked nut M8	2	
11	Hexagon flange bolt M8×16	1	
12	Ignition switch assy.	1	
13	Steering transmission shaft assy	1	

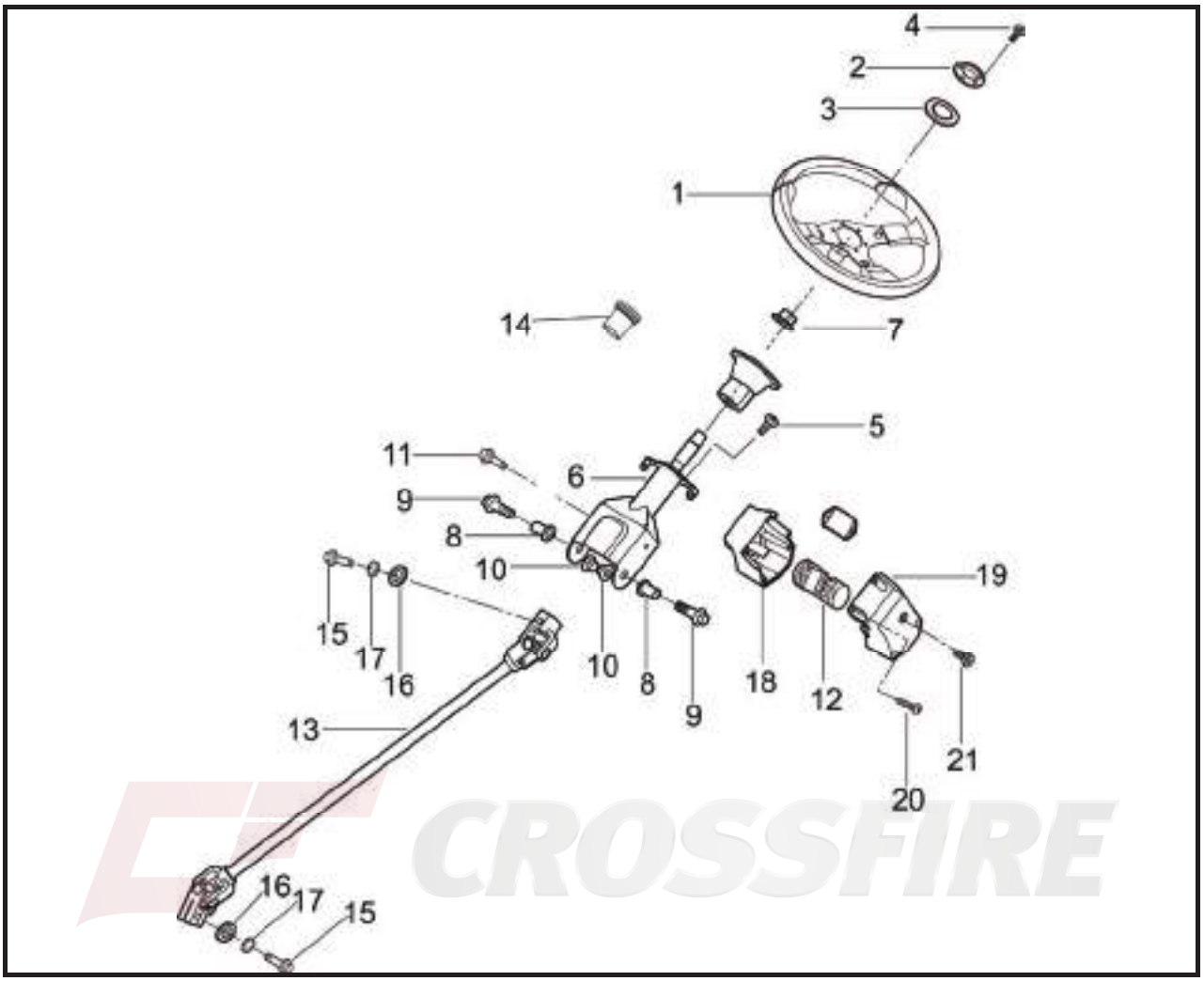

No.	Part Name	Qty	Remarks
14	Steering column trim cover	1	
15	Hexagon flange self-locked nut M8×30	3	
16	Washer Φ8×Φ16×1.6	3	
17	Split washer-8	3	
18	Ignition switch upper cover	1	
19	Ignition switch lower cover	1	
20	Cross small plate head tapping screw ST3.9×25	4	
21	Socket hexagon flat head screws M6×16	2	

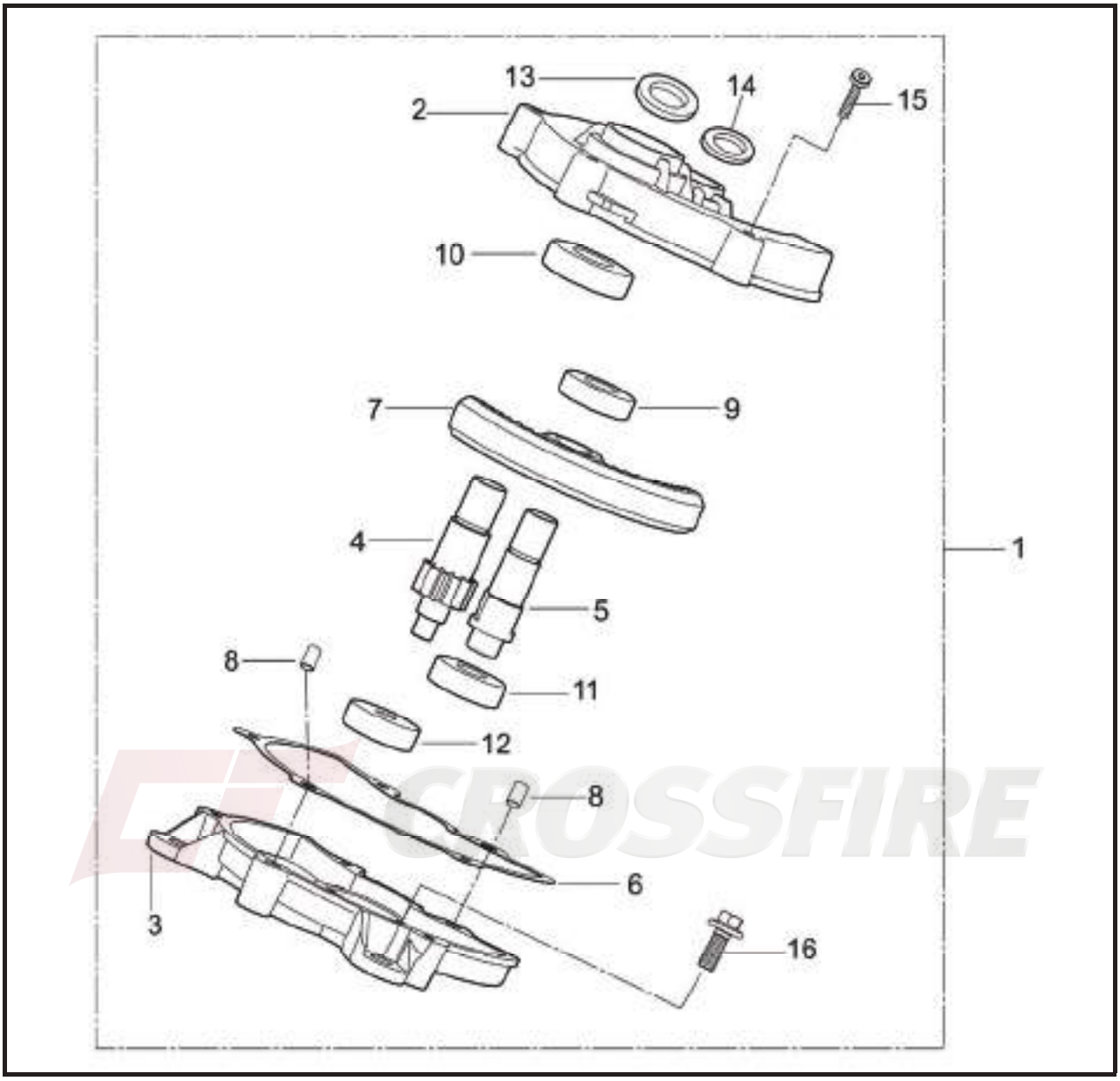

No.	Part Name	Qty	Remarks
1	Steering parts	1	
2	Steering mechanism upper cover	1	
3	Steering mechanism base	1	
4	Steering mechanism shaft I	1	
5	Steering mechanism shaft II	1	
6	Paper gasket，steering mechanism	1	
7	Gear，steering mechanism	1	
8	Location pin Φ8×Φ6.5×12	2	
9	Bearing 6003-2RZ	1	
10	Bearing 6004-2RZ	1	

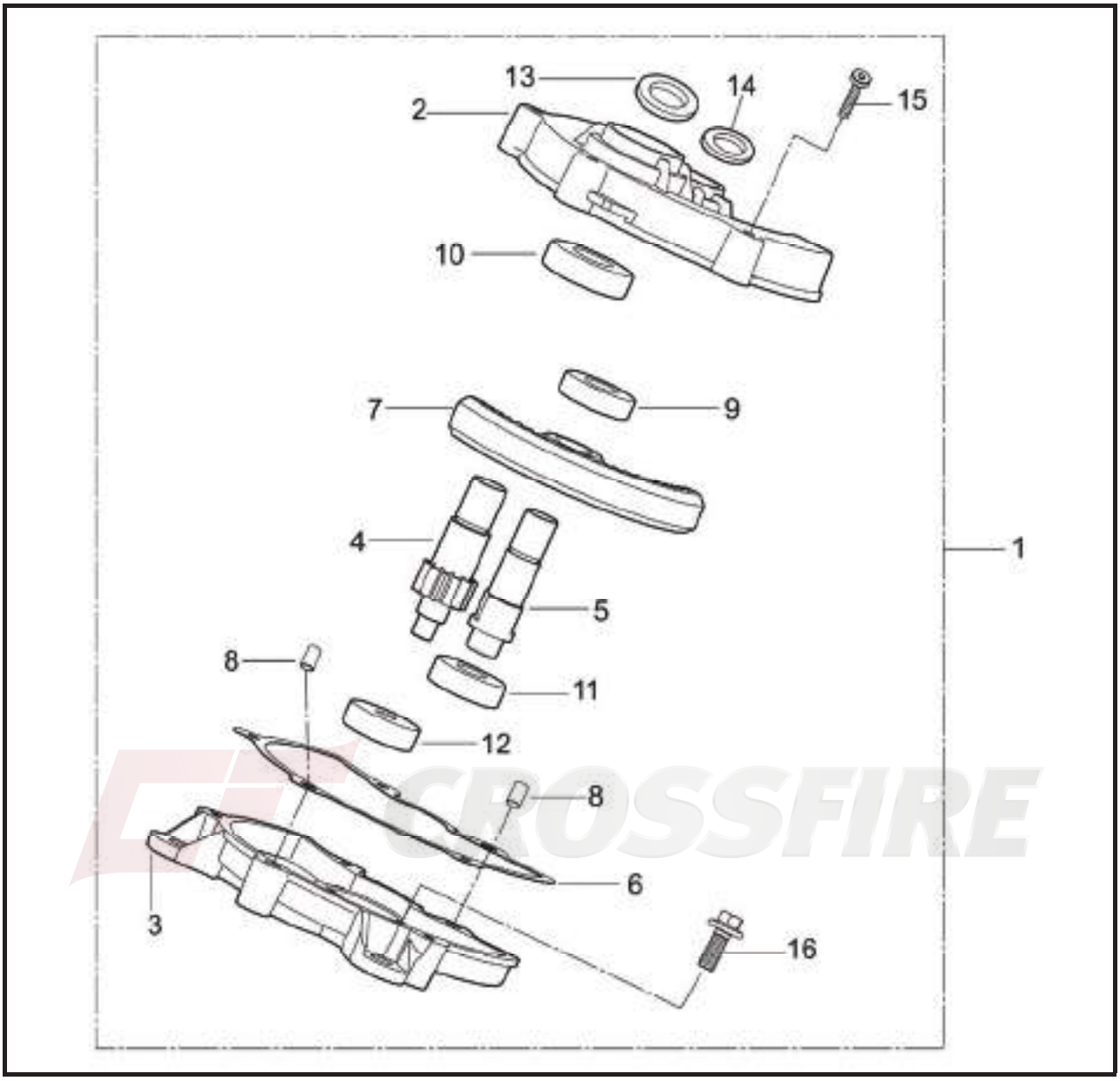

No.	Part Name	Qty	Remarks
11	Bearing 6202-2RZ	1	
12	Bearing 6300-2RZ	1	
13	Oil seal Φ34×Φ20×7	1	
14	Oil seal Φ34×Φ17×5	1	
15	Hexagon socket head bolt M6×40	5	
16	Bolt M10×1.25×25	3	

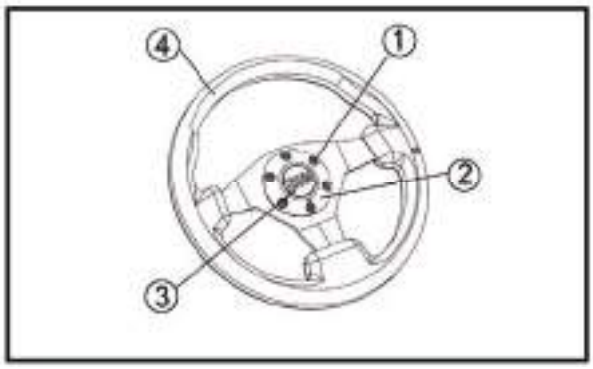

THE STRUCTURE OF STEERING WHEEL PART

DIASSEMBLING THE PARTS OF THE STEERING WHEEL

Remove:

- screw M6×16 ①
- Decoration cover for steering wheel ②
- Horn assembly ③

a. Takes down the screw ①

b. Takes down the decoration cover for steering wheel ② and horn assembly ③

c. Use the special tools pull out the steering wheel ④.

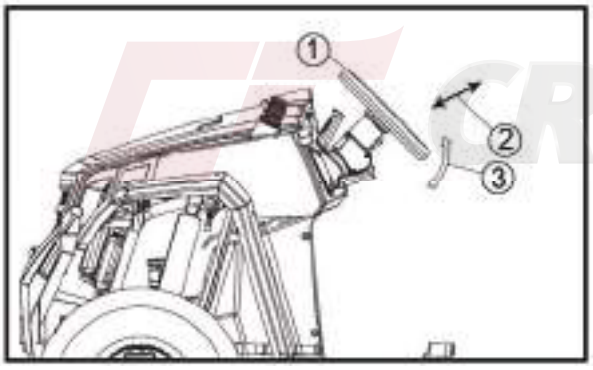

CHECKING THE PARTS OF THE STEERING WHEEL

Check:

- steering wheel ①
- rocky ledge ②
- reverse turning clearance ③

crack/ break → Replace.

loose/play → Adjust.

the steering wheel to rotate whether nimble, do not have stagnation. → Adjust the torque of the steering wheel whether obviously increase → Adjust.

NOTE:

The steering force cutting which exerts to transfers in steering wheel outflow boundary is smaller than 245N.

The reverse running clearance whether does surpass the limited stipulation → Adjust

NOTE:

The reverse running clearance is less than 30mm.

The grip part which is covered by the foam whether has damaged, if it is, must replace a new steering wheel.

CROSSFIRE

Inspect fastens nut of the steering wheel whether does have flaw and fissure , if it is, must replace.

Check the internal spline between the steering wheel and steering column whether have damaged, if the attrition is serious, must replace the steering wheel.

CHECKING AND SERVICE THE STEERING COLUMN PARTS

1. Check:
   - steering column tube ①
   - bearing ②
   - central axis of the steering shaft ③
   - spline ④
   - loosening ⑤

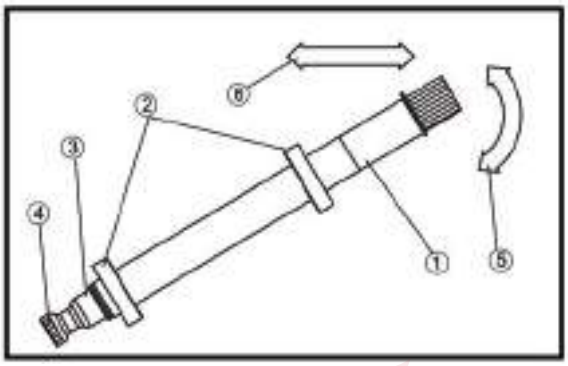

The central axis of the steering shaft whether flexible and moves. If does, dismantle and check the axis, bearing and retaining ring whether ware or damaged, according to the inspection situation to instead the parts.

2. Check:
   The two ends of the spline on the central axis whether is wear out, if so, instead the central axis.
3. Check:
   The spline in the two ends of the central axis whether have wear, if dose, instead the central axis.
4. Check:
   The steering shaft tube and welding line of the branch whether have crack and corrosion, if it does, instead the steering shaft tube.

DIASSEMBLING THE STEERING DRIVE AXLE

1. Loose the clamp one piece M8×30 flange bolt in the cross gimbal, internal spline on the top of the steering drive axle, pull out the top of the steering drive axle.
2. Loose the clamp one piece M8×30 flange bolt in the cross gimbal, spline on the bottom of the steering drive axle, pull out the lower of the steering drive axle.

CROSSFIRE

STEERING MACHINE PARTS

THE STRUCTURE OF THE STEERING

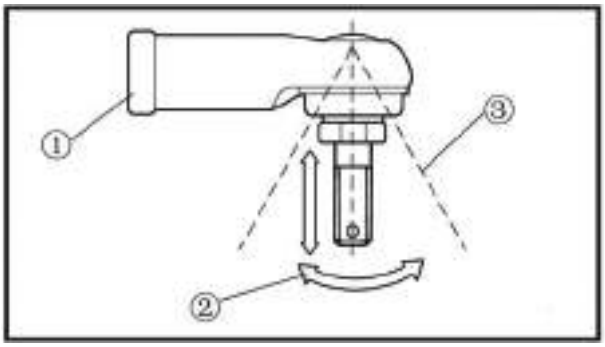

2. Check:
   - tie-rod end ①
   - turning ②
   - rocky ledge ③

   Free play → Replace the tie-rod end.

   Turns roughly → Replace the tie-rod end.

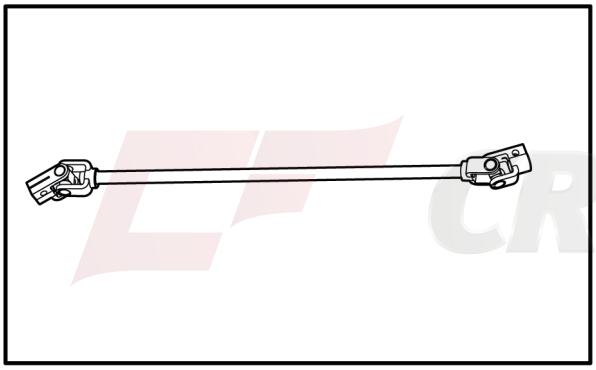

3. Check:
   - tie-rods

   Bends/damage → Replace.

4. Check:
   - steering joint

   Crack/distortion → Replace.

CROSSFIRE

BRAKE SYSTEM

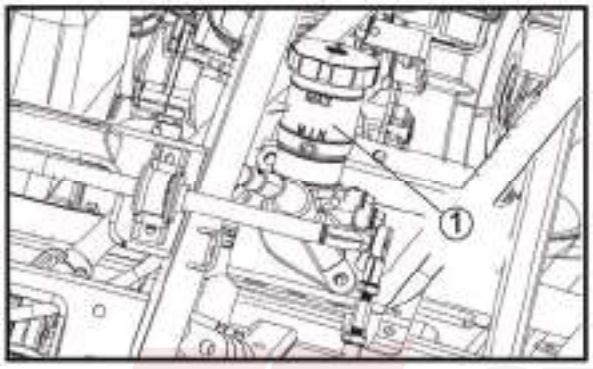

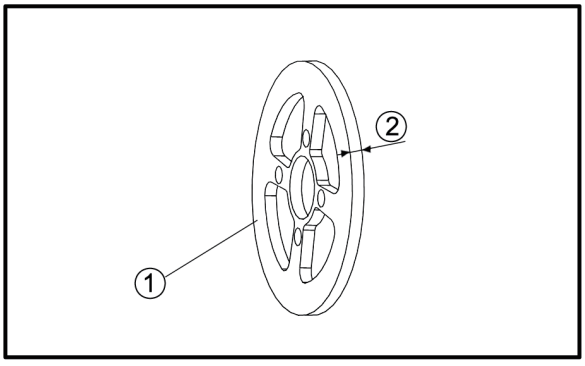

PREPARATION FOR CHECKING BEFORE THE MAINTENANCE OF THE BRAKE SYSTEM.

Brake system is crucial to the life safety of the operator and therefore must be periodically inspected and maintained.

This vehicle uses the single return route hydraulic pressure disc brake system. Please follow the tips of inspection as below.

1. To check the amount of liquid in the oil cup. If it is lower than the minimum mark, refill the box with the same type of fluid as was recommended by the manufacturer, to ensure to fluid level is higher than the minimum mark.

2. The brake should be kept between 3mm-5mm, Otherwise, please adjust the screw to meet required travel distance.

3. Inspect the brake pedal does maintain the certain counter-tension

When checks disk brake plate, the saved liquid in the oil cup will pour automatically into the pressure pipe and the liquid level along with it to reduce, the periodic inspection the disk brake plate liquid volume will be an important project.

Must use DOT4 Brake

4.

- rear disk brake plate ①
- thickness ②

Periodical inspection of the wear condition of rear disk brake plate is also necessary. Disk brake plate must be replaced depending on its wear condition.

5. Disk brake plate uses hydraulic pressure of the brake fluid. Therefore, fuel pipe must be periodically inspected and replaced.

Inspection method: If the oil tubing has the aging, crack or distortion, must replace the oil tubing.

CROSSFIRE

Front and Rear Disk Brake Parts

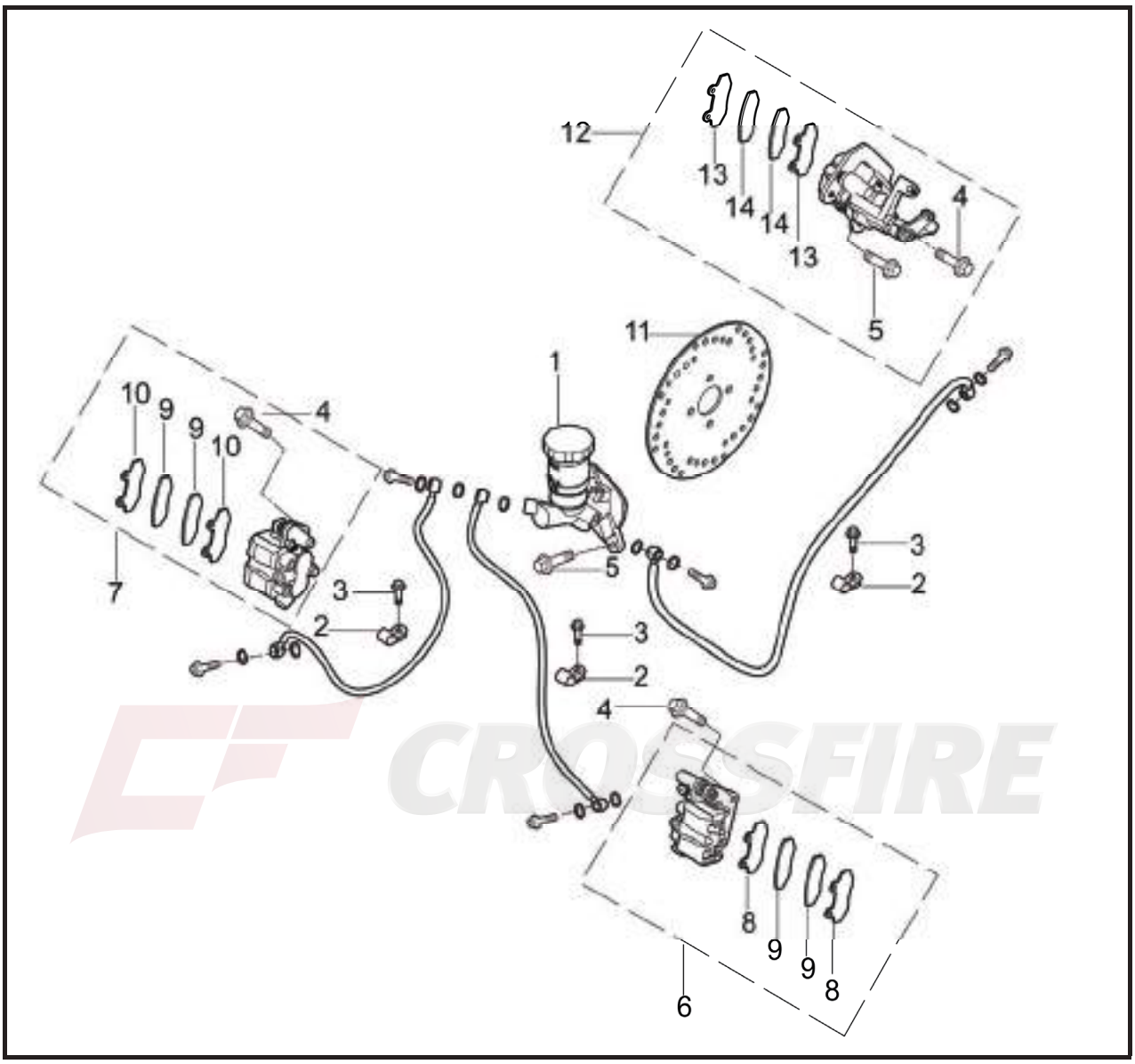

	Removing the disk brake parts		
1	Auxiliary bumper	1	
2	Cable Clip	5	
3	Hexagon flange bolt M6×16	5	
4	Hexagon flange self-locked nut M8×25	6	
5	Hexagon flange self-locked nut M8×30	4	
6	Front left brake caliper	1	
7	Front right brake caliper	1	
8	Front left outer brake pad assy.	2	
9	Front inner brake pad assy.	4	

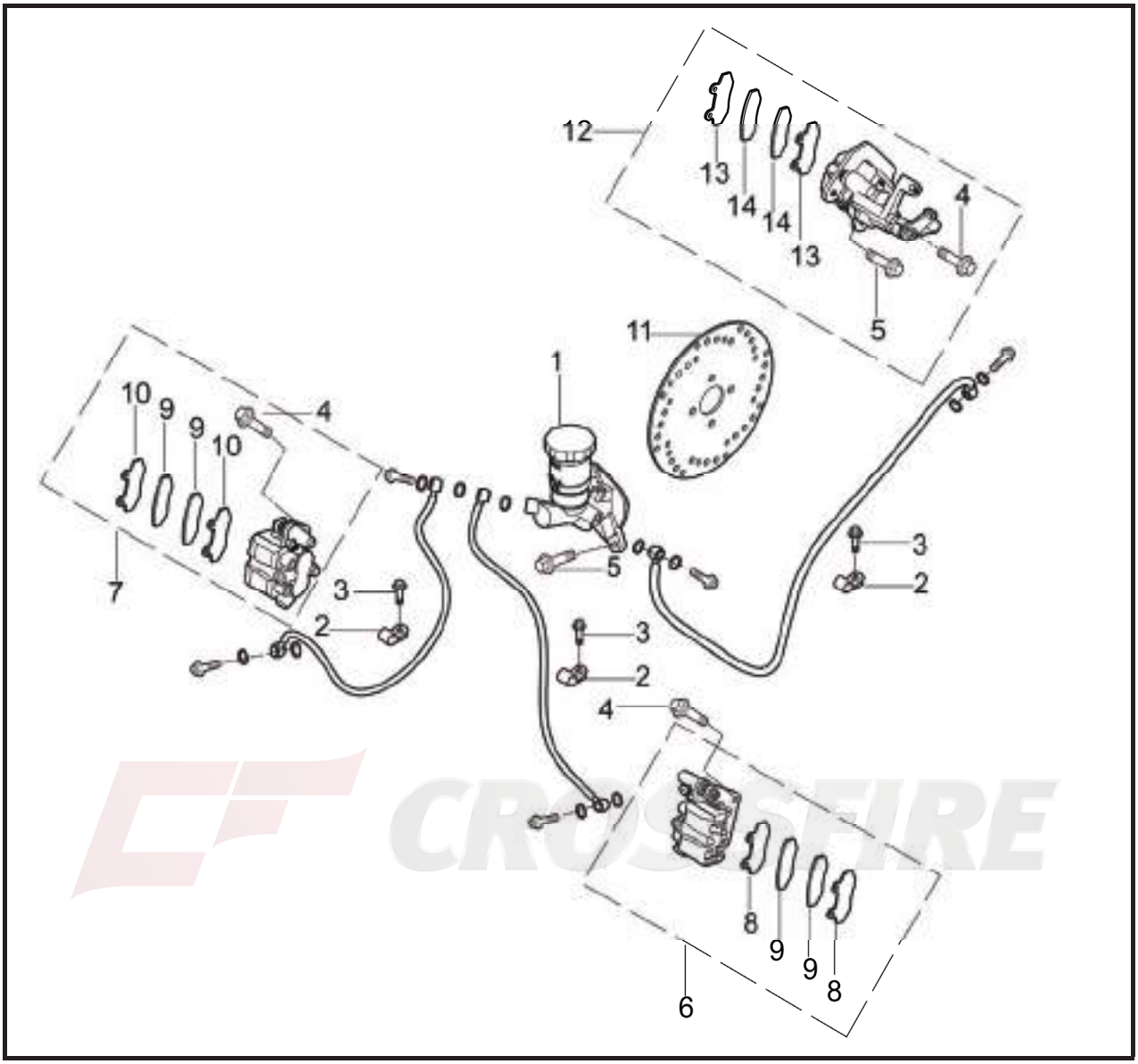

10	Front right outer brake pad assy.	2	
11	Braking plate	1	
12	Rear brake caliper assy.	1	
13	Rear outer brake pad assy.	2	
14	Rear inner brake pad assy.	2	

CHECKING THE FRONT BRAKE DISC

1. Check:
   - brake disc

   Galling/damage → Replace.

2. Measure:
   - brake disc deflection

   Out of specification → Check the wheel runout.

   If wheel runout is within the limits, replace the brake disc.

Brake disc maximum deflection
0.10 mm (0.004 in)

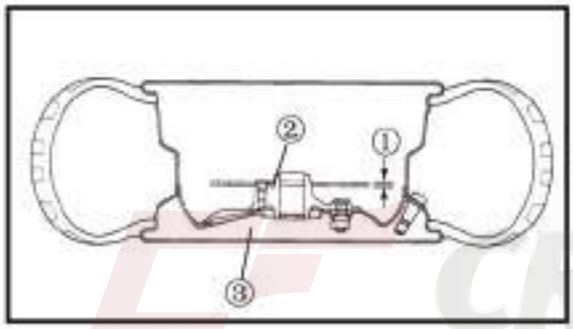

- brake disc thickness ①
- wheel hub ②
- wheel tyre ③

  Out of specification → Replace.

Brake disc minimum thickness
3.0 mm (0.12 in)

CROSSFIRE

NOTE:

Apply the locking agent to the 30Nm bolt with screw down.

REPLACING THE FRONT BRAKE PADS

NOTE:

It is not necessary to disassemble the brake caliper and brake hose to replace the brake pads.

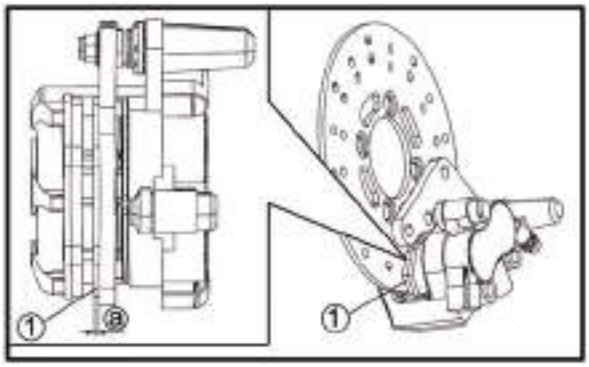

1.Check:
- brake pad ①

  Damage/wear → Replace

2.Measure:
- brake pad thickness ⓐ

  Out of specification → Replace the brake pads as a set.

Brake pad wear limit
1.5 mm (0.06 in)

3. Install:
- brake pads
- brake pad spring

NOTE:

Always install new brake pads and brake pad spring as a set.

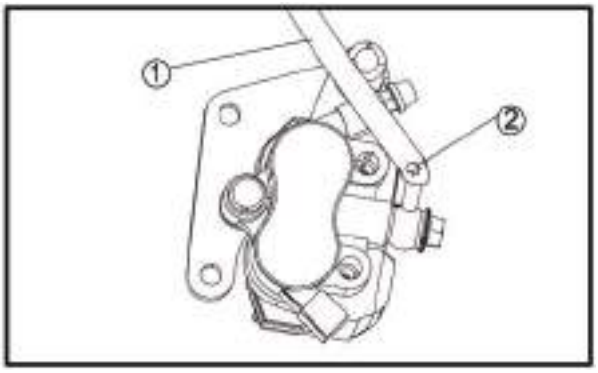

a. Connect a suitable hose ① tightly to the brake caliper bleed nozzle ②. Put the other end of this hose into an open container.

b. Loosen the brake caliper bleed screw and, using a finger, push the caliper piston into the brake caliper.

c. Tighten the brake caliper bleed screw.

Brake caliper bleed screw
6 Nm (0.6 m · kg, 4.3 ft · lb)

d. Install the retaining bolts and brake caliper.

Brake pad holding bolt
18Nm (1.8 m · kg, 13 ft · lb)

CROSSFIRE

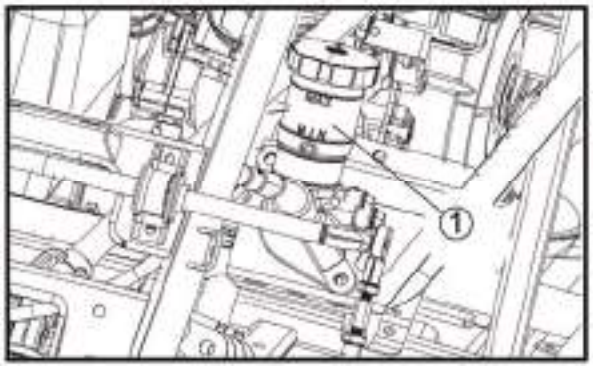

4. Check:
  • brake fluid level
  • minimum level mark ①

Must use DOT4 Brake Fluid

5. Check:
  • brake pedal operation
  Soft or spongy feeling → Bleed the brake system.

DISASSEMBLING THE FRONT BRAKE CALIPERS

WARNING:

• Brake caliper is one of the most important security components. Disassembly and maintenance must have a rich experience in technology and complete tool.
•Wrong disassembly and reassembly may cause serious injury and even death. Replace damaged brake caliper.
•If only replace the brake caliper of one side, please check carefully whether the braking force of right and left are balance and equal.

CROSSFIRE

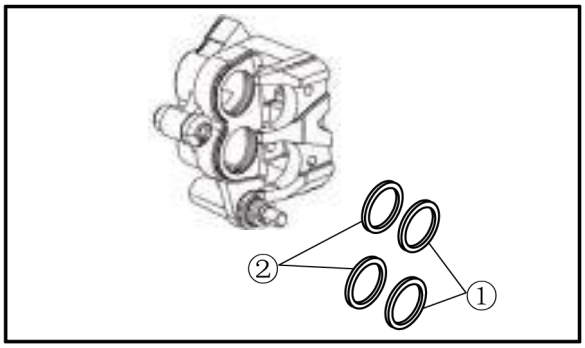

1. Remove:
  • brake caliper pistons
  • dust seals ①
  • caliper piston seals ②

a. Blow compressed air into the hose joint opening to force out the caliper piston from the brake caliper body.

WARNING:

• Never try to pry out a caliper piston.
• Cover the caliper piston with a rag. Be careful not to get injured when the piston is expelled from the caliper cylinder.

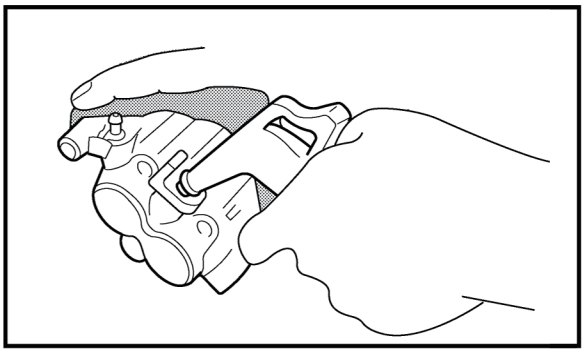

b. Remove the dust seals and caliper piston seals.

WARNING:

All internal brake components should be cleaned in new brake fluid only. Do not use solvents as they will cause seals to swell and distort.

2. Check:
   - brake caliper pistons ①
     Scratches/rust/wear → Replace the brake caliper assembly.
   - brake caliper cylinders ②
     Wear/scratches → Replace the brake caliper assembly.
   - brake caliper body ③
     Cracks/damage → Replace.
   - brake fluid delivery passage (brake caliper body)
     Blockage → Blow out with compressed air.

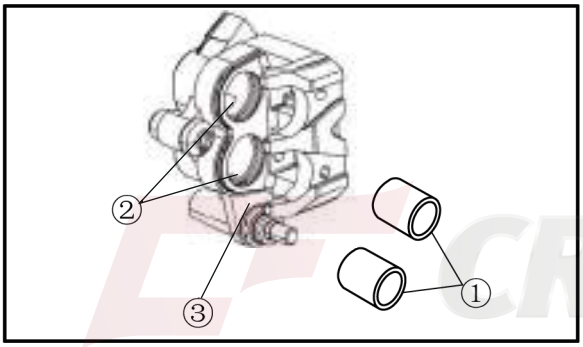

WARNING:

Replace the caliper piston seals and dust seals whenever the brake caliper is disassembled.

CROSSFIRE

ASSEMBLING THE FRONT BRAKE CALIPERS

WARNING:

• All internal brake components should be cleaned and lubricated with new brake fluid only before installation.

Must use DOT4 Brake Fluid

• Replace the caliper piston seals and dust seal whenever a brake caliper is disassembled.

1. Install:
   - caliper piston seals ①
   - dust seals ②

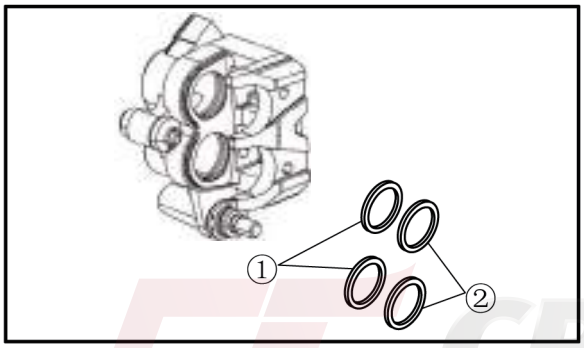

CROSSFIRE

2. Install:
   - brake caliper pistons ①

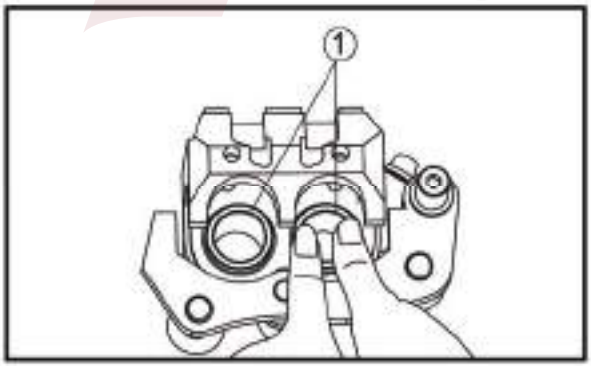

INSTALLING THE FRONT BRAKE CALIPERS

The following procedure applies to both of the front brake calipers.

1. Install:
   - brake caliper assembly
   - bolt flange

48Nm (4.8m · kg,35 ft · lb)

   - brake hose ①
   - copper washers ②
   - union bolt ③

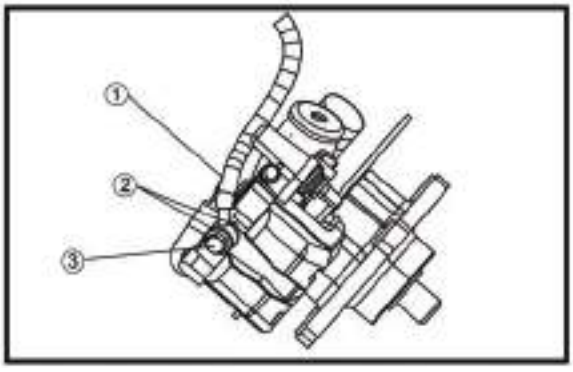

NOTE:

When installing the brake hose on the brake caliper, make sure that the brake pipe touches the projection a on the brake caliper.

WARNING:

Proper brake hose routing is essential to insure safe vehicle operation.

2. Fill:
   - brake reservoir

Must use DOT4 Brake Fluid

NOTE:

Brake fluid may damage painted surfaces or plastic parts. Always clean up spilled brake fluid immediately.

3. Air bleed:
   - brake system

CROSSFIRE

4. Check:
   - brake fluid level

   Brake fluid level is below the “LOWER” level line

   → Add the recommended brake fluid to the proper level.

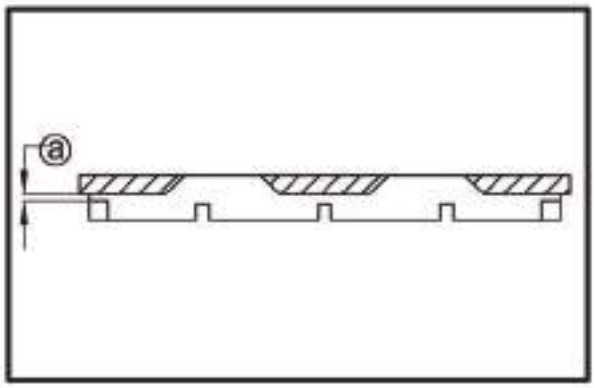

REPLACING THE REAR BRAKE PADS

1. Measure:
   - brake pad wear limit ⓐ
     Out of specification → Replace the brake pads as a set.

Brake pad wear limit
1.5 mm (0.06 in)

2. Install:
   - brake pads
   - brake pad spring

NOTE:

Always install new brake pads, new brake pad shims, new insulators, and a new brake pad spring as a set.

3. Check:
   - brake fluid level
4. Check:
   - brake pedal operation
     Soft or spongy feeling → Bleed the brake system.

CROSSFIRE

DISASSEMBLING THE REAR BRAKE CALIPER

WARNING:

- ***Brake caliper is one of the most important security components. Disassembly and maintenance must have a rich experience in technology and complete tool.***
- ***Wrong disassembly and reassembly may cause serious injury and even death. Replace damaged brake caliper.***
- ***If only replace the brake caliper of one side, please check carefully whether the braking force of right and left are balance and equal.***

1. Remove:
   - brake caliper piston ①
   - dust seal ②
   - caliper piston seal ③

a. Turn the brake caliper piston counterclockwise

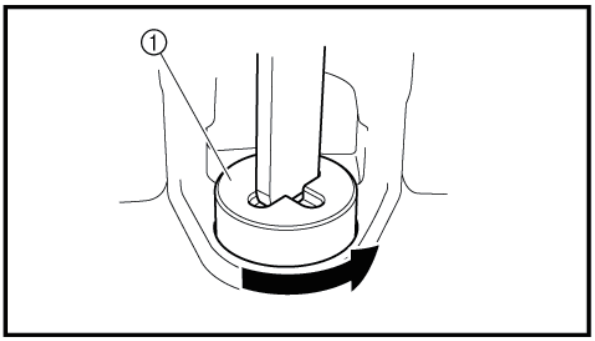

to remove it.

b. Remove the dust seal and caliper piston seal.

WARNING:

All internal brake components should be cleaned in new brake fluid only. Do not use solvents as they will cause seals to swell and distort.

1. Check:
   - brake caliper pistons ①
     Scratches/rust/wear → Replace the brake caliper assembly.
   - brake caliper cylinders ②
     Wear/scratches → Replace the brake Caliper assembly.
   - brake caliper body ③
     Cracks/damage → Replace.
   - brake fluid delivery passage (brake caliper body)
     Blockage → Blow out with compressed air.

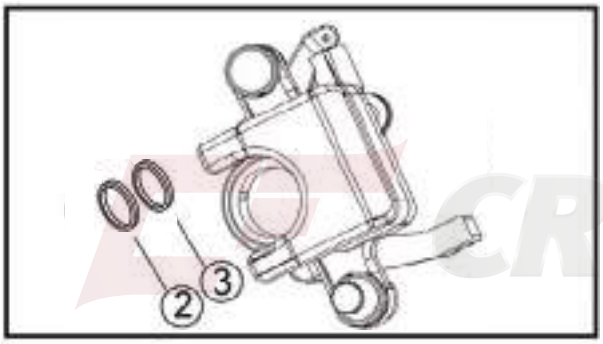

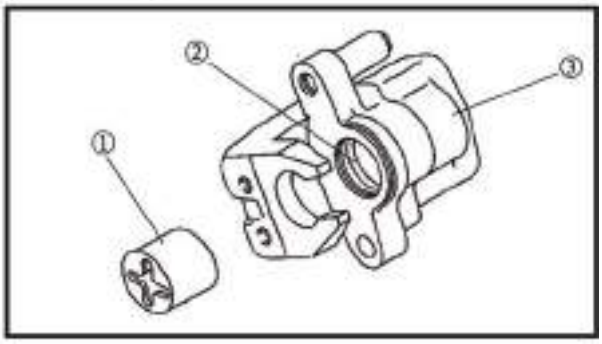

CROSSFIRE

WARNING:

Replace the caliper piston seals and dust seals whenever the brake caliper is disassembled.

ASSEMBLING THE REAR BRAKE CALIPER

WARNING:

- ***All internal brake components should be cleaned and lubricated with new brake fluid only before installation.***

Must use DOT4 Brake Fluid

- ***Replace the caliper piston seal and dust seal whenever a brake caliper is disassembled.***

1. Install:
   - caliper piston seal ①
   - dust seal ②

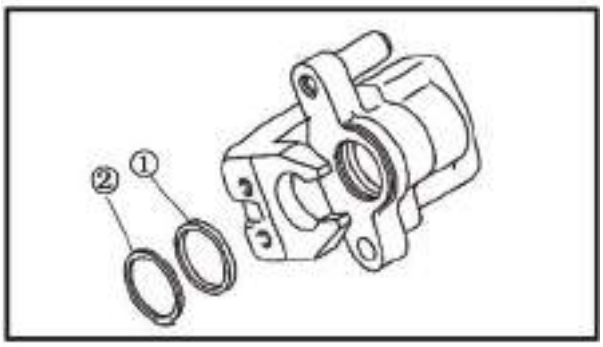

2. Install:
- brake caliper piston

  Turn the brake caliper piston clockwise until section a of the brake caliper piston is level with the surface of the brake caliper body.

NOTE:

Align an end ⓑ of the groove in the brake caliper piston with the punch mark ⓒon the brake caliper body.

3. Install:
- gasket ①
- rear brake case ②
- rear brake case bolts ③

22Nm (2.2 m · kg,16 ft · lb)

- O-ring ④

CROSSFIRE

4. Install:
- rear brake arm shaft ①
- rear brake arm ②
- set bolt ③
- rear brake arm nut ④

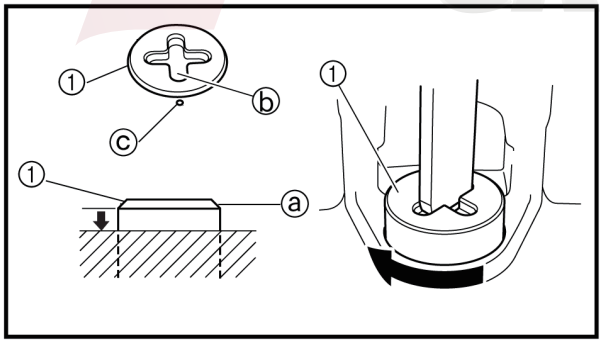

NOTE:

Apply lithium-soap-based grease to the rear brake arm shaft and set bolt.

a. Screw in the rear brake arm shaft counterclockwise completely so that the punch mark ⓐ on the rear brake arm shaft is between the alignment marks ⓑ.

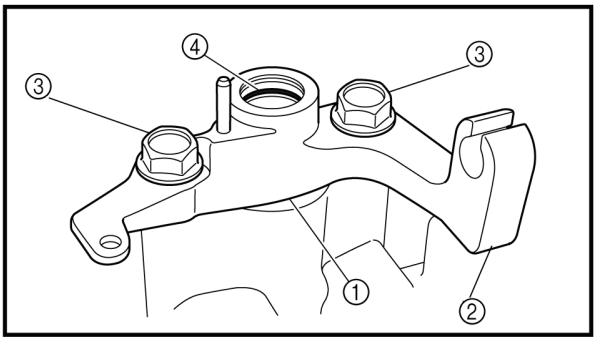

NOTE:

The hole for the rear brake arm shaft has multiple threads. If the punch mark ⓐ on the rear brake arm shaft is not between the alignment marks ⓑ when the rear brake arm shaft is screwed in completely, remove the rear brake arm shaft and screw it in from a different starting position.

b. Turn the rear brake arm shaft approximately 60° clockwise.

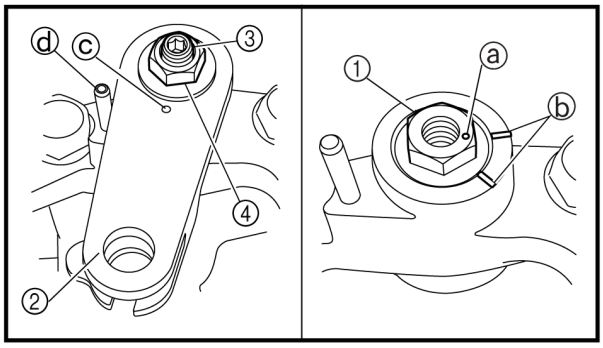

c. Install the rear brake arm to the rear brake arm shaft so that the punch mark ⓒ on the rear brake arm is aligned with the punch mark ⓐ on the rear brake arm shaft.
d. Turn the rear brake arm until it contacts the pin ⓓ.
e. Finger tighten the set bolt.
f. Tighten the rear brake arm nut.

5. Install:
- brake pad (piston side) ①
  (with insulator and pad shim)

NOTE:

Align the projection a on the piston side of the brake pad with the groove in the brake caliper piston.

6. Install:
- brake pad holding bolts

17Nm (1.7 m · kg,12 ft · lb)

CROSSFIRE

INSTALLING THE REAR BRAKE CALIPER

1. Install:
- brake caliper assembly
- brake caliper mounting bolts

40Nm (4.0m · kg,29 ft · lb)

- brake hose ①
- copper washers
- union bolt ②

48Nm (4.8m · kg,35 ft · lb)

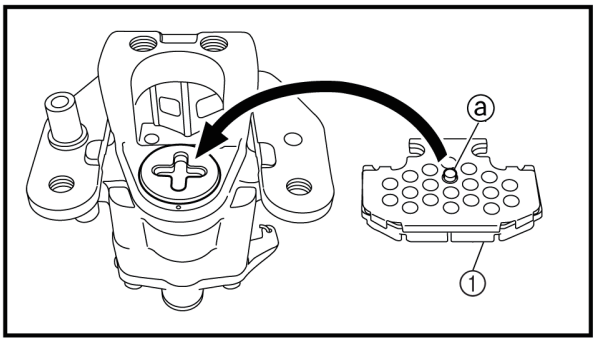

NOTE:

Tighten the union bolt while holding the brake hose as shown.

WARNING:

Proper brake hose routing is essential to insure safe vehicle operation.

2. Fill:
- brake reservoir

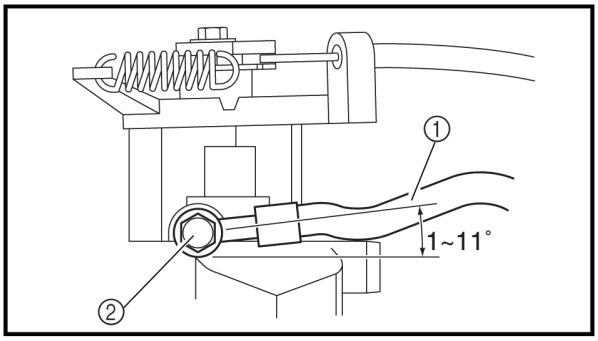

Must use DOT4 Brake Fluid

NOTE:

Brake fluid may damage painted surfaces or plastic parts. Always clean up spilled brake fluid immediately.

3. Air bleed:
   - brake system
4. Check:
   - brake fluid level

     Brake fluid level is below the “MIN” level line → Add the recommended brake fluid to the proper level.
5. Adjust:
   - rear brake cable free play

CROSSFIRE

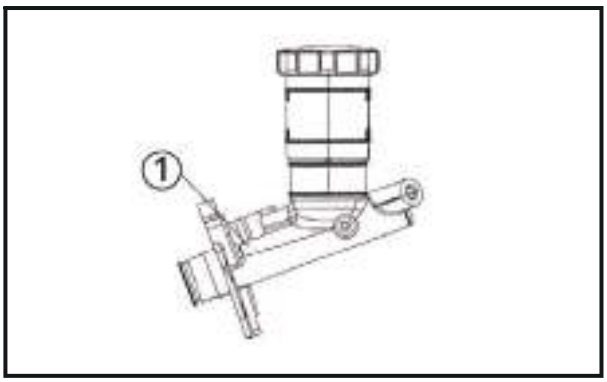

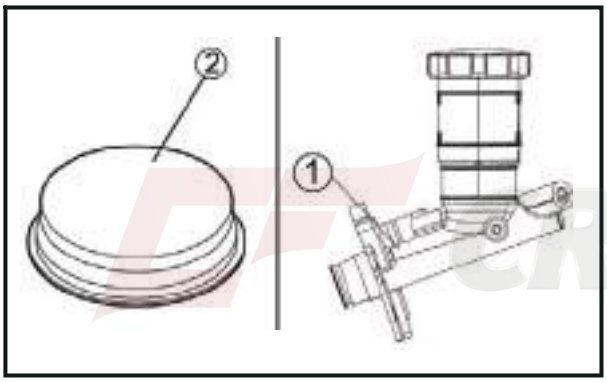

CHECKING THE MASTER CYLINDER

1. Check:
   - brake master cylinder ①
     Wear/scratches → Replace the brake master cylinder assembly.
   - brake master cylinder body
     Cracks/damage → Replace.
   - brake fluid delivery passage
     (brake master cylinder body)
     Blockage → Blow out with compressed air.
2. Check:
   - brake master cylinder kit
     Scratches/wear/damage → Replace as a set.
3. Check:
   - brake fluid reservoir ①
   - brake fluid reservoir diaphragm ②
     Cracks/damage → Replace.

ASSEMBLING THE BRAKE MASTER CYLINDER

WARNING:

- ***All internal brake components should be cleaned and lubricated with new brake fluid only before installation.***

Must use DOT4 Brake Fluid

- ***Whenever a master cylinder is disassembled replace the piston seals and dust seals.***

CROSSFIRE

INSTALLING THE BRAKE MASTER CYLINDER

1. Install:
   - brake master cylinder

16Nm (1.6 m · kg,11 ft · lb)

2. Install:
   - brake pipe

19Nm (1.9 m · kg,13 ft · lb)

   - washer plate
   - brake hose
   - union bolt

27Nm (2.7 m · kg,19 ft · lb)

3. Fill:
   - brake fluid reservoir

Must use DOT4 Brake Fluid

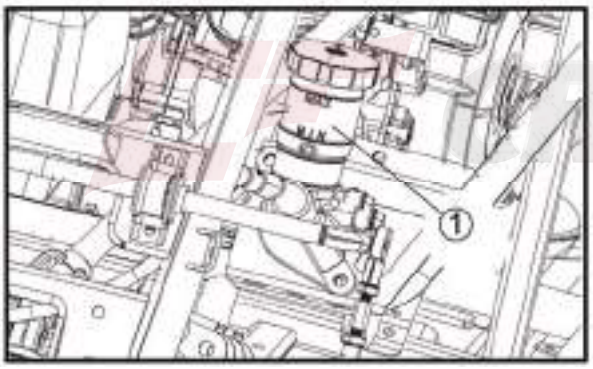

NOTE:

Brake fluid may damage painted surfaces or plastic parts. Always clean up spilled brake fluid immediately.

4. Air bleed:
   - brake system
5. Check:
   - brake fluid level

   Brake fluid level is under the “MIN” level line
   Fill up.

FOOTREST PART

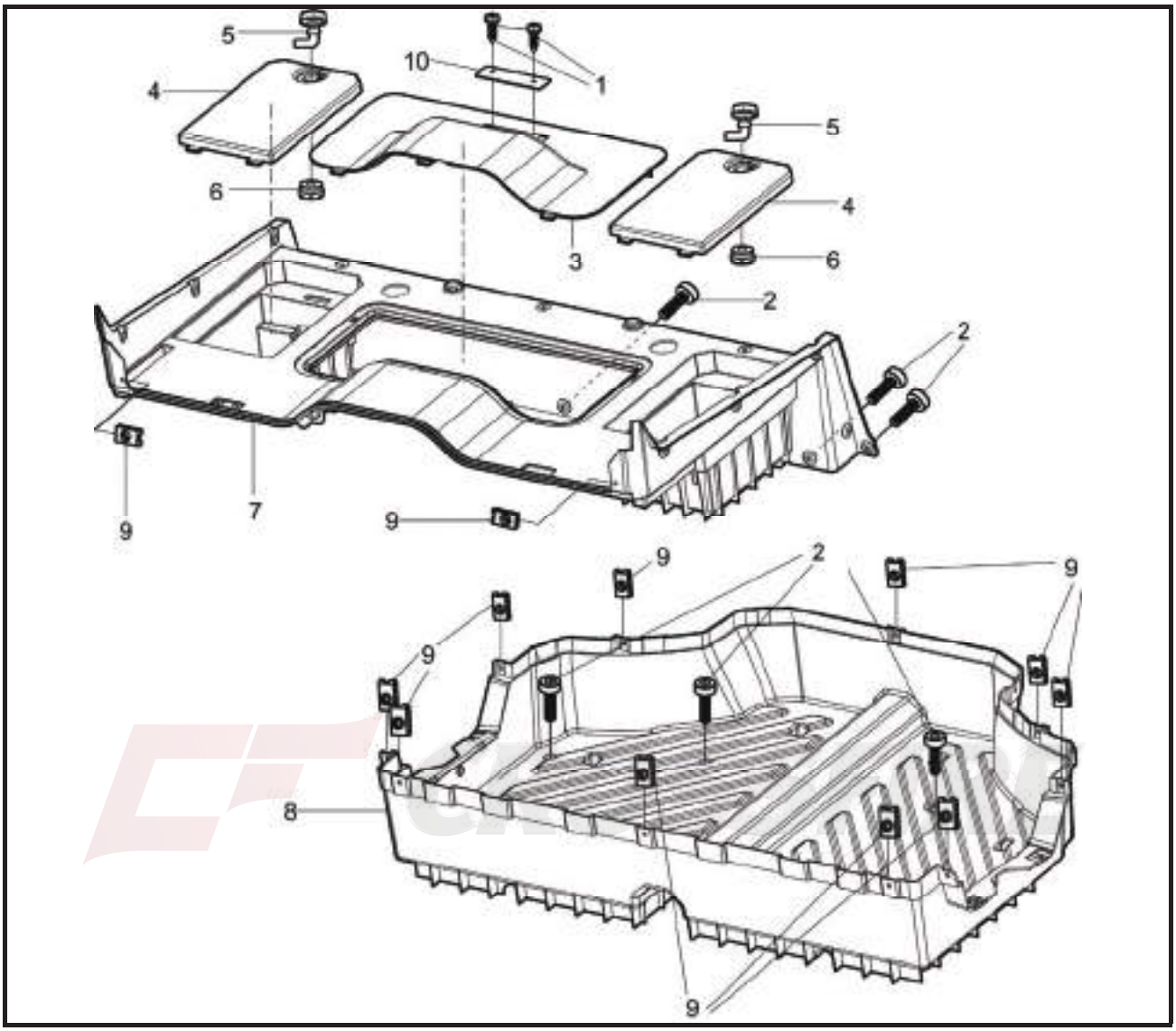

No.	Part Name	Qty	Remarks
	Removing the footrest part		
1	Cross Small Plate Head Screw M5×12	2	
2	Socket Hexagon Flat Head Screws M6×12	24	
3	Adjust window cover	1	
4	Battery mounting cover	2	
5	Front body cover knob	2	
6	Florist type rubber ring	2	
7	Under seat cushion guard plate	1	
8	Footrest cover	1	
9	Thread clip M6×2	18	
10	Debug window handle	1	

WHEEL AND TYRE PARTS

FRONT WHEELS

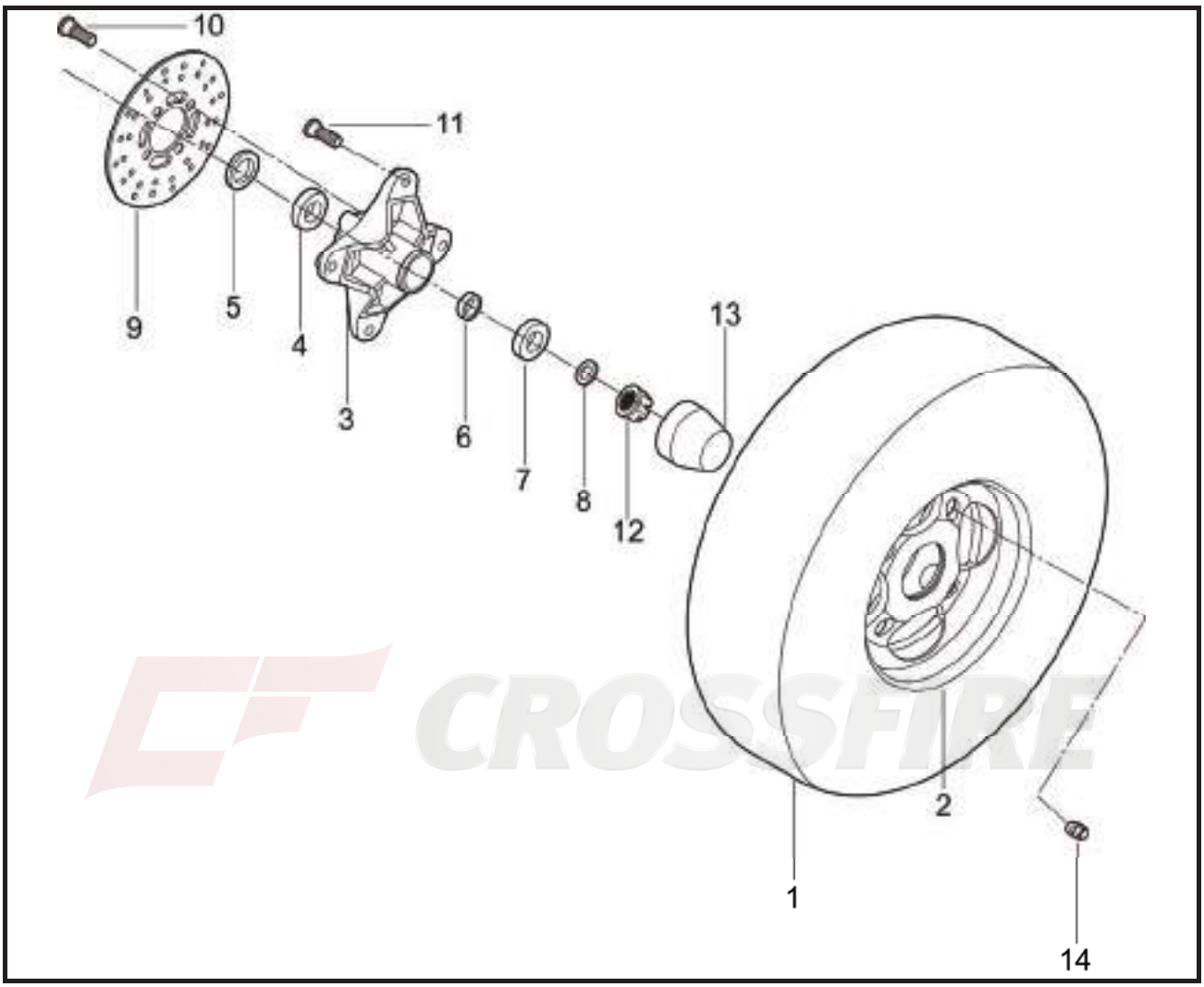

No.	Part Name	Qty	Remarks
	Removing the front wheel		
1	Front tyre	2	
2	Front wheel rim	2	
3	Front hub	2	
4	Bearing 6004-RZ	2	
5	Front steering knuckle oil seal	2	
6	Inner bushing I	2	
7	Bearing 6202-RS	2	**WARNING:**
8	Oil Seal, front knuckle Φ23×Φ35×7	2	***Securely support the vehicle so***
9	Front brake pad	2	***There is no danger of it falling over.***
10	Hexagon step bolt M8×15-Φ15×5	8	

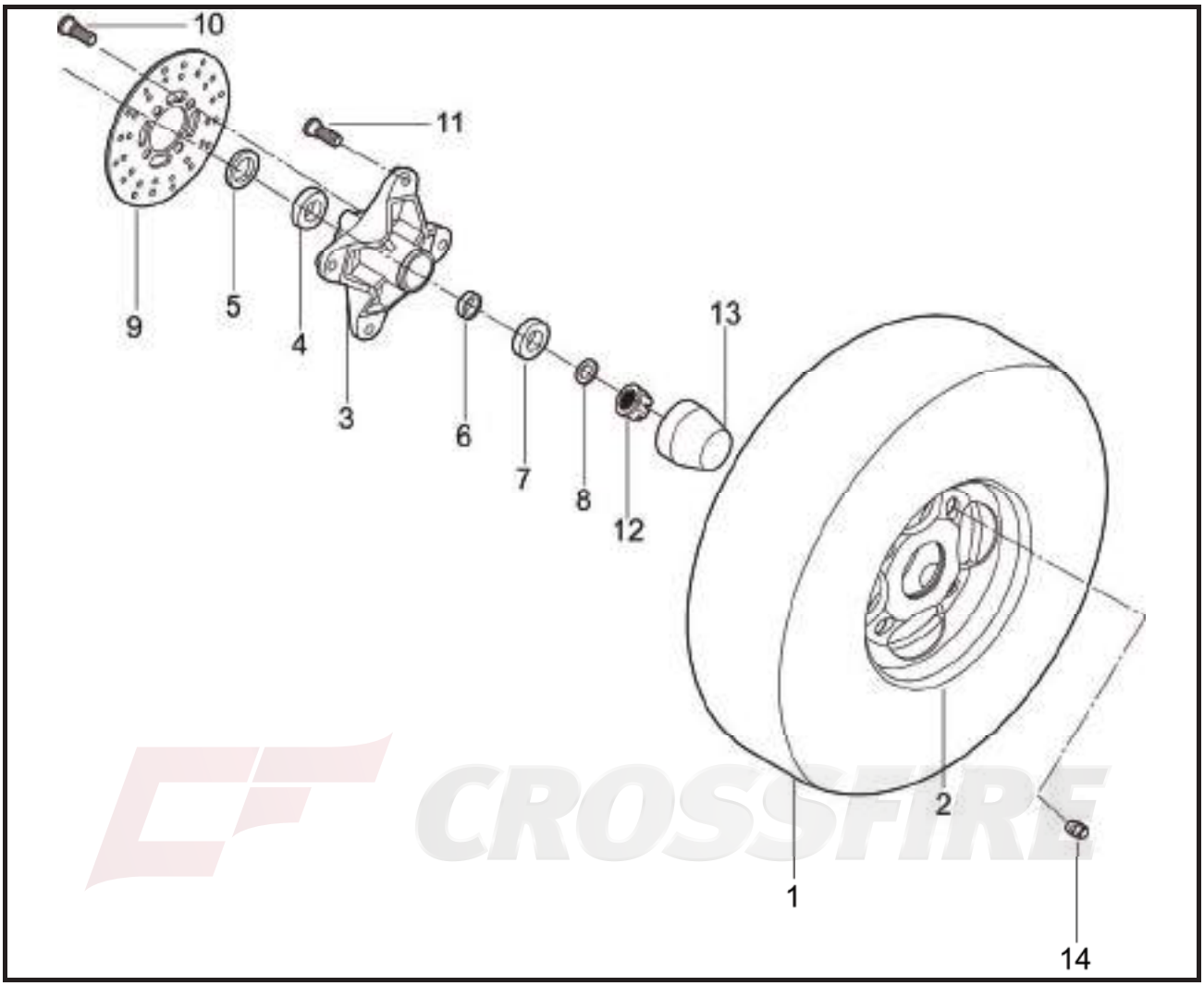

No.	Part Name	Qty	Remarks
11	Bolt	8	
12	Nut	2	
13	Wheel decoration cover	2	**WARNING:**
14	Nut M10	8	***Securely support the vehicle so There is no danger of it falling over.***

REAR WHEELS

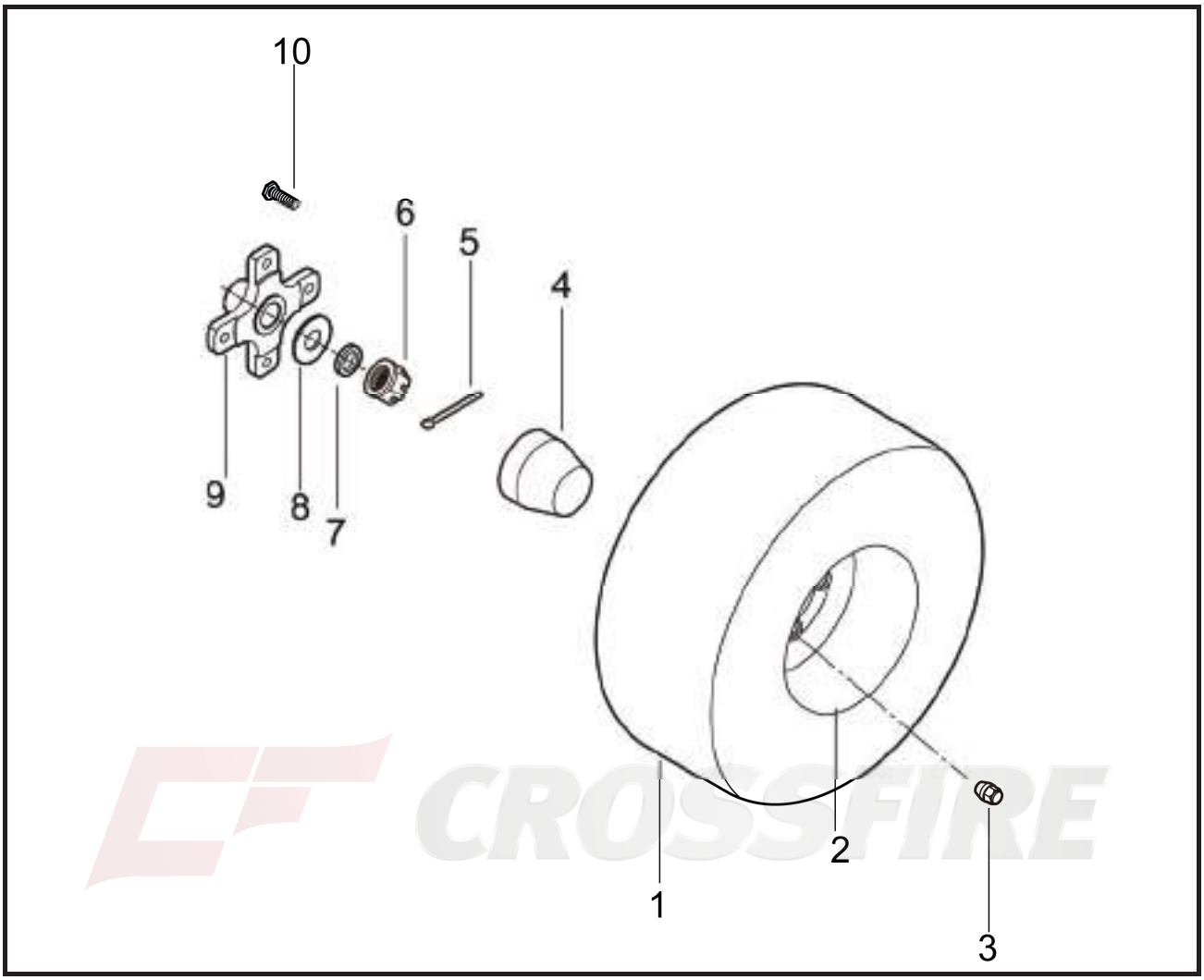

No.	Part Name	Qty	Remarks
	Removing the rear wheel		
1	Rear tyre	2	
2	Rear wheel rim	2	
3	Nut M10	8	
4	Wheel decoration cover	2	
5	Pin 2.5×60	2	**WARNING:**
6	Nut M20×1.5	2	***Securely support the vehicle so***
7	Spring washer Φ20	2	***There is no danger of it falling over.***
8	Washer Φ20×Φ42×4	2	
9	Front hub	2	
10	Bolt	2	

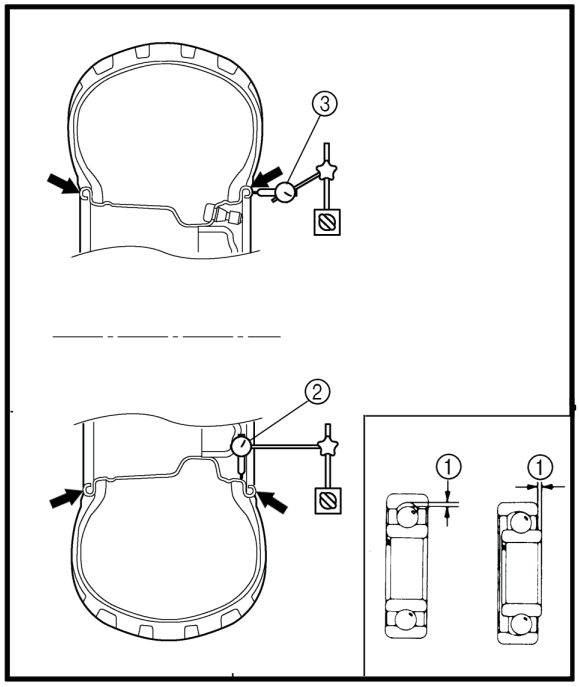

CHECKING THE WHEEL TYRE

1. Check:
   - wheel tyre
2. Measure:
   - wheel runout
     Over the specified limit → Replace the wheel or check the wheel bearing play ①.

3. Check:
   - wheel balance
     Out of balance → Adjust.

Wheel runout limit
Radial ②: 2.0 mm (0.08 in)
Lateral ③: 2.0 mm (0.08 in)

CROSSFIRE

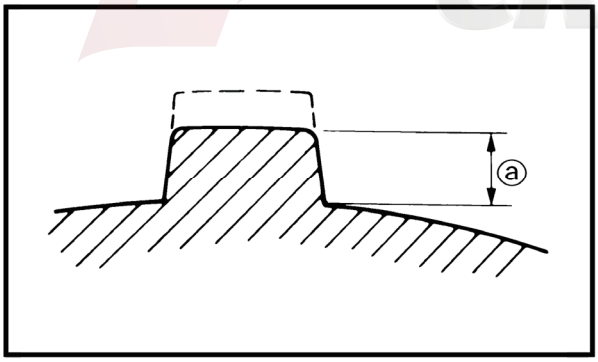

WARNING:

The profile depth falls below 3mm, Please replace the tyre immediately.

- tire wear limit ⓐ

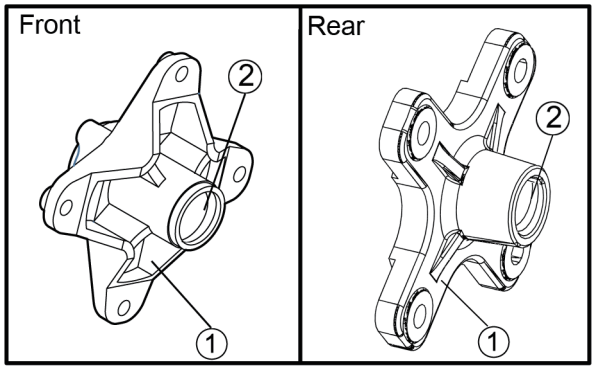

CHECKING THE WHEEL HUB

1. Check:
   - wheel hub ①
     Cracks/damage → Replace.
   - nuts (wheel hub)
     loosen or distorted → Replace or tighten

INSTALLING THE WHEEL HUB

1. Install:
   - axle nut

260 Nm (26.0 m · kg, 190 ft · lb)

INSTALLING THE WHEEL TYRE

1. Install:
   - wheel

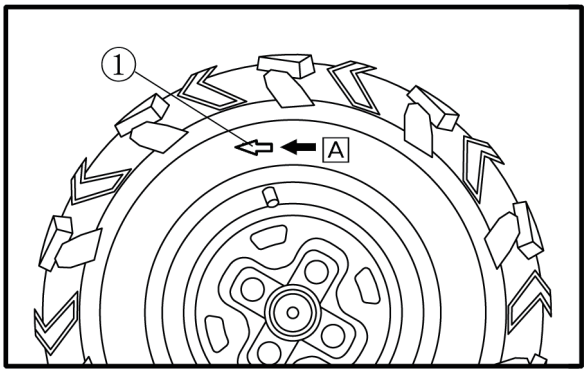

NOTE:

The arrow mark ① on the tyre must point in the direction of rotation A of the wheel.

2. Tighten:
   - wheel nuts ①

The angle of the conical bores is 60°

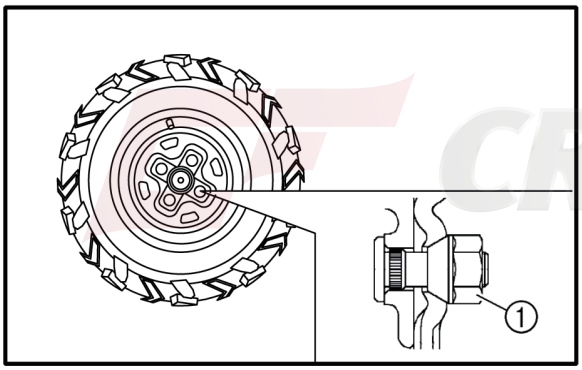

CROSSFIRE

WARNING:

Tapered wheel nuts ① are used for both the front and rear wheels. Install each nut

SPECIFICATION OF WHEEL AND TYRE

	Wheel hub Dimension	Tyre Dimension	Tyre Pressure（Kpa /PSI）
Front Wheel	10×5.0	22×7-10	49/7
Rear Wheel	10×8.0	22×10-10	49/7

• Since wheels and tyres are crucial to the vehicle operation, inspection for tyre pressure and profile depth is necessary.

• To ensure maximum security and longer life expectancy of the wheel, please periodically inspect the tyre pressure and profile depth. Insufficient tyre pressure can result in not only intensified wearing of the tyre but also instability during the course of operating the vehicle (such as hard turning). Excessive tyre pressure can also reduce the friction force between the tyre and ground, causing spinning or lose of control. Therefore, please ensure the tyre pressure strictly complies with figures shown in the chart above.

• Before operating the vehicle each time, please check if profile depth of the tyre is over worn, which might result in spinning, instability, lose of control and other potential security risk of the vehicle.

CROSSFIRE

Shift Operating System

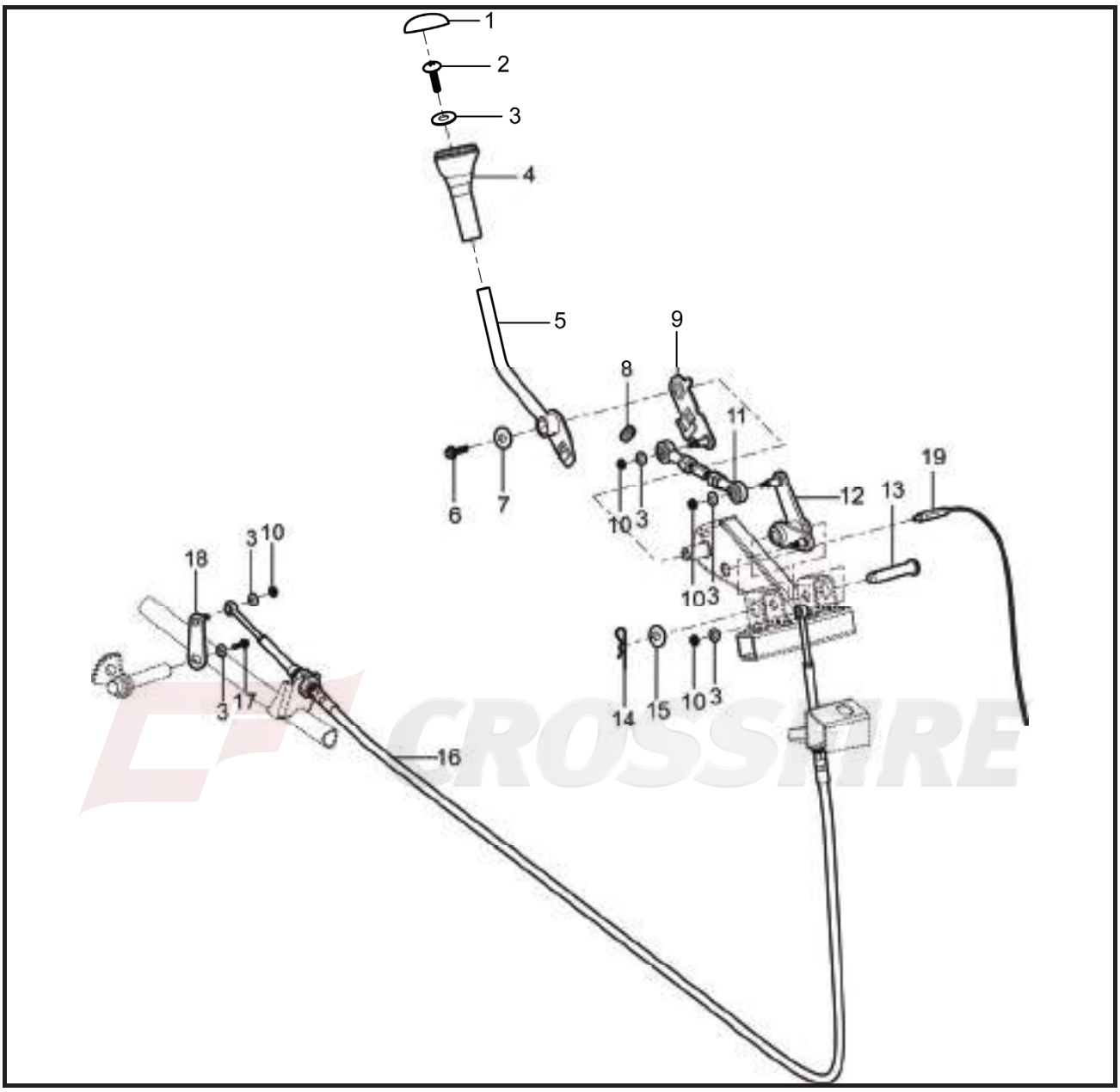

No.	Part Name	Qty	Remarks
	Removing the shift operating system		
1	Handle cover	1	
2	Hexagon Flange bolt M6×16	1	
3	Washer Φ6×Φ12×1.6	6	
4	Gearshift knob	1	
5	Gearshift arm assy Ⅰ	1	
6	Hexagon flange bolt M8×25	1	
7	Washer Φ6×Φ12×1.6	1	
8	Spring Ⅱ	1	

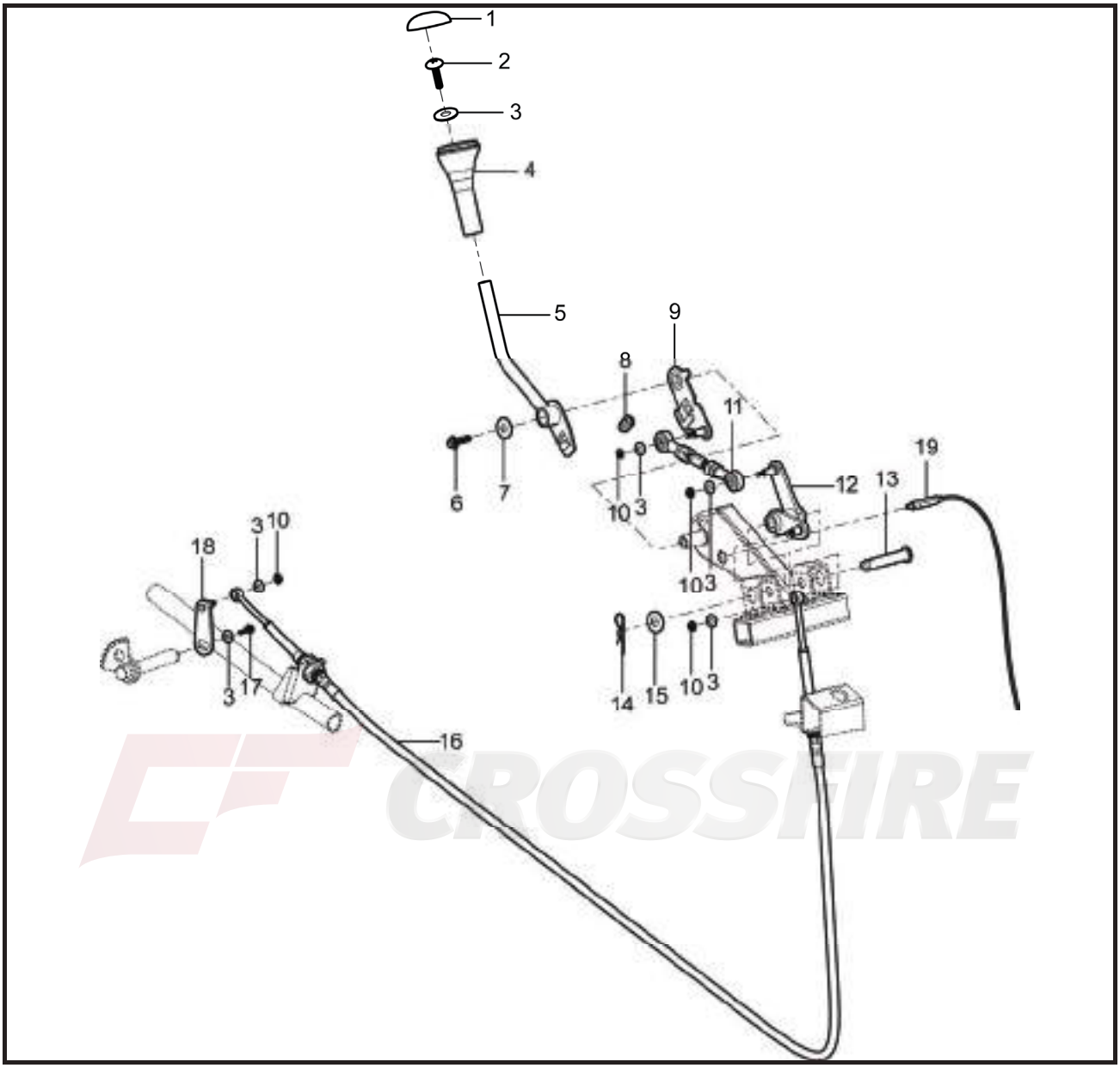

No.	Part Name	Qty	Remarks
9	Gearshift arm assy	1	
10	Hexagon flange bolt M6	4	
11	Gearshift rod	1	
12	Gearshift arm assy II	1	
13	Cargo switch Axis	1	
14	R type pin	1	
15	Washer Φ12×Φ24×2.5	1	
16	Shift cable combination	1	
17	Hexagon flange bolt	1	
18	Shift arm mechanism combination	1	
19	Reverse operation line com.	1	

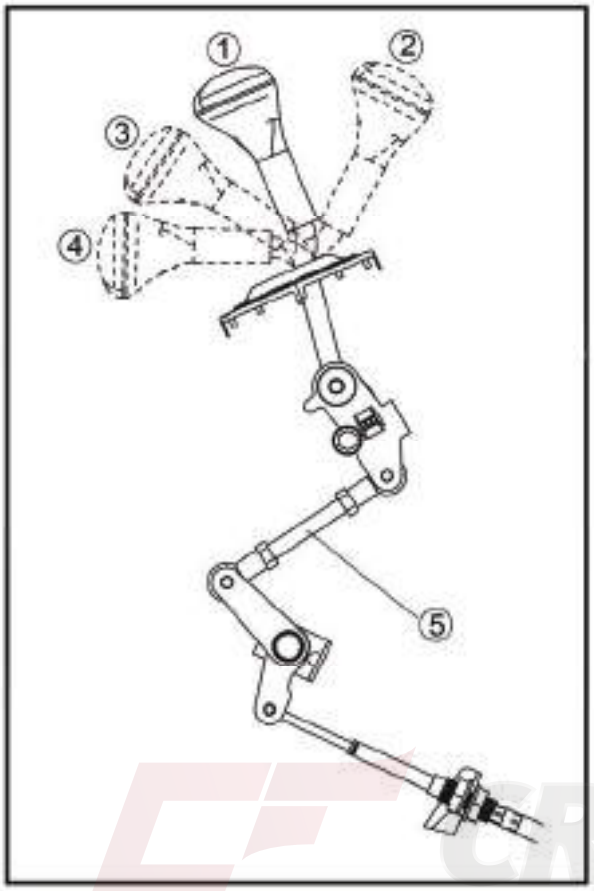

ADJUSTING REVERSE MECHANISM PARTS

① Neutral
②Reverse
③High
④Low
⑤Select lever shift rod

NOTE:

Before shifting, you must stop the vehicle and take your foot off the accelerator pedal. Otherwise, the transmission may be damaged.

CROSSFIRE

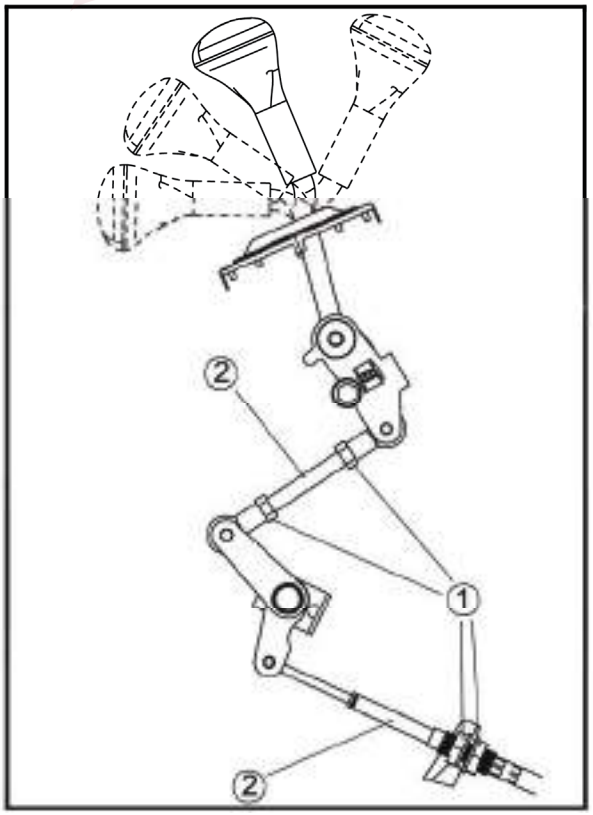

1. Adjust:
   • Select lever shift rod
   a. Make sure the select lever is in NEUTRAL.
   b. Loosen both in nuts ①.
   c. Adjust the shift rod length for smooth and correct shifting ②.
   d. Tighten the nuts ①.

Nut
23 Nm (2.3 m · kg, 17 ft · lb)

Reverse mechanism parts

CHECKING AND SERVICE OF REVERSE MECHANISM

1. Check the mobility of gear shift handle. If it is not working properly, remove the gear shift Mechanism to check if the fork , ball and spring is stuck., in which case replace the defective component and try again. The last way is to turn to the professional repairman.

2. If there is lack in the gear shift mechanism , adjust the nut of the fork to correct position and strengthen gear shift mechanism .

3. Remove the gear shift mechanism and check whether the linking rod is cracked; If so, it should be changed.

4. Check whether the bouncing spring of gear shift mechanism is intense enough.

5. Check whether the gear is engaged correctly and whether there are trip stop or lack. If these situation exists, call for the maintenance staff to test and repair it.

6. If the gear can not be engaged, we can test it from the following aspects:

- whether the clutch can completely declutch;
- whether the gearshift is greased reliable (whether the oil pipe of gear shift mechanism is blocked);
- whether gear shift mechanism jams; If these situation happens, maintenance staff would come to test and repair it.

CROSSFIRE

SUSPENSION

Front Swing Arm

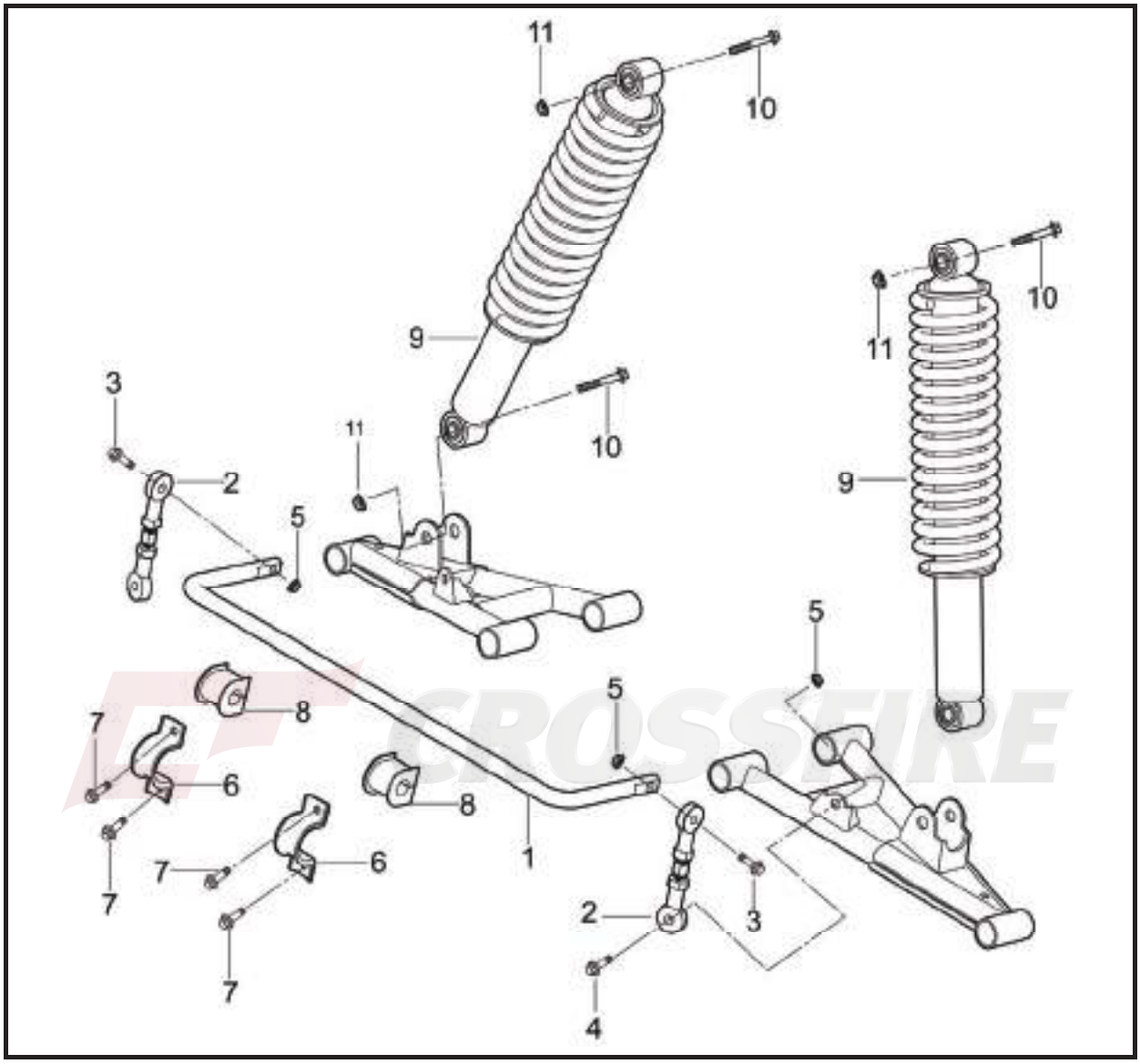

No.	Part Name	Qty	Remarks
	Removing the front swing arm		
1	Balance lever	1	
2	Tie rod assy., balance lever	2	
3	Hexagon flange bolt M8×1.25×35	2	
4	Hexagon flange bolt M8×1.25×30	2	
5	Hexagon flange nut M8×1.25	4	
6	Press board, anti-roller lever	2	
7	Hexagon flange bolt M8×1.25×20	4	
8	U-shaped rubber sleeve	2	

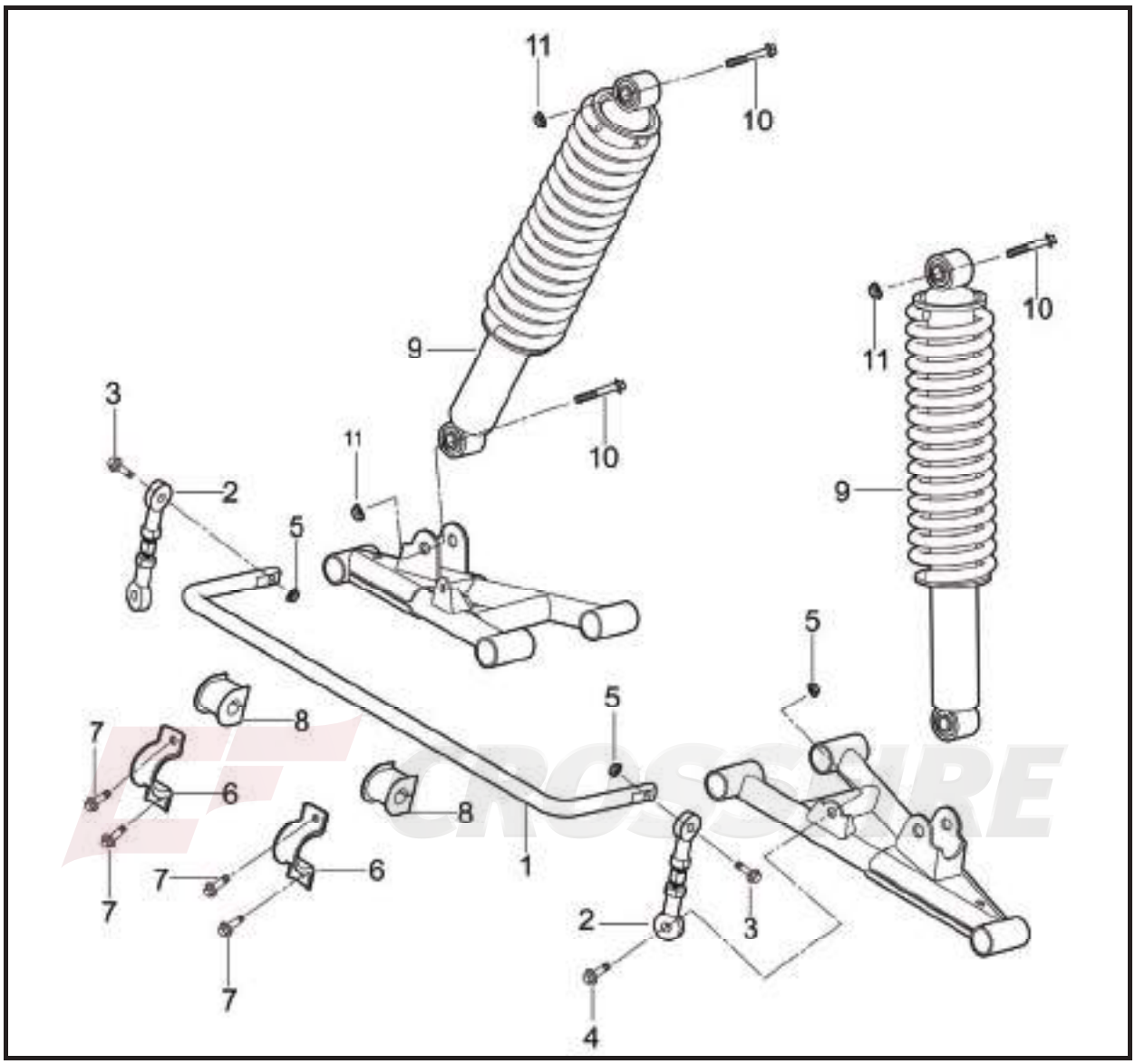

No.	Part Name	Qty	Remarks
9	Front shock absorber	2	
10	Bolt M10×1.25×50	4	
11	Hexagon flange locked nut M10×1.25	4	

Front Suspension

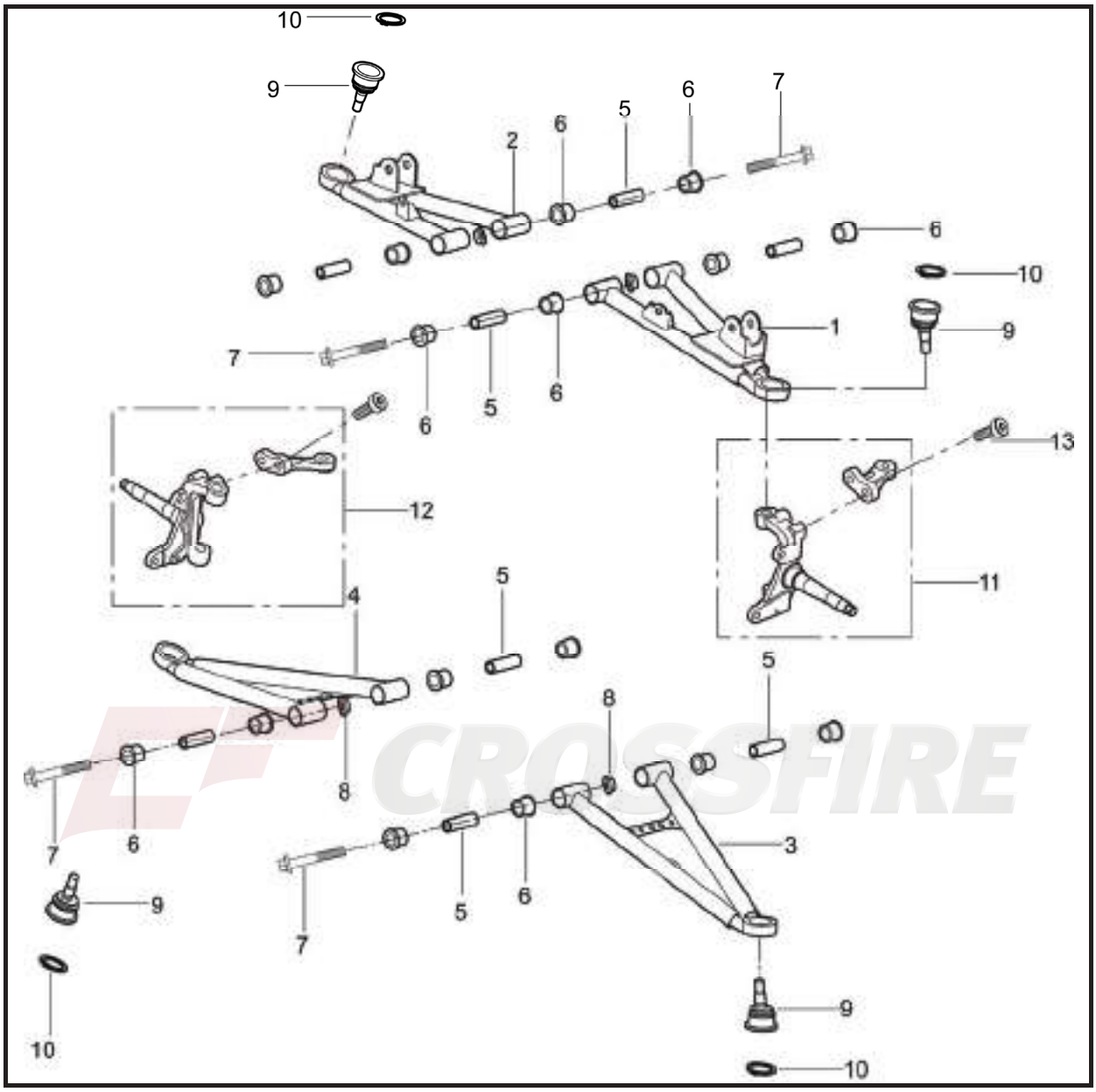

No.	Part Name	Qty	Remarks
	Removing the front suspension		
1	Front left upper swing arm	1	
2	Front right upper swing arm	1	
3	Front left lower swing arm	1	
4	Front right lower swing arm	1	
5	Front swing arm bushing	8	
6	Swing arm rubber sleeve	16	
7	Hexagon flange bolt M10×1.25×70	8	
8	Hexagon flange locked nut M10×1.25	8	

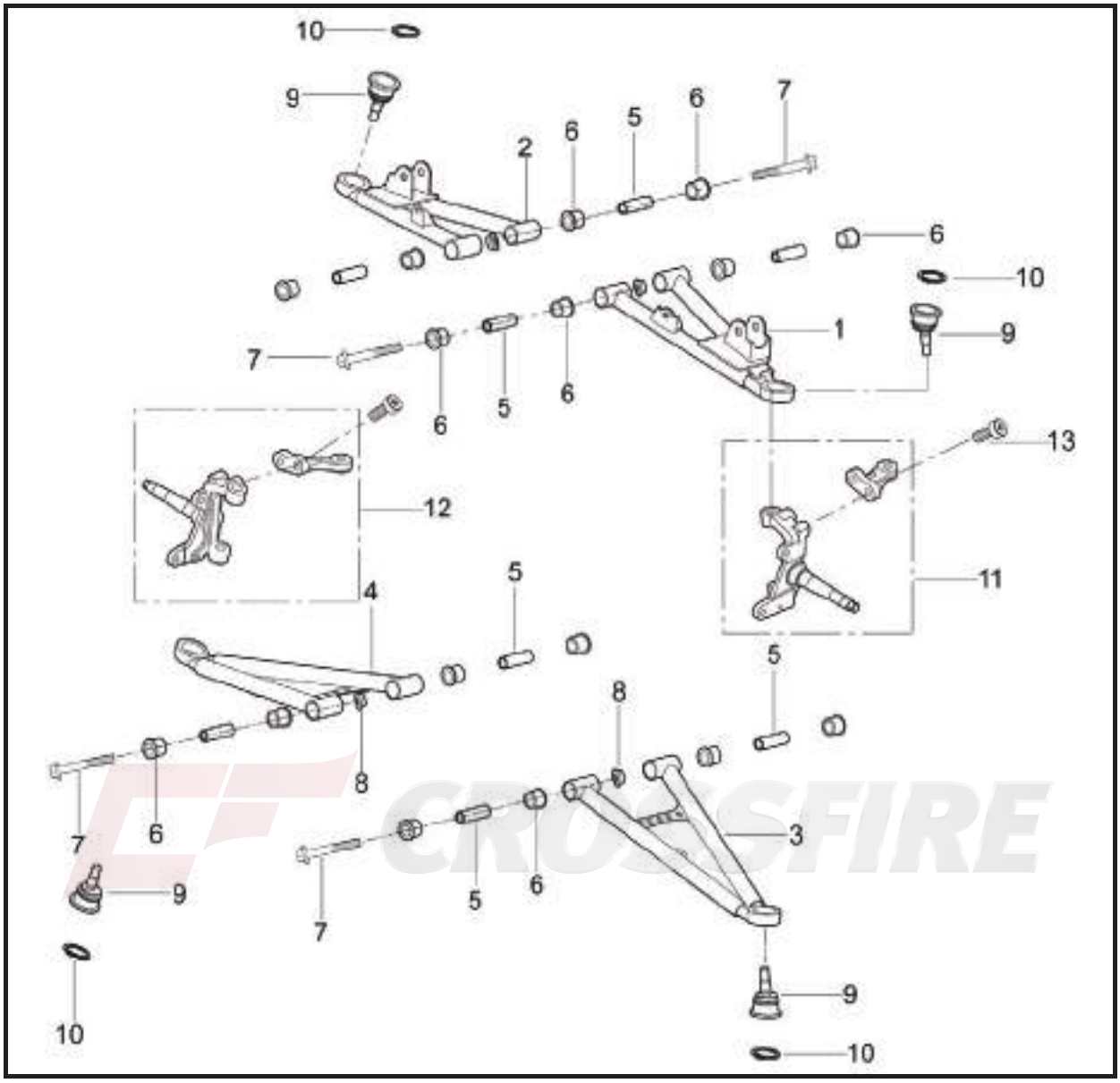

No.	Part Name	Qty	Remarks
9	Suspension of universal joint A	4	
10	Elasticity block ring d=30	4	
11	Front left steering knuckle assy.	1	
12	Front right steering knuckle assy.	1	
13	Socket hexagon screw M10×1.25×20	2	

Front Suspension and arm

DISASSEMBLING, SERVICE AND ASSEMBLY THE SUPPORTING ROCKER PARTS

1. Disassembling and Service

In the suspension, there is easy to appear the problem with bushing, cotter pin and shock absorber.

•If the left and right rocker rocks fiercely, check the few aspect, whether the bushing of the rocker is crushed, the middle rubber separate is aging and chapped.

•check whether the cotter pin is credible, if it is not instead the same spec cotter pin.

• The problem with the shock absorber and maintain method, whether it can returns to the position under the pressure and the torsional spring is rupture. If it is rupture or nearly to rupture, instead the shock absorber. whether it leak oil, if so instead the same spec shock absorber. According to the different request, if there is a oil cup on the rocker, must check it whether complete and refuels.

2. Install:

Mount fore L/R damper, up-and-down rocker arm assembly onto the frame with flange bolt and nuts self-locking to ensure a torque of 40 ~ 45Nm.

CAUTION:

•These components should be greased with butter before assembly.

•The surface of components can not be cracked.

CROSSFIRE

Front Suspension and arm

•Check whether these components are greased with butter and then tighten the up-and-down rocker arm assembly and L/R fore dampers and the components. Fix the L/R tension rods into hole by way of the trough of open-groove nut with cotter pin, and make these tension rods bisection on feet.

CHECKING THE BALANCE LEVER

1. Check:
• Balance lever
Bends/cracks/damage → Replace.

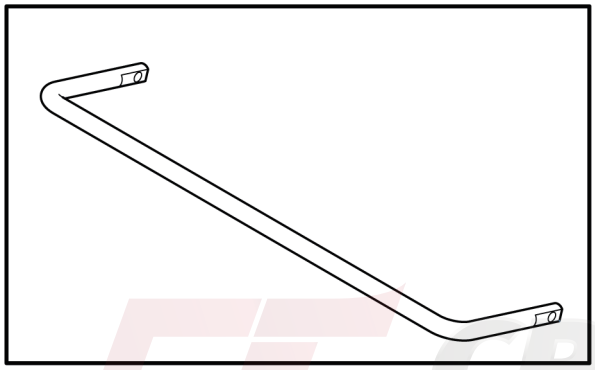

CROSSFIRE

CHECKING THE FRONT ARMS

1. Check:
• front arms
Bends/damage → Replace.
2. Check:
• bushing
Wear/damage → Replace.
3. Check:
• Axle sleeve, liner
Damage/pitting → Replace the axle sleeve, liner
Free play → Replace the axle sleeve, liner
Turns roughly → Replace the axle sleeve, liner

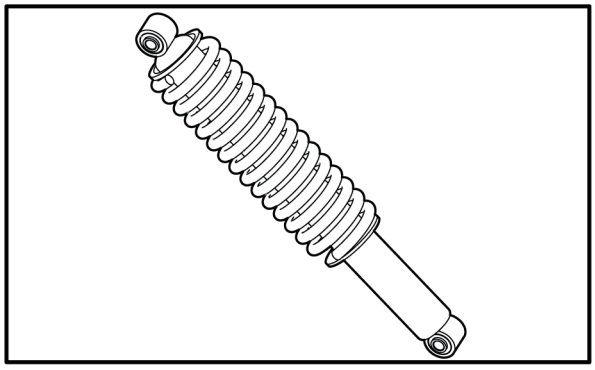

CHECKING THE FRONT SHOCK ABSORBER

1. Check:
   - shock absorber rod
     Bends/damage → Replace the shock absorber assembly.
   - shock absorber assembly
     Oil leaks → Replace the shock absorber assembly.
   - spring
     Fatigue → Replace the shock absorber assembly.

     Move the spring up and down.

CROSSFIRE

Front Suspension and arm

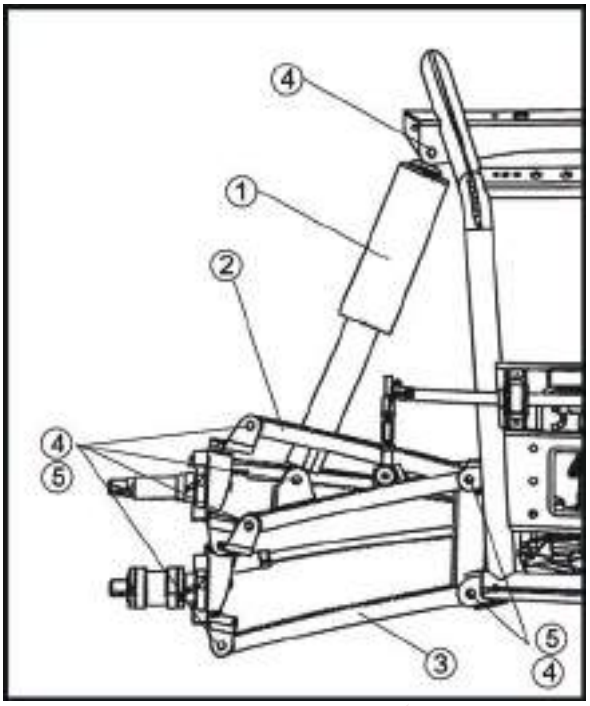

INSTALLING THE FRONT ARMS AND FRONT SHOCK ABSORBER

1. Install:
   - front arms
   - front shock absorber

a. Install the front upper arm ② and front lower arm ③.

NOTE:

- **Lubricate the bolts ④ with lithium-soap-based grease.**
- **Be sure to position the bolts ④ so that the bolt head faces inward.**
- **Temporarily tighten the nuts ⑤.**

b. Install the front shock absorber ①.

Nut ⑤
45 Nm (4.5 m · kg, 32 ft · lb)

c. Install the front knuckle.

Nut ⑤
45 Nm (4.5 m · kg, 32 ft · lb)

d. Tighten the nuts ⑤.

Nut ⑤
45 Nm (4.5 m · kg,32 ft · lb)

CROSSFIRE

Rear Swing Arm Assy.

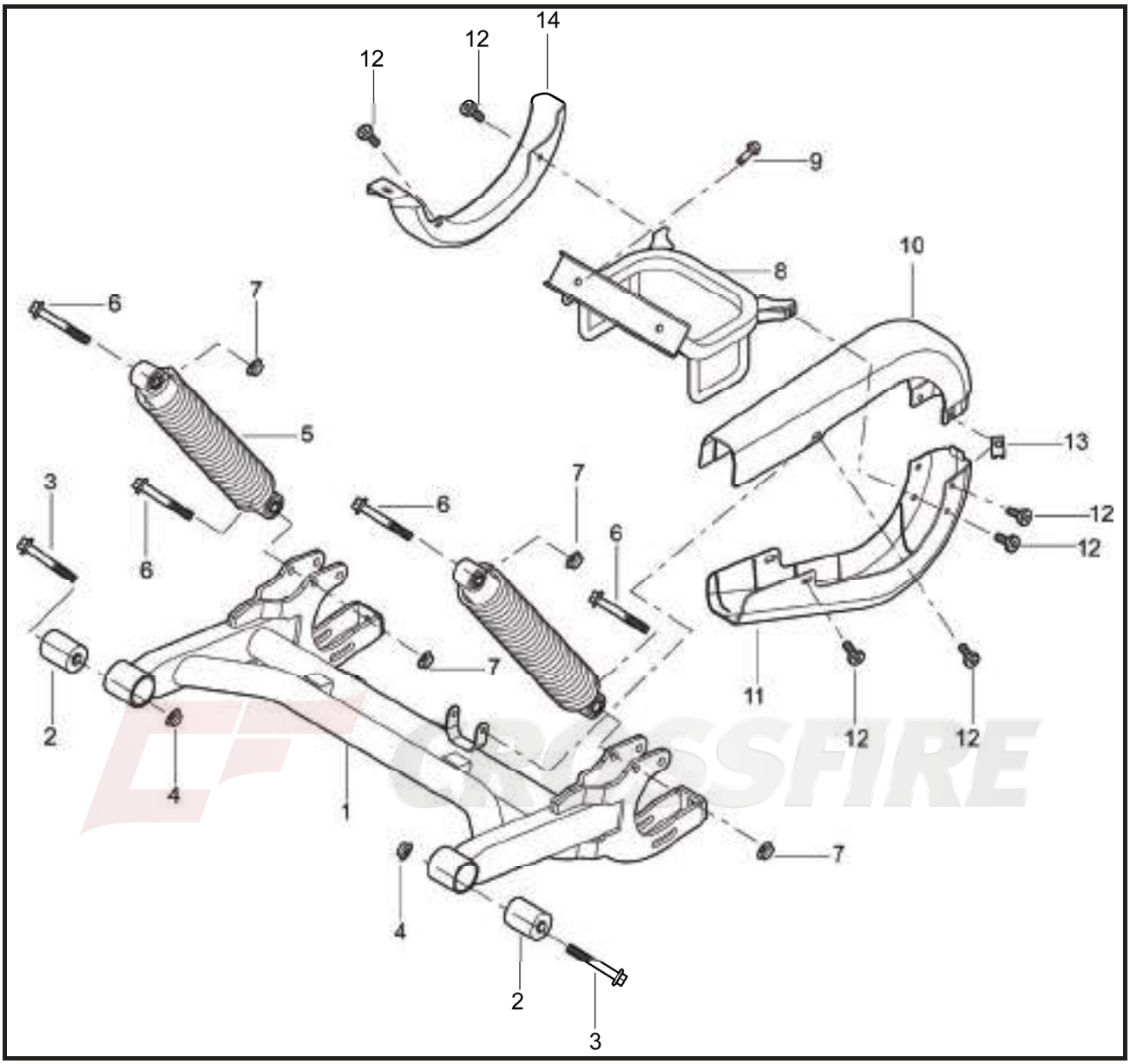

No.	Part Name	Qty	Remarks
	Removing the rear swing arm assy.		
1	Rear suspension assy	1	
2	Rear suspension bushing	2	
3	Hexagon flange bolt M12×1.25×75	2	
4	Hexagon flange self-lock nuts M12×1.25	2	
5	Rear shock absorber	2	
6	Hexagon flange bolt M10×1.25×60	4	
7	Hexagon flange self-lock nuts M10×1.25	4	
8	Sprocket cover bracket welded assy	1	
9	Hexagon flange bolt M8×1.25×20	3	
10	Chain protecing bush Ⅰ	3	

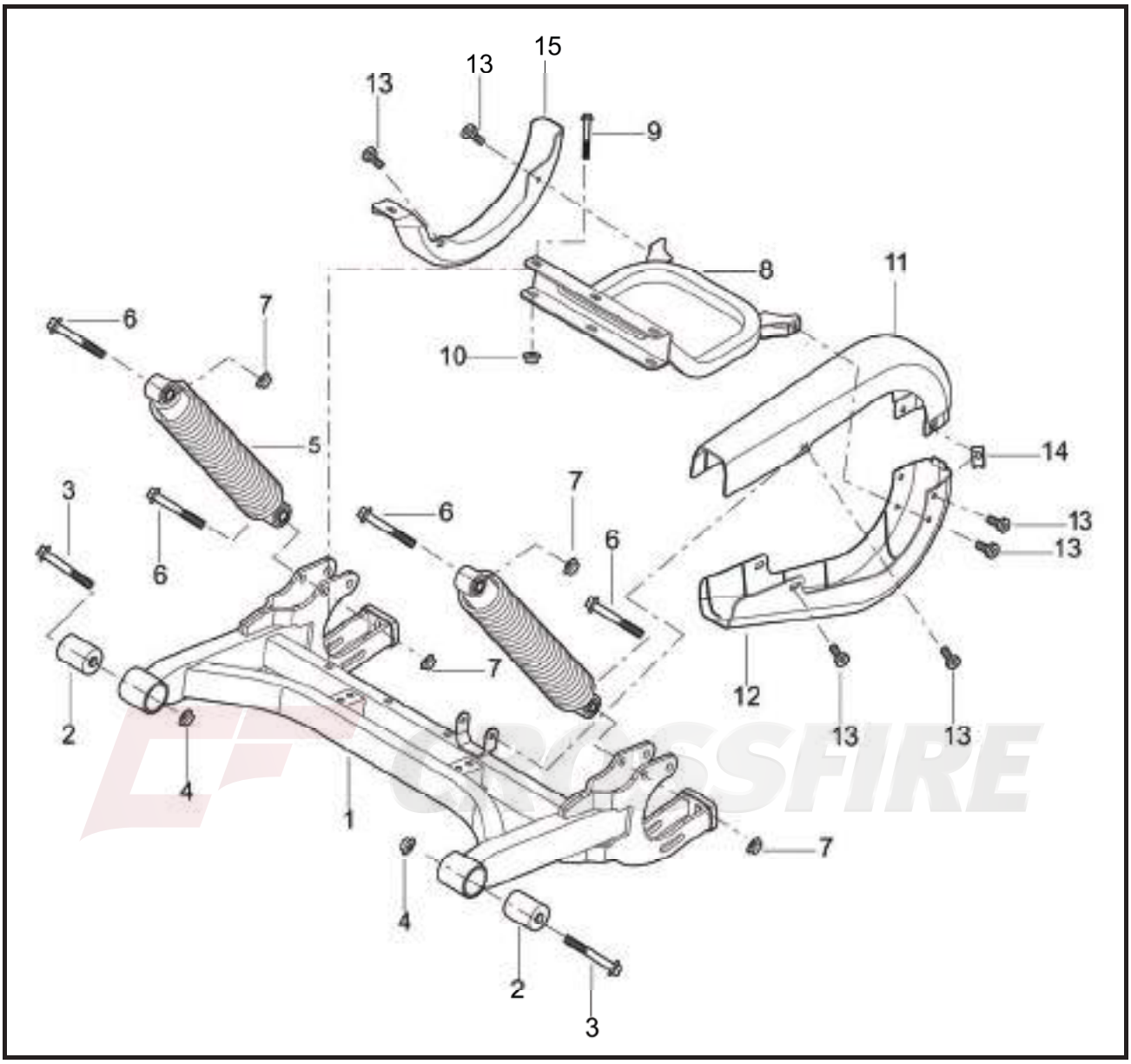

No.	Part Name	Qty	Remarks
11	Chain protecing bush Ⅱ	1	
12	Inner six angle screw	1	
13	Screw thread clip M6×2	9	
14	Parking disc cover	1	

CHECKING AND SERVICE OF REAR SUSPENSION

1. It is similar to the front suspension ,Check if there exists any distortion or crack on the install axis of the shock absorber in which case it must be replaced.
2. Inspect the rocker bushing and the middle rubber separate is integrant.(According to the front Suspension)
3. The cotter pin on the head of the install axis which in the rear shock absorber whether is credible.

NOTE:

After disassemble the rear shock absorber, check if there exists any distortion or crack on the frame connection hole and the rear shock absorber, if so, inform the special serviceman to inspect and service first or install the rear shock absorber on the frame after instead.(Attention, the bolts must be the special self-lock nut, the fastening torque must be 45-55Nm)

CROSSFIRE

Rear swing arm assy.

CHECKING Rear Swing arm

1. Check:
   - rear swing arm assy.
     Damage/pitting → Replace
2. Check:
   - rear shock absorber parts
     Bends/damage → Replace.
3. Check:
   - Rear swing arm bushing
     Wear/damage → Replace.

CROSSFIRE

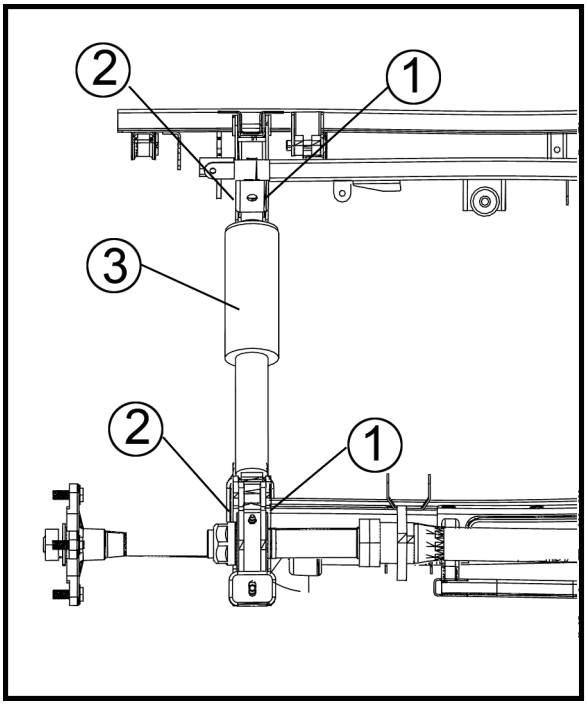

INSTALLING THE REAR SWING ARM ASSY.

1. Install:
   - Rear swing arm
   - Rear shock absorber parts

a. All components installed on the rear axle.

NOTE:

- **Lubricate the bolts ①with lithium-soap-based grease.**
- **Be sure to position the bolts ①so that the bolt head faces outward.**
- **Temporarily tighten the nuts ②.**

b. Install the rear shock absorber ③.

Nut ②
45 Nm (4.5 m · kg, 32 ft · lb)

CROSSFIRE

COOLING SYSTEM

Water Radiator

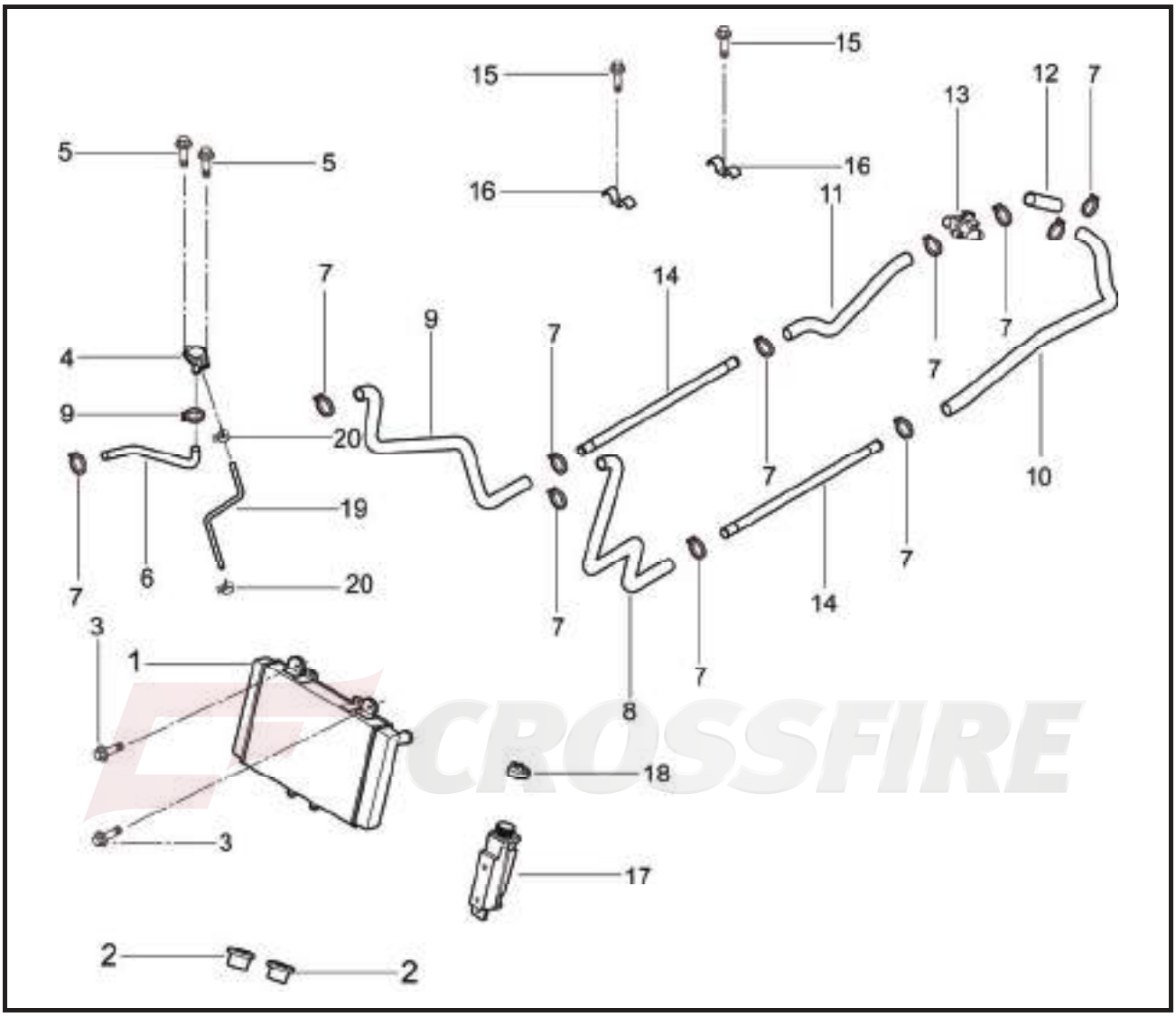

No.	Part Name	Qty	Remarks
	Removing the radiator		
1	Water tank	1	
2	Rubber cushion,water tank	2	
3	Hexagon flange self-locked bolt M6×20	2	
4	Water inlet assy	1	
5	Hexagon flange bolt M6×16	2	
6	Rubber filler	1	
7	Screw clip Φ20×32	12	
8	Front left water pipe	1	
9	Front right water pipe	1	
10	Rear left water pipe	1	
11	Rear right water pipe	1	

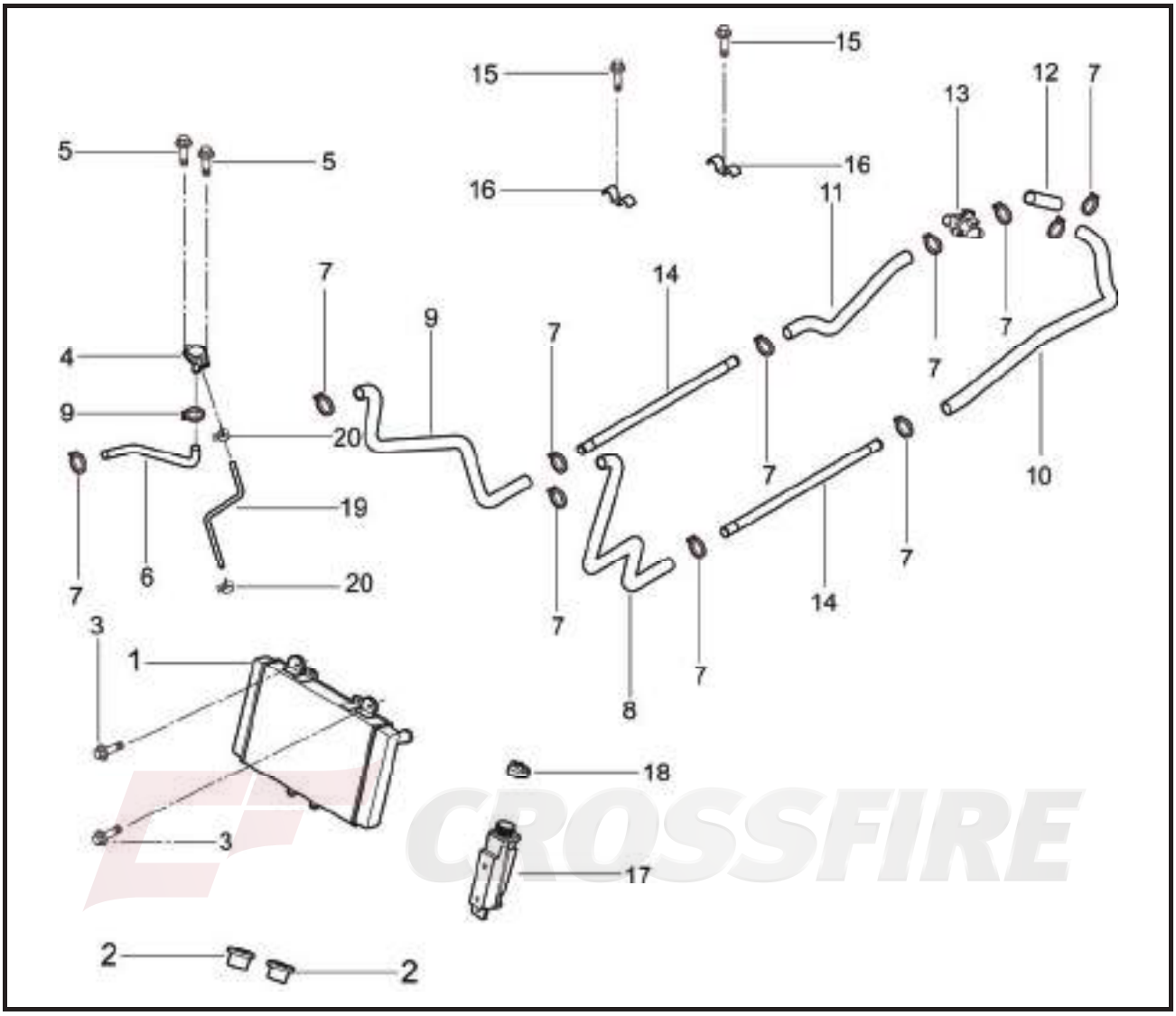

No.	Part Name	Qty	Remarks
12	Rear water pipe II	1	
13	Thermostat parts	1	
14	Metal water pipe	2	
15	Hexagon flange bolt M6×16	2	
16	Water pipe clip	2	
17	Secondary water tank	1	
18	Secondary water tank cover	1	
19	Rubber pipe	1	
20	Clamp Φ9	2	

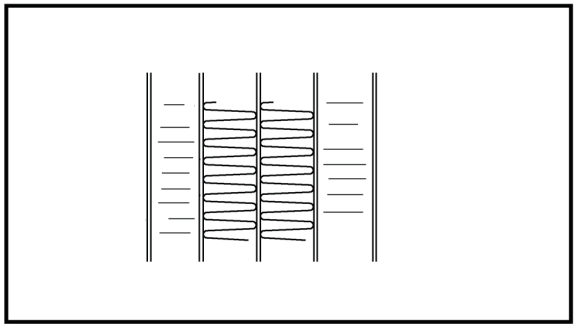

CHECKING THE RADIATOR

1. Check:
• radiator fins
Obstruction → Clean.
Apply compressed air to the rear of the radiator
Damage → Repair or replace.

NOTE:

Straighten any flattened fins with a thin, flat-head screwdriver.

2. Check:
• all rubber hose
Cracks/damage → Replace.
3. Check:
• Bolt clip
the tightness of Bolt clip. If loosen, please have the hoop tightened immediately.
4. Check:
• radiator fan
Damage → Replace.
Malfunction → Check and repair.

CROSSFIRE

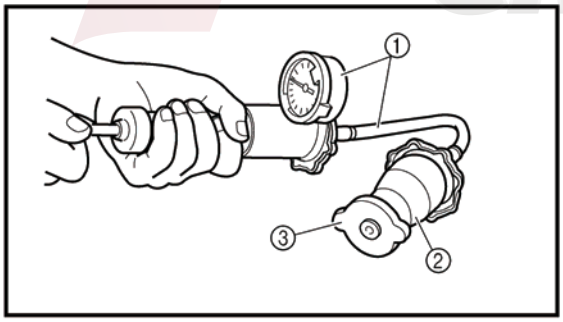

5. Measure:
• radiator cap opening pressure
Below the specified pressure → Replace the radiator cap.

Radiator cap opening pressure
107.9 ~ 137.3 KPa
(1.079 ~ 1.373 kg/cm^2, 15.35 ~ 19.53 psi)

a. Install the radiator cap tester ① and adapter ② onto the radiator cap ③.
b. Apply the specified pressure for ten sec-onds and make sure that there is no drop inpressure.

INSTALLING THE RADIATOR

1. Fill:

• cooling system

Start engine when pour full the refrigerating fluid, loose the exhaust nut on the pipe, the water level will get lower at this time, Supply the refrigerating fluid until the water level stop to change, then screw the exhaust nut, cover the water tank lid. The water tank inspection is finished. .

2. Check:

• cooling system

Leaks → Repair or replace any faulty part.

CROSSFIRE

SEAT

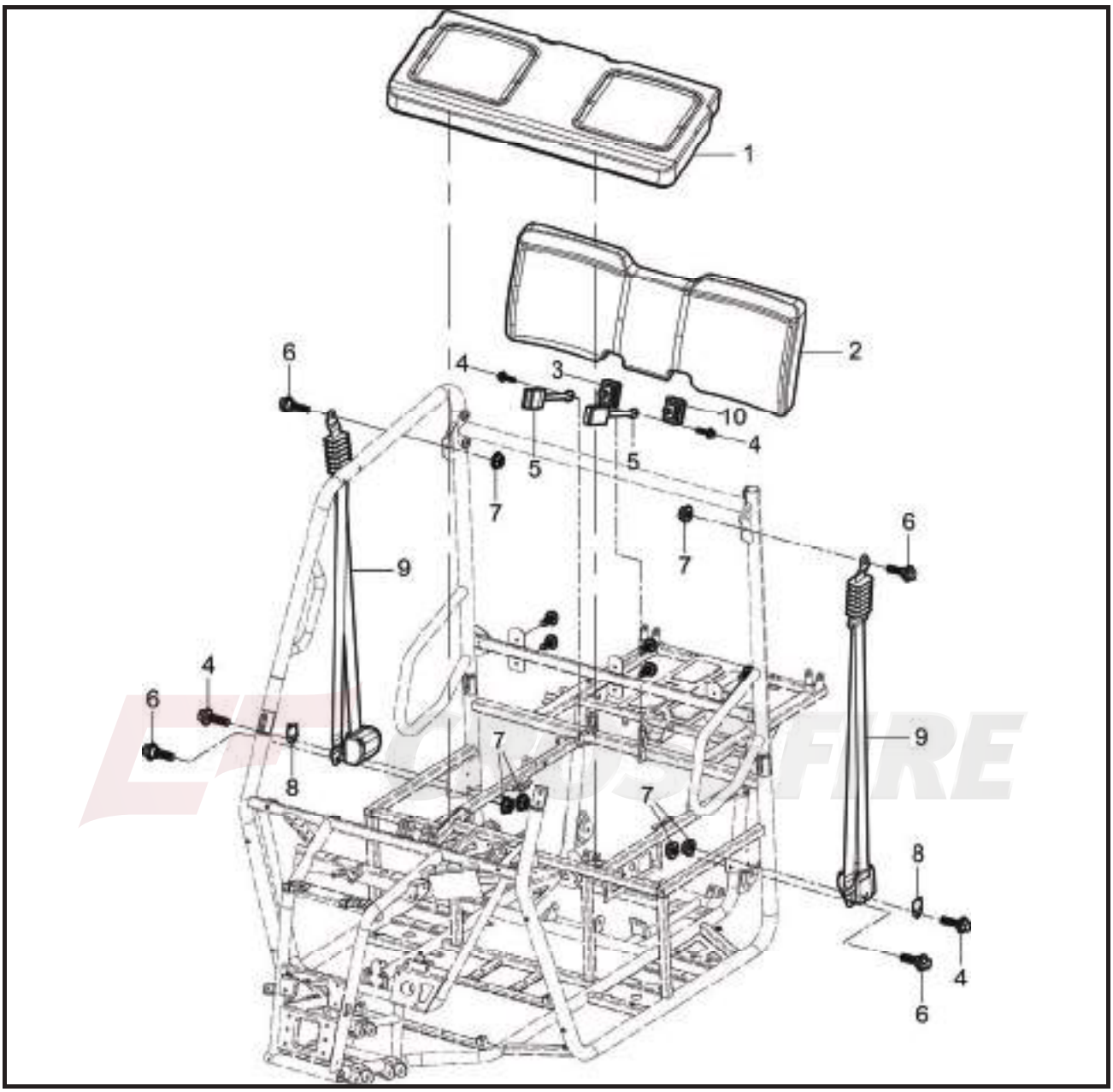

No.	Part Name	Qty	Remarks
	Removing the seat		
1	Seat cushion com.	1	
2	Back rest	1	
3	Insulating rubber sleeve(L)	1	
4	Hexagon bolt M10×1.25×20	4	
5	Safety belt lock com.	2	
6	Hexagon bolt M10×1.25×20-Φ14×5	4	
7	Hexagon flange bolt M10×1.25	6	
8	Seat belt spacing plate	2	
9	Seat belt com.	2	
10	Insulating rubber sleeve(R)	1	

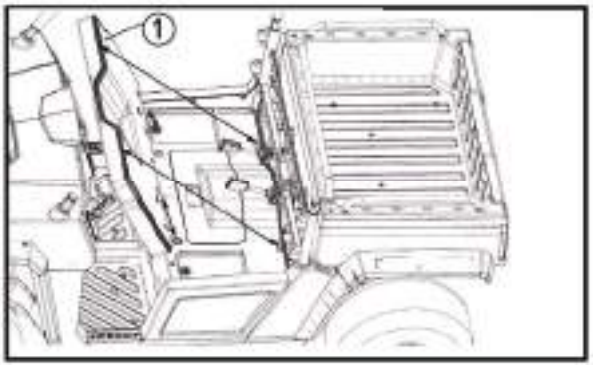

DISASSEMBLING THE SEAT

Remove:

• Driver seat ①

To open the seat, raise the seat to the forward position.

CAUTION:

·These components should be greased with butter before assembly.

·The surface of components can not be cracked.

CROSSFIRE

FUEL TANK

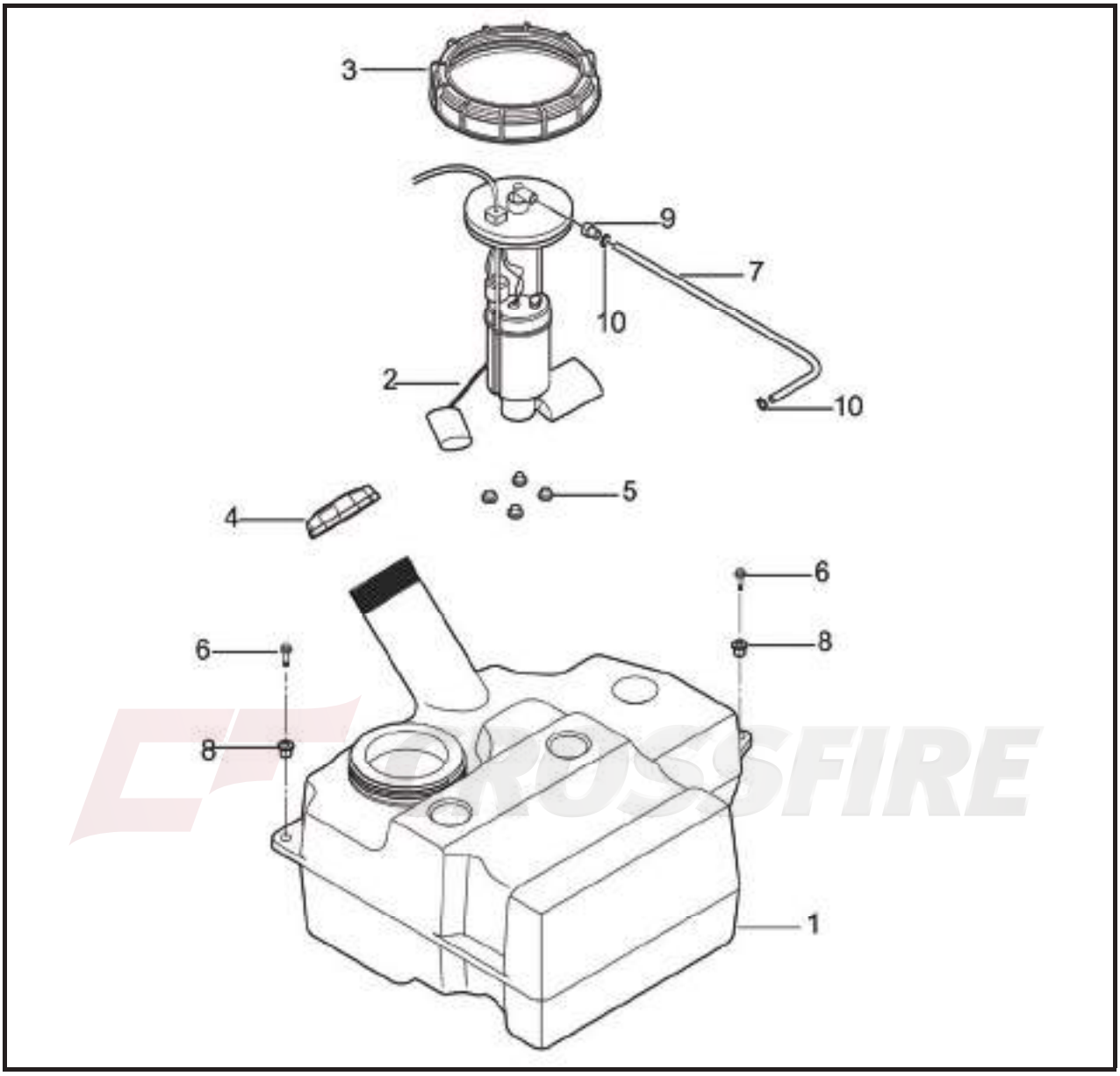

No.	Part Name	Qty	Remarks
	Removing the fuel tank		
1	Fuel tank	1	
2	Fuel pump assy	1	
3	Cover, fuel pump(EFI engine)	1	
4	Fuel Tank cap	1	
5	Rubber cusion VIII	4	
6	Hexagon flange self-locked bolt M6×20	2	
7	High pressure fuel pipe L=250 Φ14×Φ17×250	1	
8	Plug for fuel outlet	3	
9	Output oil plug	1	
10	Clamp	2	

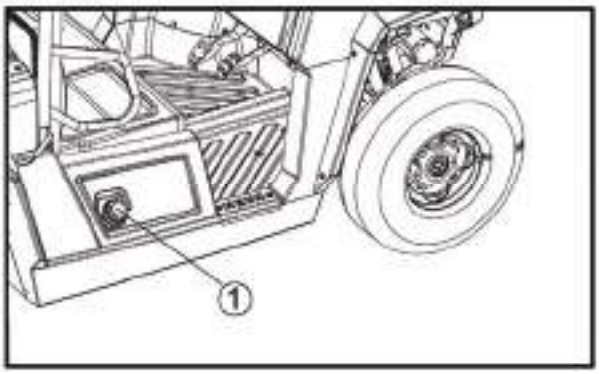

• Fuel tank cap

Remove the fuel tank cap by turning it counterclockwise.

Fill fuel tank when fuel gauge shows1/4 or less fuel in tank.

CAUTION:

- **Do not smoke while refueling.**
- **Be sure to stop the engine before refueling.**

CROSSFIRE

ELECTRICAL SYSTEM MALFUNCTION INSPECTION

S/N	Phenomenon	Measure
1	Abnormal lights	1、 Check whether switches normal.
		2、 Check whether cables damaged.
		3、 Check whether lights damaged.
2	Fail to electric start	1、 Check whether battery undercharge.
		2、 Check whether starting motor damaged.
		3、 Check whether EFI damaged.
		4、 Check whether ignition coil normal.
		5、 Check whether spark plug fouling or ablative.
		6、 Check whether crankshaft speedmeter magneto ignition signal normal.
		7、 Check whether ECU plugged or damaged.
		8、 Check whether air filter plugged.
		9、 Check whether oil circuit smooth.
3	Abnormal speed indication between meter and mileage.	1、 Check whether speedmeter damaged.
		2、 Check whether meter damaged.
		3、 Check whether speedmeter surface polluted by iron scrap,
4	Neutral indicator of meter is not bright	1、 Check whether neutral switch damaged.
		2、 Check whether meter damaged.
		3、 Check whether cable damaged.
5	Reverse indicator of meter is not bright	1、 Check whether reverse switch damaged.
		2、 Check whether meter damaged.
		3、 Check whether cable damaged.
6	Other indicators of meter are not bright	1、Check whether meter damaged
		2、Check whether cable damaged.
		3、Check whether sensor or switch damaged.
7	Ignition switch can not shut off	1、 .Check whether switch damaged.
		2、 Check whether cable damaged.
		3、 Check whether ECU damaged.

CROSSFIRE

ELECTRICAL

ELECTRICALCOMPONENTS

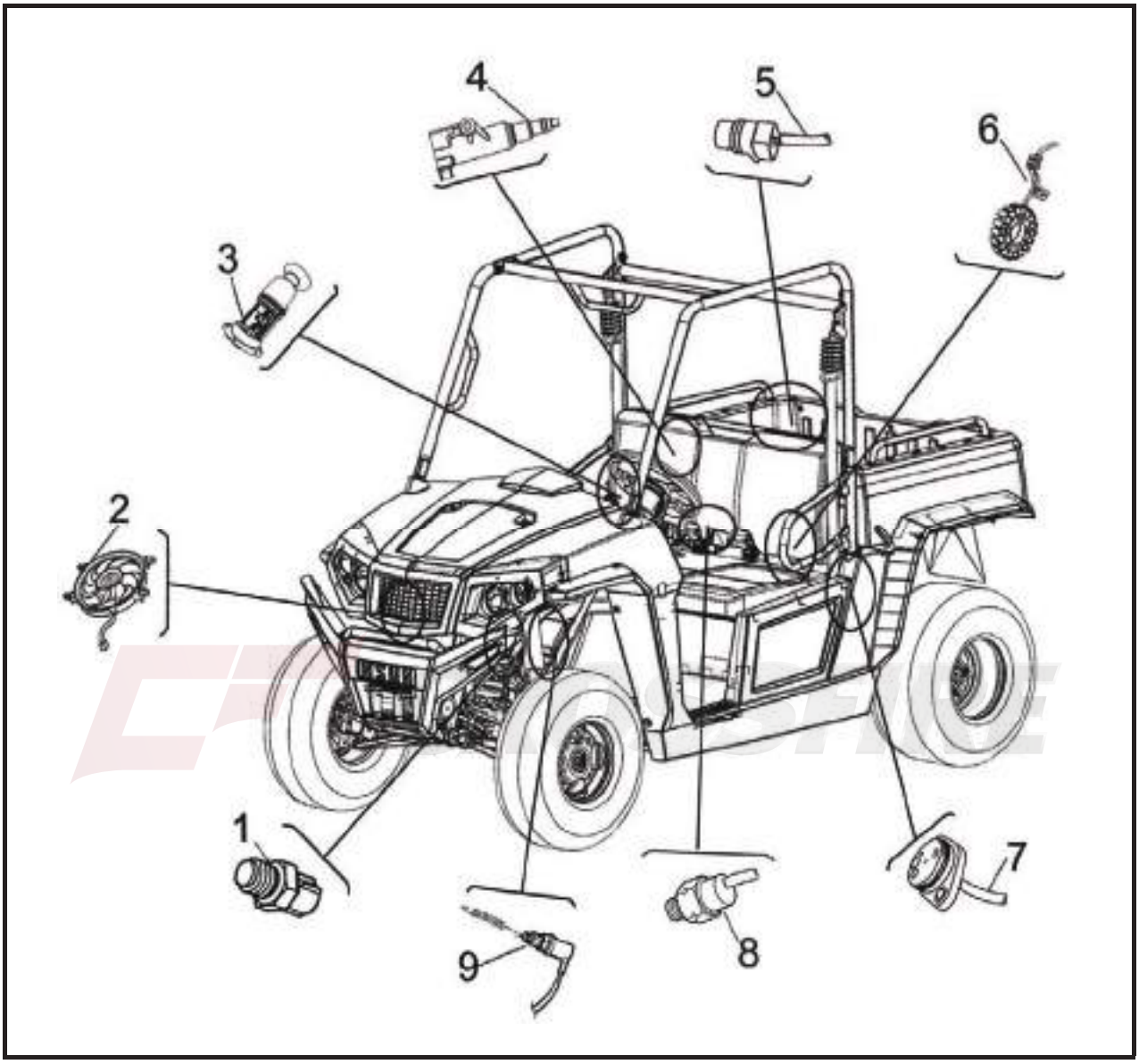

1. Thermo switch 1
2. Radiator fan
3. Fuel pump
4. Ignition coil
5. Speed sensor
6. stator assembly
7. Gear position switch
8. Thermo switch2
9. Brake light switch

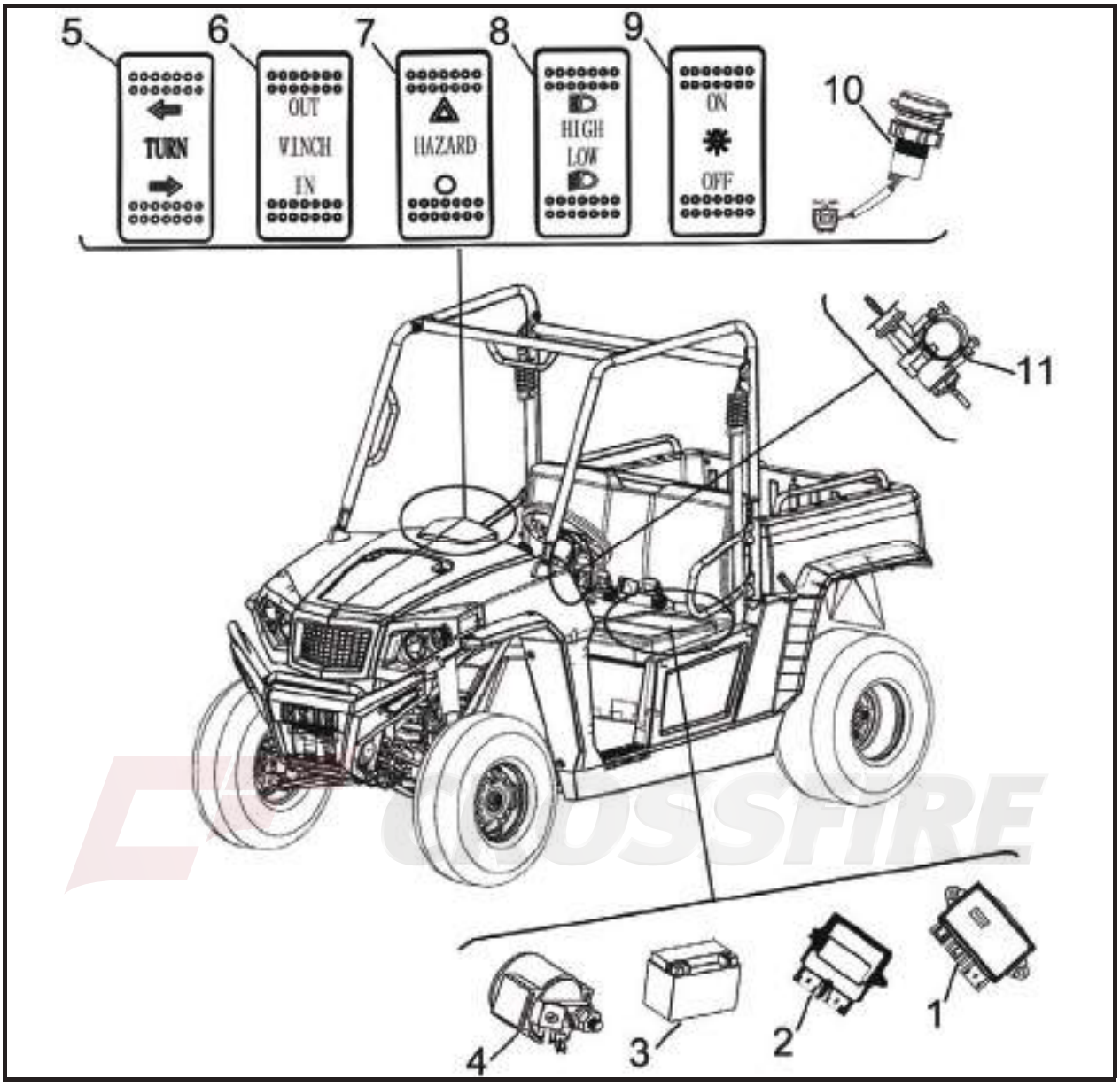

1. Relay assy.
2. ECU unit
3. Battery
4. Starter relay
5. Turning light switch
6. Windlass controler switch
7. Emergency lamp switch
8. Low (hight beam) convert switch
9. Light switch assy.
10. DC socket assy.
11. Main switch