CROSSFIRE

400GT

SERVICE MANUAL

CROSSFIRE

NOTICE

This manual was produced by the Linhai Group primarily for use by Linhai dealers and their qualified mechanics. It is not possible to include all the knowledge of a mechanic in one manual, so it is assumed that anyone who uses this book to perform maintenance and repairs on Linhai vehicle has a basic understanding of the mechanical ideas and the procedures of vehicle repair. Repairs attempted by anyone without this knowledge are likely to render the vehicle unsafe and unfit for use.

Linhai Group is continually striving to improve all its models. Modifications and significant changes in specifications or procedures will be forwarded to all authorized Linhai dealers and will appear in future editions of this manual where applicable.

NOTE:
Designs and specifications are subject to change without notice.

IMPORTANT INFORMATION

Particularly important information is distinguished in this manual by the following notations.

⚠ The Safety Alert Symbol means ATTENTION! BECOME ALERT! YOUR SAFETY IS INVOLVED!

⚠ WARNING Failure to follow WARNING instructions could result in severe injury or death to the vehicle operator, passenger, a bystander, or a person checking or repairing the vehicle.

CAUTION: A CAUTION indicates special precautions that must be taken to avoid damage to the vehicle.

NOTE: A NOTE provides key information to make procedures easier or clearer.

CONTENTS

⚠ WARNING

Never run an engine in an enclosed area. Carbon monoxide exhaust gas is poisonous and can cause severe injury or death. Always start engines outdoors.

Gasoline is extremely flammable and explosive under certain conditions. Battery electrolyte is poisonous. It contains sulfuric acid. Serious burns can result from contact with skin, eyes or clothing. Always keep alert and wear protection.

Exhaust system components are very hot during and after use of UTV. Never service when the engine is warm or hot. Escaping steam from cooling system or hot oil from the machine can cause severe burns. The engine must be cool before service.

Crate of the UTV and parts in the UTV maybe have sharp edge, always pay attention and wear protection.

CHAPTER 1 GENERAL INFORMATION

⚠ WARNING

The parts of different types/ variants/ versions maybe un-interchangeable, even some parts have almost same appearance. Always refer to Parts Manual of each UTV model for spare parts information and service.

1.1 IMPORTANT INFORMATION

PREPARATION FOR REMOVAL PROCEDURES

1. Remove all dirt, mud, dust and foreign material before removal and disassembly.
2. Use proper tools and cleaning equipment.
3. When disassembling the machine, always keep mated parts together. This includes gears, cylinders, pistons and other parts that have been ”mated ”through normal wear. Mated part must always be reused or replaced as an assembly.
4. During machine disassembly, clean all parts and place them in trays in the order of disassembly. This will speed up assembly and allow for the correct installation of all parts.
5. Keep all parts away from any source of fire.

REPLACEMENT PARTS

Use only genuine parts for all replacements. Use recommended oil and grease for all lubrication jobs. Other brands may be similar in function and appearance, but inferior in quality.

GASKETS,OIL SEALS AND O-RINGS

1. Replace all gaskets seals and O-rings when overhauling the engine. All gasket surfaces, oil seal lips and O-rings must be cleaned.
2. Properly oil all mating parts and bearings during reassembly. Apply grease to the oil seal lips.

LOCK WASHERS/PLATES AND COTTER PINS

Replace all lock washers/plates and cotter pins after removal. Bend lock tabs along the bolt or nut flats after the bolt or nut has been tightened to specification.

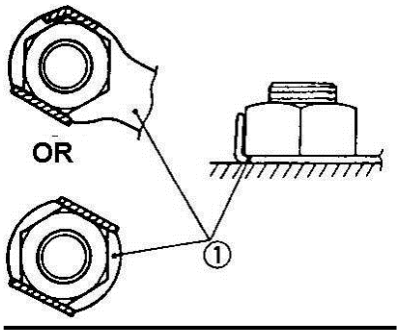

BEARINGS AND OIL SEALS

Install bearings and oil seals so that the manufacturer’s marks or numbers are visible. When installing oil seals, apply a light coating of lightweight lithium base grease to the seal lips. Oil bearings liberally when installing, if appropriate.

① oil seal

CAUTION:

Do not use compressed air to spin the bearings dry. This will damage the bearing surfaces.

① Bearing

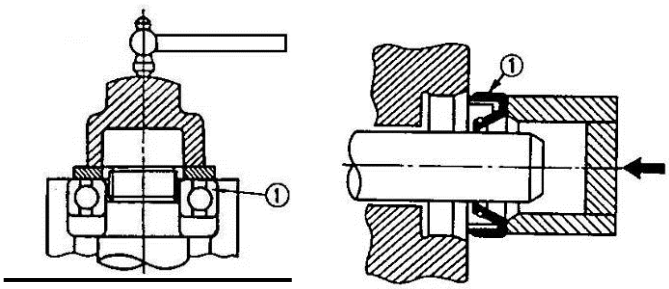

CIRCLIPS

1. Check all circlips carefully before reassembly. Always replace piston pin clips after one use. Replace distorted circlips. When installing a circlip ①, make sure that the sharp-edged corner ② is positioned opposite the thrust ③ it receives. See sectional view ④Shaft.

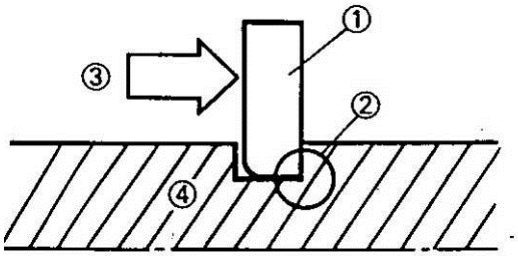

CHECKING OF CONNECTIONS

Dealing with stains, rust, moisture, etc. on the connector.

1. Disconnect:
   - ●Connector
2. Dry each terminal with an air blower.
3. Connect and disconnect the connector two or three.
4. Pull the lead to check that it will not come off.
5. If the terminal comes off, bend up the pin ① and reinsert the terminal into the connector.
6. Connect:
   - ● Connector

NOTE:

The two connectors ” click ” together.

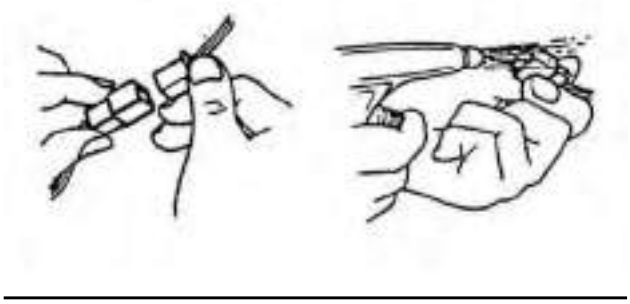

7. Check for continuity with a tester.

NOTE:

- ● If there is no continuity, clean the terminals.
- ● Be sure to perform the steps 1 to 7 listed above when checking the wire harness.
- ● Use the tester on the connector as shown.

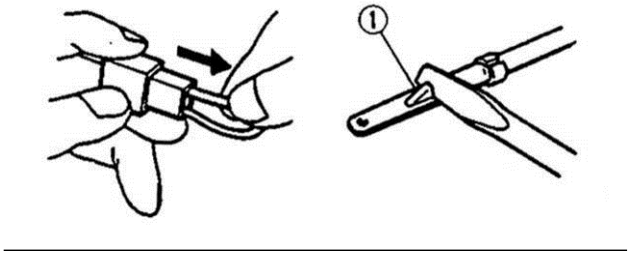

⚠ WARNING

Never run an engine in an enclosed area. Carbon monoxide exhaust gas is poisonous and can cause severe injury or death. Always start engines outdoors.

Gasoline is extremely flammable and explosive under certain conditions. Battery electrolyte is poisonous. It contains sulfuric acid. Serious burns can result from contact with skin, eyes or clothing. Always keep alert and wear protection..

Exhaust system components are very hot during and after use of CUV. Never service when the engine is warm or hot. Escaping steam from cooling system or hot oil from the machine can cause severe burns. The engine must be cool before service.

Crate of the CUV and parts in the CUV maybe have sharp edge, always pay attention and wear protection.

CONVERSION TABLE

How to use the CONVERSION TABLE

Use this table to convert METRIC unit data to IMPERIAL unit data.
Ex.

METRIC		MULIPLIER		IMP
**mm	x	0. 3937	=	**in
**cm	x	0.03937	=	**in

CONVERSION TABLE

METRIC TO IMP			
	Known	Multiplier	Result
Torque	m • kg m • kg cm • kg cm • kg	7.233 86.794 0.0723 0.8679	ft • lb In • lb ft • lb In • lb
Weight	kg g	2.205 0.03527	lb oz
Distance	km/h km m m cm mm	0.6214 0.6214 3.281 1.094 0.3927 0.03927	mph mi ft yd in in
Volume/ Capacity	cc(cm^3) cc(cm^3) lit(liter) lit(liter)	0.03527 0.06102 0.8799 0.2199	oz(IMP liq.) cu • in qt (IMP liq.) gal(IMP liq.)
Miscellaneous	kg/mm kg/cm^2 Centigrade	55.997 14.2234 9/5(℃)+32	lb/in psi(lb/in^2) Fahrenheit(° F)

1.2 V.I.N AND ENGINE SERIAL NUMBER

The vehicle identification number ① is stamped into the front of the frame tube.

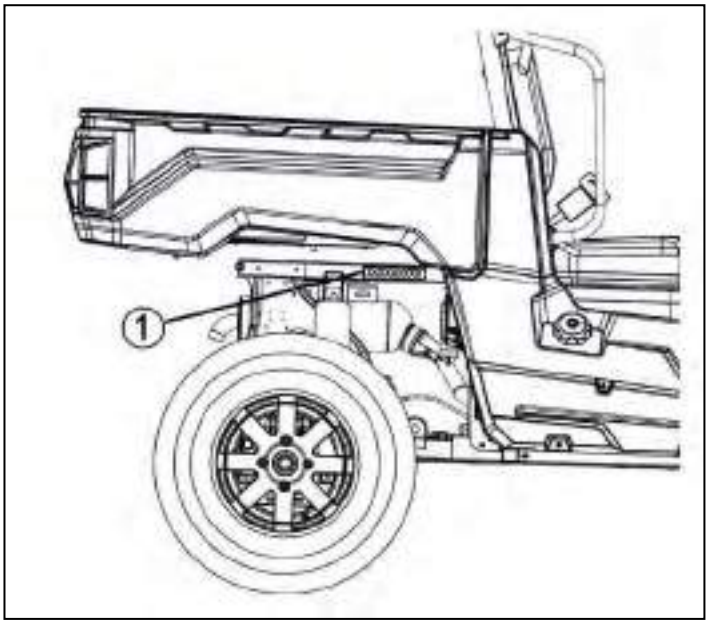

The engine serial number ① is stamped into left side of engine crankcase.

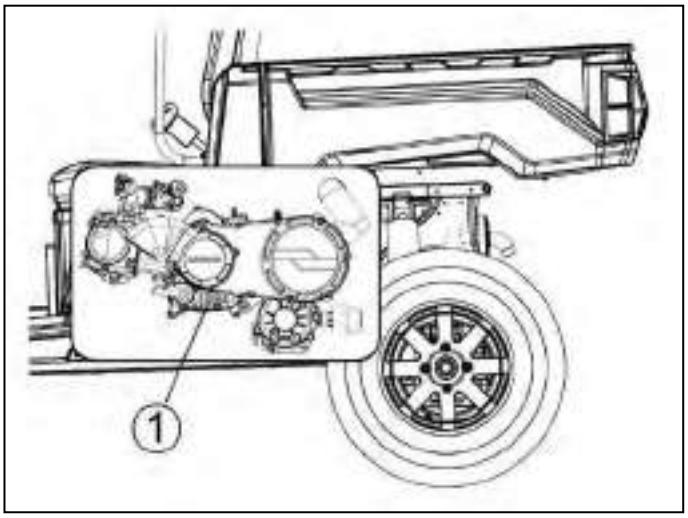

1.3 VEHICLE DIMENSIONS

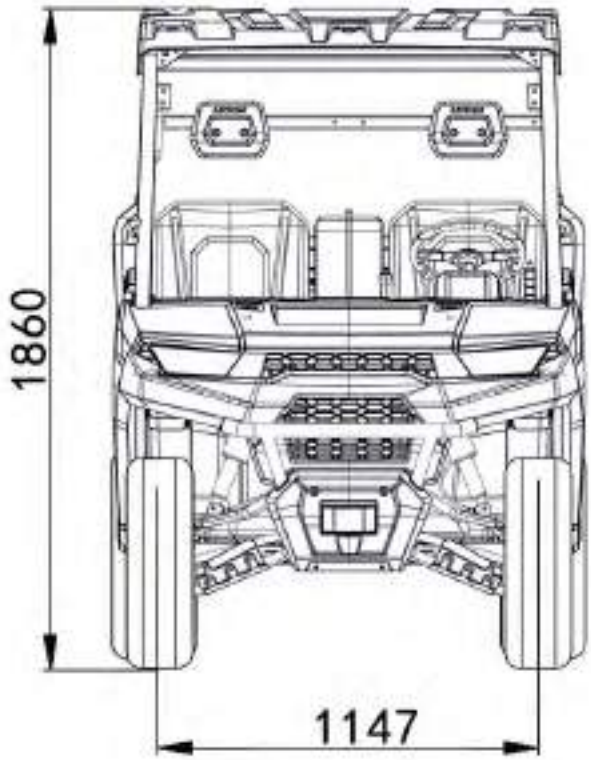

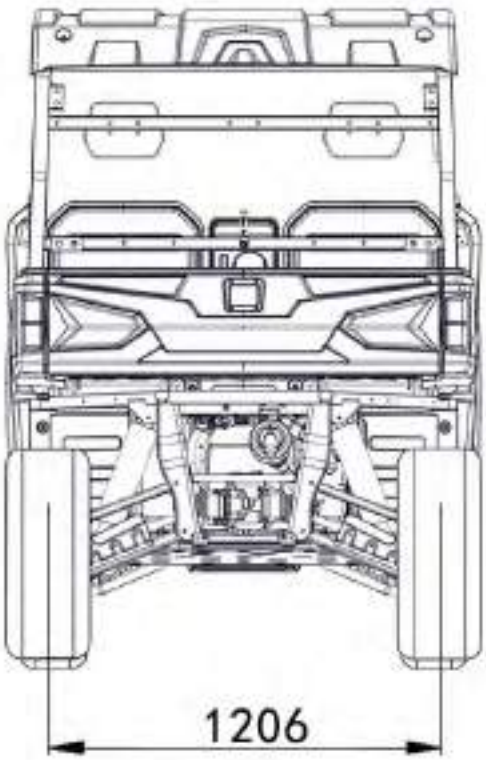

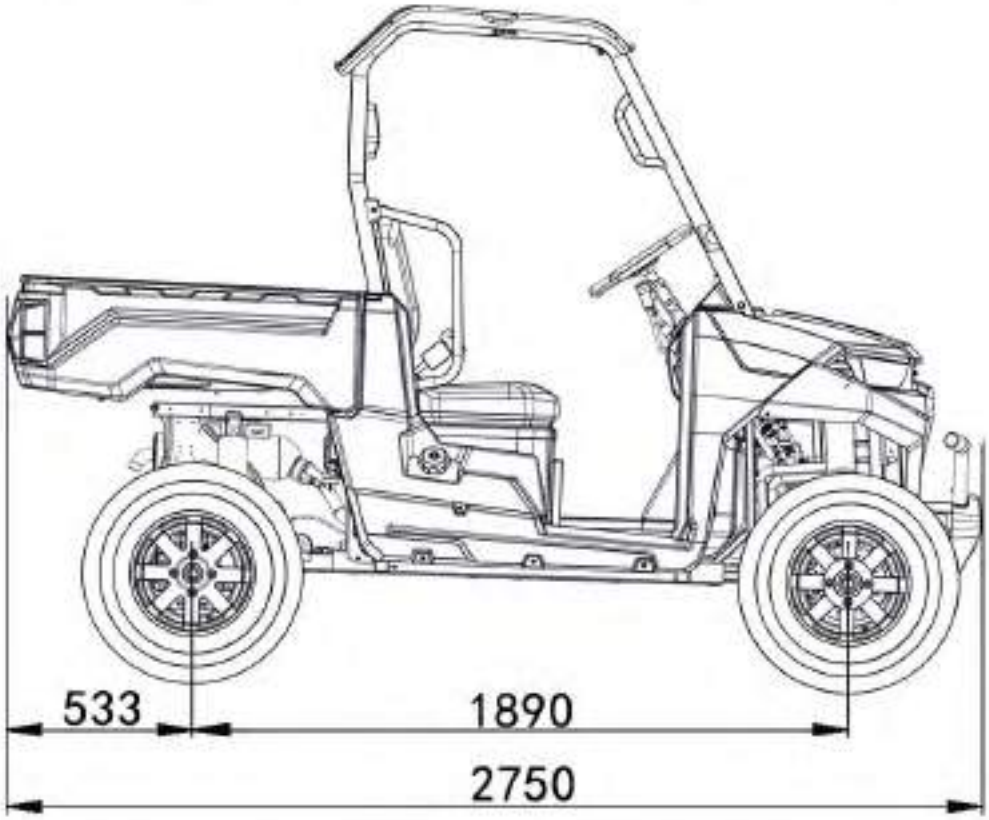

NOTES

CHAPTER 2 MAINTENANCE

⚠ WARNING

The parts of different types/ variants/ versions maybe un-interchangeable, even some parts have almost same appearance. Always refer to Parts Manual of each UTV model for spare parts information and service.

2.1 PERIODIC MAINTENANCE

GENARAL
CAUTION
Mark on the following chart
D : Due to the nature of the adjustments marked with a D on the following chart, it is recommended that service be performed by an authorized dealer.

- More often under severe use, such as dirty or wet conditions to purge water or dirt contamination from grease fittings and other critical components.

PERIODIC MAINTENANCE SCHEDULE
Careful periodic maintenance will help keep your vehicle in the safest, most reliable condition. Inspection, adjustment and lubrication intervals of important components are explained in the following chart on the following pages.
NOTE: Maintenance intervals are based upon average riding conditions and an average vehicle speed of approximately 16 km/ 10 miles per hour. However, keep in mind that if the vehicle isn't used for a long period of time, the month maintenance intervals should be followed.
Vehicles subjected to severe use, such as operation in wet or dusty areas, should be inspected and serviced more frequently.
Inspect, clean, lubricate, adjust or replace parts as necessary.
NOTE: Inspection may reveal the need for replacement parts. Always use genuine parts available from your dealer.
Service and adjustments are critical. If you are not familiar with safe service and adjustment procedures, have a qualified dealer perform these operations.

	Item	Hours	When	Remarks
●	Brake System	Pre-ride	Pre-ride	Pre-ride inspection item
	Accelerator pedal	Pre-ride	Pre-ride	Inspect –adjust, lubricate, replace if necessary; pre-ride inspection item
	Fuel System	Pre-ride	Pre-ride	Check for leaks at tank cap, lines, fuel valve and filter
●	Tires	Pre-ride	Pre-ride	Inspect daily, pre-ride inspection item
●	Front and Rear Wheels/ Hubs	Pre-ride	Pre-ride	Pre-ride inspection item
●	Steering	Pre-ride	Pre-ride	Inspect daily, lubricate
D	Wheels bearings	10 hrs	Monthly	Check for looseness/ damage. Replace if damaged.
	Frame nuts, bolts fasteners	Pre-ride	Pre-ride	Pre-ride inspection item
●	Air Filter-Pre-Cleaner	Daily	Daily	Inspect-Clean

	Item	Hours	When	Remarks
	Coolant/Level Inspection	Daily	Daily	Replace engine coolant every one year
●	Air Box Sediment Tube	Daily	Daily	Drain deposits whenever visible
	Headlamp Inspection	Daily	Daily	Check operation daily; apply dielectric grease to connector when replaced
	Tail/ indicator lamp inspection	Daily	Daily	Check operation daily; apply dielectric grease to socket when replaced
●	Air Filter-Main Element	Weekly	Weekly	Inspect –Replace if necessary
	Battery	20 hrs	Monthly	Check/clean Terminals; check fluid level
D	Brake pad wear	10 hrs	Monthly	Inspect periodically
●	Rear Gear case Oil	100 hrs	Monthly	Check monthly and change annually
●	Front Gear case Oil	100 hrs	Monthly	Check monthly and change annually
	Engine Cylinder Head and Cylinder Base Fasteners	25 hrs	3 months	Inspect (re-torque required at first service only)
●	General Lubrication	50 hrs	3 months	Lubricate all fittings, pivots, cables, etc.
●	Engine Oil-Level/Change	30 hrs	3 months	Check Level Daily; Break in Service at 1 month. Change oil more often in cold weather use.
	Engine breather hose	100 hrs	6 months	Inspect strength seasonally
D	Throttle Cable/ Accelerator pedal	20 hrs	monthly	Inspect –adjust, lubricate, replace if necessary; pre-ride inspection item
	Coolant strength	100 hrs	6 months	Inspect strength seasonally
	Shift linkage	50 hrs	6 months	Inspect, adjust
D	Drive belt	50 hrs	6 months	Inspect, replace if Necessary

	Item	Hours	When	Remarks
D	Steering system	50 hrs	6 months	Check operation and for looseness, worn, damage, binding feeling / Adjust, repair, Replace if necessary. Check toe alignment /Adjust if necessary.
D	Toe adjustment	As required	As required	Periodic inspection, adjust when parts are replaced
D	Front Axle (CV Joints)	10 hrs	Monthly	Check for/ Axle boots/ looseness/ damage.
D	Rear Axle (CV Joints)	10 hrs	Monthly	Check for/ Axle boots/ looseness/ damage.
●	Front Prop Shaft＆Shaft Yoke	50 hrs	6 months	Check for looseness/ damage.
●	Rear Prop Shaft	50 hrs	6 months	Check for looseness/ damage.
●	Front Suspension	50 hrs	6 months	Inspect-lubricate, tighten fasteners
●	Rear Suspension	50 hrs	6 months	Inspect, tighten fasteners
	Spark Plug	100 hrs	12 months	Inspect-replace if necessary
D	Ignition Timing	100 hrs	12 months	Inspect and adjust as needed
D	Fuel System	50 hrs	6 months	Check for leaks at tank cap, lines, fuel valve, filter, and carburetor. Replace lines every one year
D	Fuel Filter	100 hrs	12 months	Replace annually
	Radiator	100 hrs	12 months	Inspect/clean external surface
	Cooling System hoses	50 hrs	6 months	Inspect/replace if necessary
	Spark arrestor	10 hrs	monthly	Clean out-replace if necessary
D	Clutches (drive and driven)	25 hrs	3 months	Inspect, clean
	Engine mounts	25 hrs	3 months	Inspect
D	Valve clearance	100 hrs	12 months	Inspect/adjust
D	Brake fluid	200 hrs	24 months	Change every two years

	Item	Hours	When	Remarks
	Headlight Aim	As required	As required	Adjust if necessary

LUBRICATION RECOMMENDATIONS

	Item	Lube Rec	Method	Frequency
●	1. Engine Oil	SAE 15W/40SJ	Add to proper level on dipstick	Check level daily
	2.Brake Fluid	DOT 3 Only	Add to proper level above the minimum level mark and replenish if necessary	As require; change every two years or 200 hours
	3.Transmission Oil	SAE GL-4 85W/90	Add to proper level on dipstick	Change annually or at 100 hours
	4.Rear Gear case oil	SAE GL-4 85W/90	200ml	Change annually or at 100 hours
	5.Front Gear case oil	SAE GL-4 85W/90	200ml	Change annually or at 100 hours

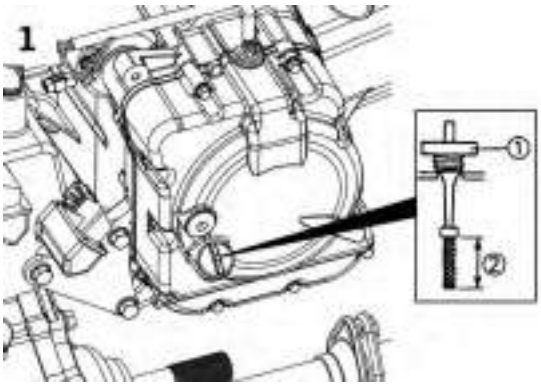

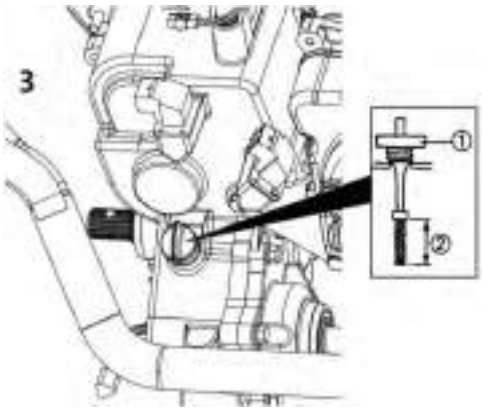

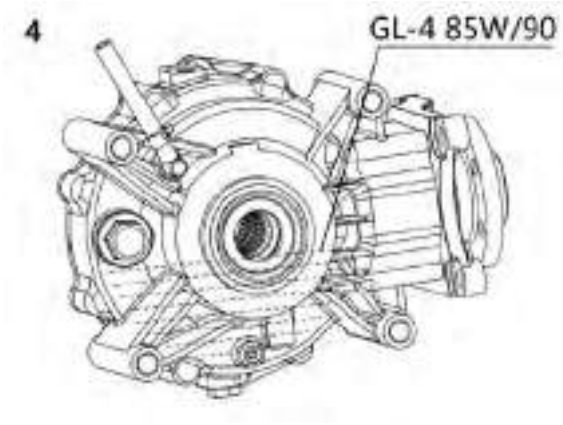

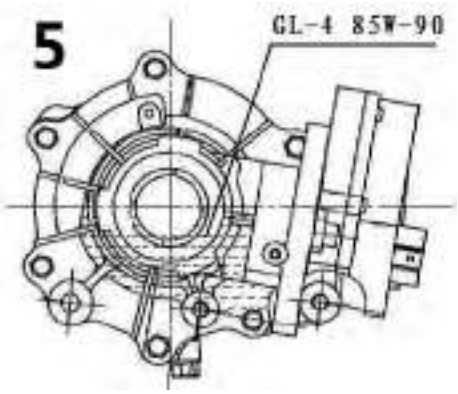

	Item	Lube Rec	Method	Frequency
●	6.Steering system	Grease	Lubricate the pivoting and sliding parts	Every 3 months or 50 hours
●	7.Tie rods	Grease	Grease	Semi-annually
●	8.Shift Linkages	Grease	Locate fittings and Grease	Semi-annually
●	9.Front Wheel bearings	Inspect	Inspect and replace bearings if necessary	Semi-annually
●	10.Ball joints	Grease	Inspect, Locate fittings and Grease, or replace it if necessary	Semi-annually
●	11.Prop Shaft & Shaft Yoke, Spline Joint	Grease	Locate fitting and Grease	Semi-annually
●	12. Front/Rear A-arm pivot Shaft	Grease	Locate fitting on pivot shaft and grease with grease gun	Every 3 months or 50 hours
●	13.Throttle Cable	Grease M	Grease, inspect and replace it if necessary	Monthly or 20 hours
●	14. Accelerator pedal and brake pedal	Grease	Grease, inspect	Monthly or 20 hours
●	15.Rear Wheel Bearing	Inspect	Inspect and replace bearings if necessary	Semi-annually

NOTE:

1. More often under severe use, such as wet or dusty conditions .
2. Grease: Light weight lithium-soap grease.
3. Grease M：molybdenum disulfide(MoS_2) grease(water resistant).
4. *When suspension action becomes stiff or after washing.
5. Hours are based on 10 mph(16Km/h) average.

2.2 THROTTLE PEDAL INSPECTION

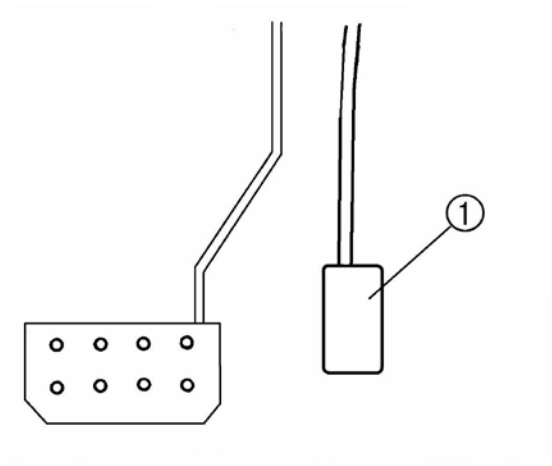

THROTTLE FREEPLAY

If the throttle pedal has excessive play due to cable stretch or cable misadjustment, it will cause a delay in throttle speed. Also, the throttle may not open fully. If the throttle pedal has no play, the throttle may be hard to control, and the idle speed may be erratic. Check the throttle pedal play periodically in accordance with the Periodic Maintenance Chart and adjust the play if necessary.

THROTTLE FREEPLAY INSPECTION

1. Apply the parking brake.
2. Put the gear shift lever in the N(Neutral) position.
3. Start the engine, and warm it up thoroughly.
4. Measure the distance the throttle pedal moves before the engine begins to pick up speed. Free play should be 1.5 – 3 mm.

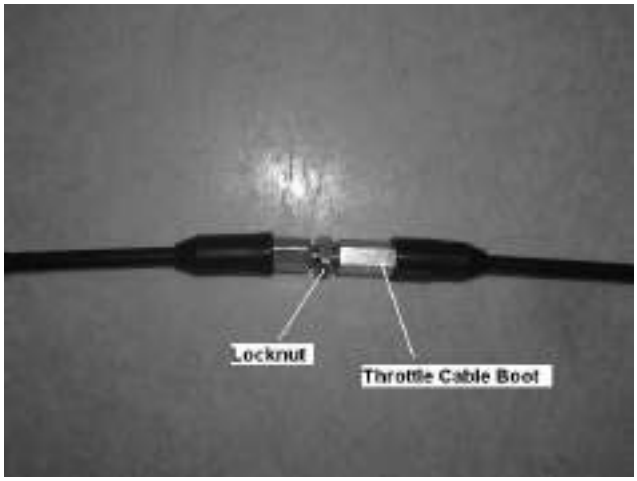

Adjustment

1. Slide the boot off inline cable adjuster sleeve. Loosen adjuster locknut.
2. Turn adjuster until 1.5 to 3 mm, freeplay is achieved pedal. NOTE: While adjusting freeplay, it is important you flip the throttle lever back and forth.
3. Tighten locknut.

2.3 FUEL SYSTEM

EFI

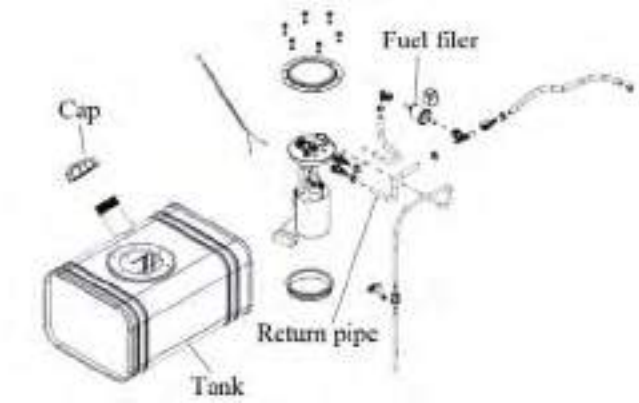

WARNING

- Always stop the engine and refuel outdoors or in a well venltilated area.
- Do not smoke or allow open flames or sparks in or near the area where refueling is performed or where gasoline is stored.
- Do not overfill the tank. Do not fill the tank neck.
- If you get fuel in your eyes or if you swallow gasoline, see your doctor immediately.
- If you spill fuel on your skin or clothing, immediately wash it off with soap and water and change clothing.
- Never start the engine or let it run in an enclosed area. Fuel powered engine exhaust fumes are poisonous and can cause loss of consciousness and death in a short time.
- Never drain the float bowl when the engine is hot. Severe burns may result.

FUEL LINES

1. Check fuel lines for signs of wear, deterioration, damage or leakage. Replace if necessary.
2. Be sure fuel lines are routed properly and secured with cable ties.

CAUTION:

Make sure lines are not kinked or pinched.

Replace all fuel lines every two years.

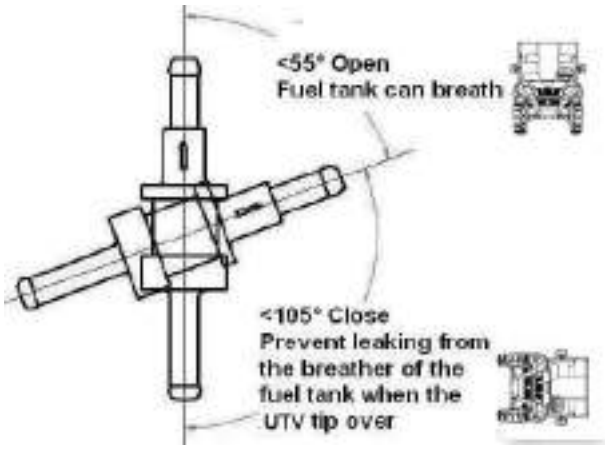

VENT LINES AND ROLL OVER VALVE

1. Check fuel tank, oil tank, battery and transmission vent lines for signs of wear, deterioration, damage of leakage. Replace every two years.
2. Be sure vent lines are routed properly and secured with cable ties.

CAUTION: Make sure lines are not kinked or pinched.
NOTE: Make sure the ↑ mark on the roll over valve is upwards.

2.4 TOE ALIGNMENT

METHOD: STRAIGHTEDGE OR STRING
Be sure the steering wheel in a straight ahead position.
NOTE: String should just touch side surface of rear tire on each side of the UTV.
Measure from string to rim at front and rear of rim.
Rear rim measurement (A) should be 1/8" to 1/4" (3 to 6 mm) more than front rim measurement (B).

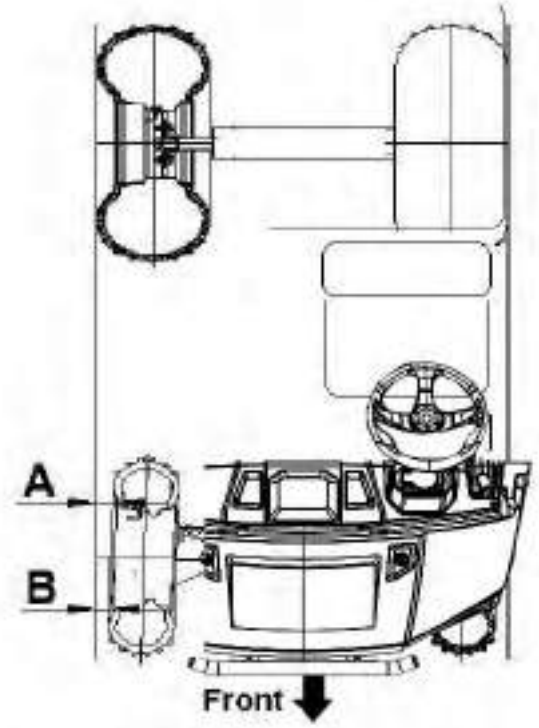

⚠ WARNING

Always pay attention to tie rods assembly, Both ends must screw in same and enough threads length.

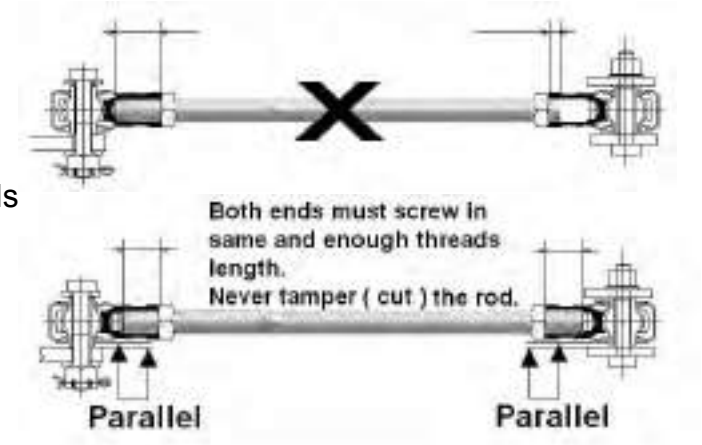

2.5 BRAKING SYSTEM INSPECTION

The following checks are recommended to keep the braking system in good operating condition. Service life of braking system components depends on operating conditions. Inspect brakes in accordance with the maintenance schedule and before each ride.

- Keep fluid level in the master cylinder reservoir to the indicated level on reservoir.
- Use DOT 3 brake fluid.

NOTE: Use new brake fluid or brake fluid from a sealed container to avoid contamination to system.

- Check brake system for fluid leaks.
- Check brake for excessive travel or spongy feel.
- Check friction pads for wear, damage and looseness.
- Check surface condition of the disc.

BRAKE PAD INSPECTION

Pads should be changed when friction material is worn to 3/64" (1mm).

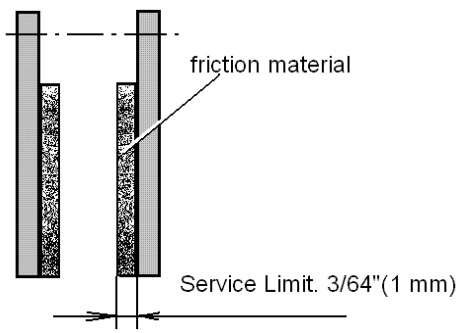

HOSE/FITTING INSPECTION

Check braking system hoses and fittings for cracks, deterioration, abrasion, and leaks. Tighten any loose fittings and replace any worn or damaged parts.

ADJUSTING THE BRAKE PEDAL

Check the brake pedal free play. Free play should be 8 – 12mm. Out of specification → Adjust.

1. Loosen the locknut
2. Turn brake rod in or out until the correct free play is obtained.
   Turning in: Free play is increased.
   Turning out: Free play is decreased.
3. Tighten the locknut.

ADJUSTING THE PARKING BRAKE

Although the parking brake has been adjusted at the factory, the brake should be checked for proper operation. The mechanical brake must be maintained to be full functional.

1. With the engine off, apply the parking brake lever and attempt to move the UTV.
2. If the rear wheels are locked, it is adjusted properly.
3. If the wheels are not locked, it must be adjusted.

To adjust (set up) the mechanical parking brake, use the following procedure

Note: The adjusting on the caliper is for the wear out of the pads.

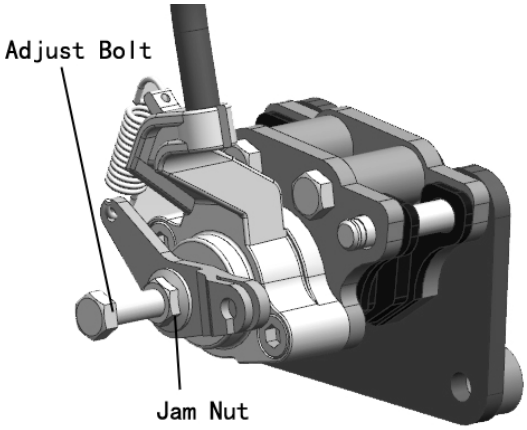

1. With the engine off, loosen the adjustor on the lever.
2. Loosen the jam nut of the adjuster on the caliper.
3. Turn the adjuster bolt CW (clockwise) by hand till the pad touch the brake disc, turn the adjuster bolt CCW (counterclockwise) by 1/4 to one turn for 10 to 20mm free play at the end of the parking lever.
4. Tighten the jam nuts securely against the adjusters.
5. Make sure the rear wheels turns freely without dragging.
6. Turn the adjustor (the one on the lever) and apply

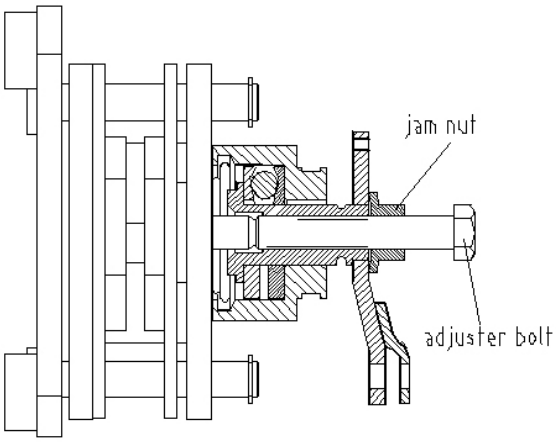

the lever. While adjusting, it is important you apply the lever back and forth for operation, free play and the locking of the parking position.

7. Make sure the rear wheels turns freely without dragging and parking brake works properly.
8. Field test for parking. It must be capable of holding the laden UTV stationary on an 20% up and down gradient.

A temporary adjusting can also be done to the brake cable on the parking lever side by turn the adjuster (nut) directly. But the adjust range is limited. Always do the **procedure 1 to 8** when necessary.

2.6 SUSPENSION SPRING RPELOAD ADJUSTMENT

Operator weight and vehicle loading affect suspension spring preload requirements. Adjust if necessary.

FRONT SUSPENSION

Compress and release front suspension. Damping should be smooth throughout the range of travel.
Check all front suspension components for wear or damage.

Inspect shock for leakage.

Shock spring preload can be adjusted using the shock spanner wrench.

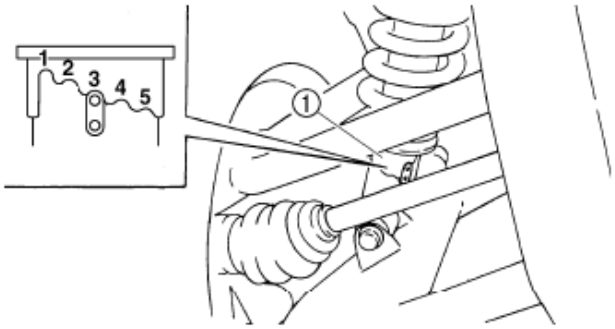

REAR SUSPENSION

Compress and release rear suspension. Damping should be smooth throughout the range of travel. Check all rear suspension components for wear or damage.

Inspect shock for leakage

Shock spring preload can be adjusted using the shock spanner wrench.

⚠ WARNING

Always adjust both shock absorber spring preload to the same setting. Uneven adjustment can cause poor handling and loss of stability.

Turn the adjuster ① to increase or decrease the spring preload.
Standard position: 3
Minimum (Soft) position: 1
Maximum (Hard) position: 5

2.7 WHEELS

Inspect all wheels for run out of damage.
Check wheel nuts and ensure they are tight.
Do not over tighten the wheel nuts.

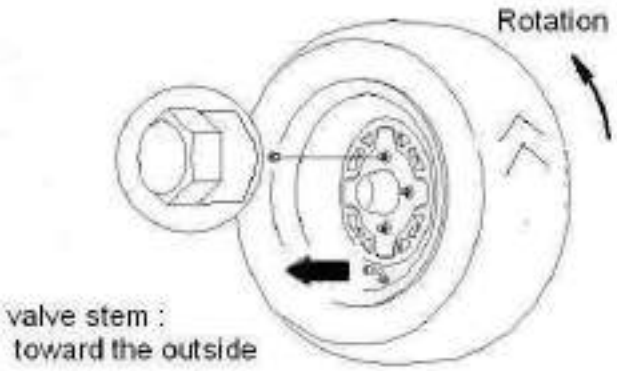

Front and rear

WHEEL REMOVAL

1. Stop the engine, place the transmission in gear and lock the parking brake.
2. Loosen the wheel nuts slightly.
3. Elevate the side of the vehicle by placing a suitable stand under the footrest frame.
4. Remove the wheel nuts and remove the wheel.

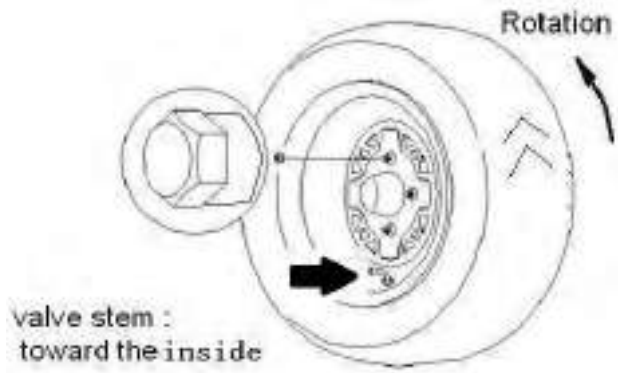

Front and rear

WHEEL INSTALLATION

1. With the transmission in gear and the parking Brake locked, place the wheel in the correct Position on the wheel hub. Be sure the valve stem is toward the outside and rotation arrows on the tire point toward rotation.
2. Attach the wheel nuts and finger tighten them. Install as shown at left for front or rear wheels.
3. Lower the vehicle to the ground.
4. Securely tighten the wheel nuts to the proper Torque listed in the table. On wheel nuts, Make sure tapered end of nut goes into taper on wheel.

WHEEL NUT TORQUE SPECIFICATIONS

Bolt Size	Specification	
Front M10X1.25	63Ft.Lbs	85Nm
Rear M10X1.25	63Ft.Lbs	85Nm

CAUTION: If wheels are improperly installed it could affect Vehicle handling and tire wear.

2.8 TIRE PRESSURE

TIRE INSPECTION

CAUTION:

- Maintain proper tire pressure. Refer to the warning tire pressure decal applied to the vehicle.
- Improper tire inflation may affect UTV maneuverability.
- When replacing a tire always use original equipment size and type and replace in pairs, especially in 4X4 model.
- The use of non- standard size or type tires may affect UTV handling and cause machine damage, especially in 4X4 model.

Tire Pressure Inspection	
Front	**Rear**
see detail on the mark of sidewall	see detail on the mark of sidewall

TIRE TREAD DEPTH

Always replace tires when tread depth is worn to 1/8" (3mm) or less.

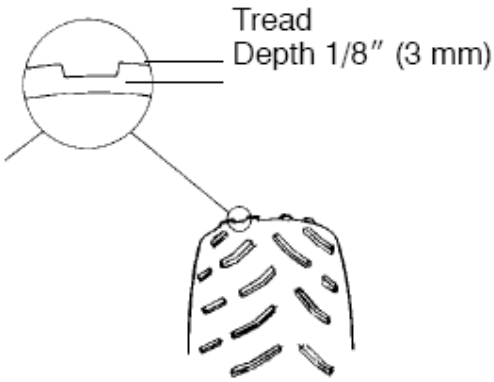

⚠ WARNING

Operating an UTV with worn tires will increase the possibility of the vehicle skidding easily with possible loss of control.

Worn tires can cause an accident.
Always replace tires when the tread depth measures 1/8" (3mm) or less.

2.9 FRAME , NUTS, BOLTS, FASTENERS

Periodically inspect the tightness of all fasteners in accordance with the maintenance schedule. Check that all cotter pins are in place. Refer to specific fastener torques listed in each chapter.

NOTES

CHAPTER 3 ENGINE

3.1 MAINTENANCE SPECIFICATIONS

3.1.1SPECIFICATIONS

Item	Standard	Limit
Cylinder head : Warp limit		0.03 mm
Cylinder: Bore size Out of round limit	80.000- 80.014 mm	80.025 mm 0.03 mm
Camshaft: Cam dimensions Intake "A" "B" "C" Exhaust "A" "B" "C" Camshaft runout limit	 36 .545- 36 .645 mm 30.021-30.121 mm 6.524 mm 36 .547- 36 .647 mm 30 .067- 30.167 mm 6.48 mm …..	 36 .45 mm 29.92 mm … 36 .45 mm 29 .97 mm … 0.03m m
Cam chain: Cam chain type/No. of links	DID SC.A-0404A SDH/108	…
Rocker arm /rocker armshaft: Rocker arm inside diameter Rocker shaft outside diameter Rocker arm - to- rocker arm shaft clearance	 12.000- 12.018 mm 11.981- 11.991 mm 0.009- 0.012 mm	 12 .03 mm 11.95 mm …
Valve, Valve seat, Valve guide: Valve clearance (cold) IN Valve dimensions EX	 0.08-0.12 mm 0.16-0.20 mm	 … …
"A" head diameter IN EX "B" face width IN EX "C " seat width IN EX "D" margin thickness IN EX Stem outside diameter IN EX Guide inside diameter IN EX	33.9-34.1mm 28.4-28.6mm 3.394-3.960mm 3.394-3.960 mm 0.9-1.1mm 0.9-1.1 mm 0.8-1.2 mm 0.8-1.2 mm 5.975- 5.990 mm 5.960-5.975 mm 6.000- 6.012 mm 6.000- 6.012 mm	… … … … … … … 5.94 mm 5.92 mm 6.05 mm 6.05 mm

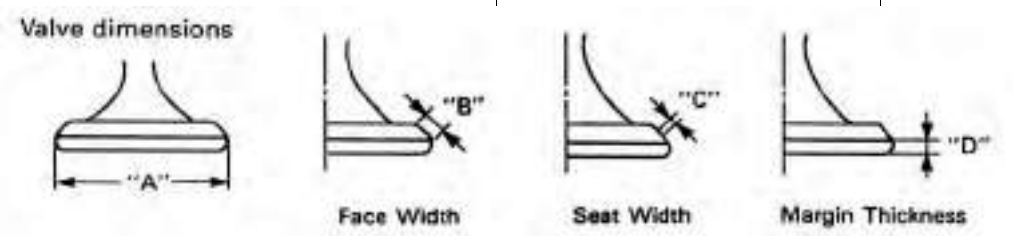

Item	Standard	Limit
Stem-to-guide clearance IN	0.010- 0.037 mm	0.08 mm
EX	0.025-0.052 mm	0.1 mm
Stem runout limit	…	0.01 mm
Valve seat width IN	0.9-1.1 mm	1.6 mm
EX	0.9-1.1 mm	1.6 mm
Valve spring :		
Free length (Inner) IN/EX	38.1 mm	36.1 mm
(Outer) IN/EX	36.93 mm	35.0 mm
Set length (valve closed) (Inner) IN/EX	30.1 mm	…
(Outer) IN/EX	31.6 mm	…
Com pressed pressure (Inner) IN/EX	7.8- 9.0 kg	…
(Outer) IN/EX	37.22-42.83 kg	…
Tilt limit (Inner) IN/EX	…	2.5° /1.7mm
(Outer) IN/EX	…	2.5° /1.7mm
Piston:		
Piston to cylinder clearance	0.02 - 0.049mm	0.15m m
Piston size "D"	79.965-79.980 mm	…
Measuring point "H"	5mm	…
Piston pin bore inside diameter	18.004-18.015 mm	18.045 mm
Piston pin outside diameter	17 .991-18 .000 mm	17 .975 mm
Piston rings :		
Top ring :		
Type	Barrel	…
End gap (installed)	0.2-0.35 mm	0.5 mm
Side clearance (installed)	0.03-0.065 mm	0.1 mm
2nd ring :		
Type	Taper	…
End gap (installed)	0.28-0.48 mm	0.73 mm
Side clearance	0.02-0.052 mm	0.1 mm
Oil ring :		
End gap (installed)	0. 15-0.4 mm	…
Crankshaft:		
Crank width "A"	59.95-60.00 mm	…
Runout limit "C "	0.03 mm	…
Big end side clearance "D"	0.35- 0.85 mm	…

Item	Standard	Limit
Automatic centrifugal clutch: Clutch shoe thickness Clutch hosing inside diameter Clutch shoe spring free length W eight outside diameter Clutch- in revolution	 3.0 mm 135 mm 28.1 mm 20 mm 2 ,100- 2,700 r/m in	 2.0 mm 135.5 mm … 19 .5 mm …
V-belt: V-belt width	 22.6 mm	 21.0 mm
Oil pump: Type Tip clearance Side clearance Housing and rotor clearance	 Trochoid type 0.1- 0.34 mm 0.013- 0.036 mm 0 .04- 0.09 mm	 0 .4 mm 0.15 mm 0.15 mm

Item	Standard	Limit
Radiator: Type Width/height/thickness Radiator cap opening pressure Radiator capacity Reservoir tank capacity	 Cooling fin with electric fan 360/246/68 mm 110-140kPa (1.1-1.4kg/cm^2, 1.1-1.4bar) 2 L 0.35 L	 … … … … …
Thermostatic valve: Valve opening temperature Valve full open temperature Valve full open lift	 70- 74℃ 83 ℃ 4 mm	

3.1.2TIGHTENING TORQUES

Part to be tightened	Part name	Thread size	Q'ty	Tightening Torque N.m	m.kg	Remarks
Oil check bolt	_	M 6	1	7	0.7	
Spark plug	_	M12	1	18	1.8	
Cam sprocket cover	Bolt	M 6	2	10	1.0	
Cylinder head and cylinder	Nut	M 8	4	22	2 .2	
Cylinder head and cylinder (Cam chain side)	Bolt	M 6	2	10	1.0	
Valve cover	Bolt	M 6	5	10	1.0	
Rotor	Nut	M16	1	80	8.0	
Valve adjuster locknut	Nut	M 6	2	14	1.4	
Cam shaft bearing stopper	Bolt	M 6	2	8	0 .8	
Cam sprocket	Bolt	M10	1	60	6.0	
Cam chain tensioner						
(Body)	Bolt	M 6	2	10	1.0	
(Plug)	Bolt	M8	1	8	0.8	
Guide stopper 2	Bolt	M 6	1	10	1.0	
Water pump housing cover	Bolt	M 6	3	10	1.0	
Hose joint	_	M 6	2	7	0.7	
Thermostatic valve cover	Bolt	M 6	2	10	1.0	
Filer neck supporting	Bolt	M 5	1	5	0 .5	
Oil pump	Screw	M 6	2	7	0.7	
Oil pump cover	Bolt	M 3	1	1	0.1	
Drain plug	Bolt	M 35	1	32	3 .2	
Exhaust pipe assembly	Nut	M8	2	20	2.0	
Crankcase (left and right)	Bolt	M 6	9	10	1.0	
Drain bolt	Bolt	M 8	1	22	2 .2	
Oil filer	Bolt	M 14	1	3	0 .3	
Crankcase cover (left)	Bolt	M 6	10	10	1.0	
Magnet cover	_	M 6	10	10	1.0	

Part to be tightened	Part name	Thread size	Q'ty	Tightening torque Nm	Tightening torque m.kg	Remarks
Cover (oil pump)	Bolt	M 6	2	12	1.2	
Timing check plug	Plug	M16	1	8	0 .8	
One way clutch	_	M 8	3	30	3.0	
Clutch housing	Bolt	M14	1	60	6.0	
Grease stopper (Primary sheave)	_	M 4	4	3	0 .3	
Primary fixed sheave	_	M14	1	60	6.0	
Clutch carrier assembly	_	M36	1	90	9.0	
Stator	_	M 5	3	7	0.7	
Pick up coil	_	M 5	2	7	0.7	
Starter motor	Bolt	M 6	2	10	1.0	
Thermo switch	_	M16	1	23	2 .3	

3.2 PARTS INSPECTION AND SERVICE

3.2.1VALVE CLEARANCE ADJUSTMENT

NOTE:

Valve clearance adjustment should be made with the engine cool, at room temperature.
When the valve clearance is to be measured or adjusted, the piston must be at Top Dead Center (T.D.C.) on the compression.

1. Remove :
●Crankcase cover
2. Remove :
●Spark plug
●Valve cover (intake side)
●Valve cover (exhaust side)
3. Remove:
●Timing check plug
4.Measure:
●Valve clearance
Out of specification → Adjust.

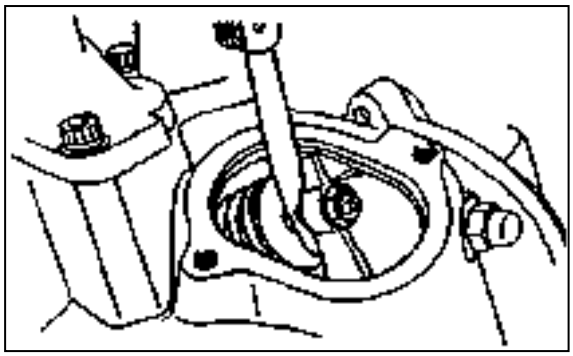

Valve clearance (cold):
Intake valve 0.08- 0.12m m
Exhaust valve 0.13- 0.16mm

Measurement steps:

●Rotate the primary fixed sheave counterclockwise to align the slit ⓐ on the rotor with the stationary pointer ⓑ on the crankcase cover when the piston is Top Dead Center (TDC).
●Measure the valve clearance by using a feeler gauge.

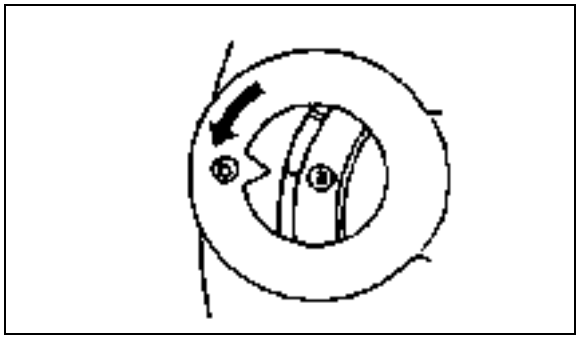

6. Adjust
●Valve clearance

Adjustment steps:

●Loosen the locknut ①
●Turn the adjuster ③ in or out with the valve adjusting tool ② until specified clearance is obtained .
Turning in → Valve clearance is decreased
Turning out → Valve clearance is increased
●Hold the adjuster to prevent it from moving and tighten the locknut. 14Nm(1.4m·kg)

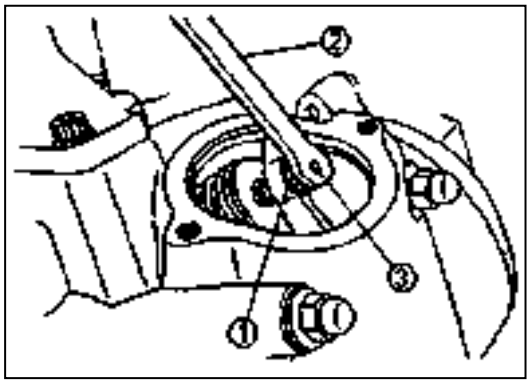

●Measure the valve clearance.
●If the clearance is incorrect, repeat above steps until specified clearance is obtained.

7. Install:

●Valve cover (intake side) ① 10Nm(10m·kg)

●O-ring②

8. Install:

●Valve cover(exhaust side) 10Nm(1.0m·kg)

●O-ring

●Spark plug 18Nm(1.8m·kg)

●Timing check window screw

●Crankcase cover 10Nm(1.0m·kg)

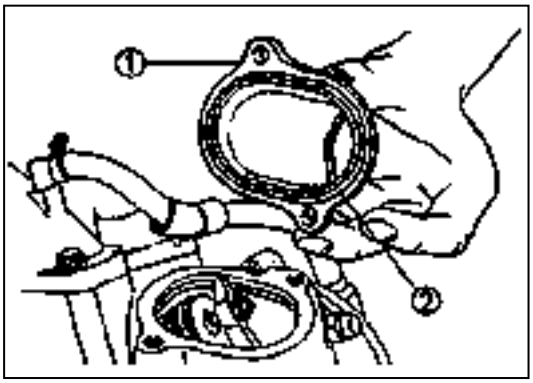

3.2.2 SPARK PLUG INSPECTION

1.Remove :
● Spark plug cap
● Spark plug

CAUTION:

Before removing the spark plug, use compressed air to blow away any dirt accumulated in the spark plug wells to prevent it from falling into the cylinder.

2. Check:
●Spark plug type
Incorrect ⟶ Replace.

	Standard spark plug: **DR8EA (NGK)**

3.Inspect:
●Electrode ①
Wear/ damage ⟶ Replace.
●Insulator ②
Abnormal color ⟶ Replace.
Normal color is a medium - to- light tan color.
4.Clean:
●Spark plug

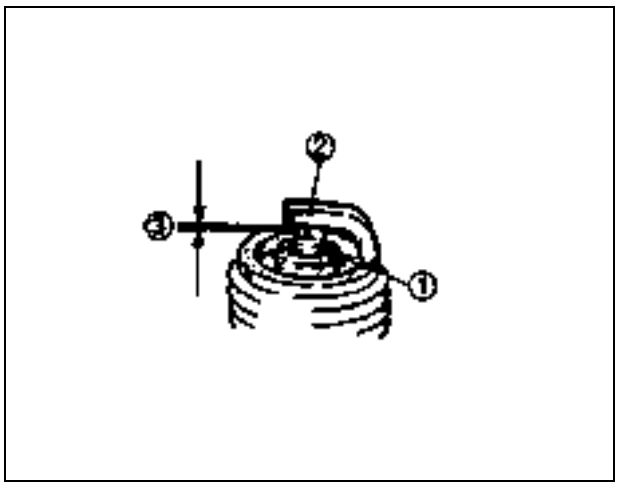

(with spark plug cleaner or w ire brush)

5.Measure:

●Spark plug gap ③

(with a wire gauge)

Out of specification ⟶ Adjust gap.

	Spark plug gap : 0.6-0.7 mm

6. Install:

●Spark plug 18Nm(1.8m·kg)

NOTE:

Before installing a spark plug, clean the Gasket surface and plug surface.

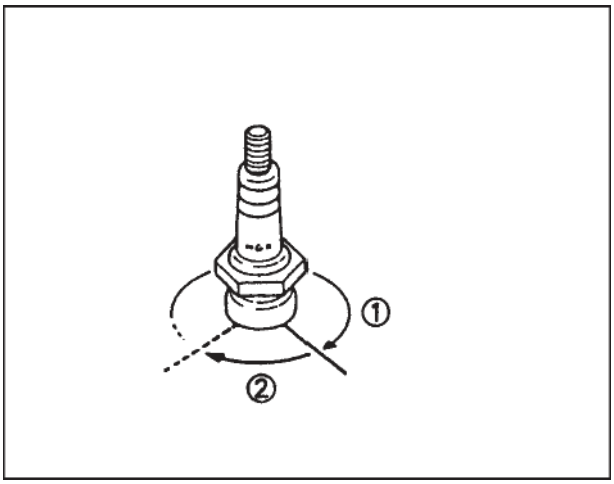

3.2.3 COMPRESSION PRESSURE MEASUREMENT

NOTE :

Insufficient compression pressure will result in performance loss.

1. Check:

●Valve clearance

Out of specification ⟶Adjust.

Refer to “CALCE CLEARANCE ADJUSTMENT” section.

2. Start the engine and let it warm up for several minutes.

3. Turn off the engine.

4. Remove:

●Spark plug

Before removing the spark plug, use com pressed air to blow away any dirt accumulated in the spark plug well to prevent it from falling into the cylinder.

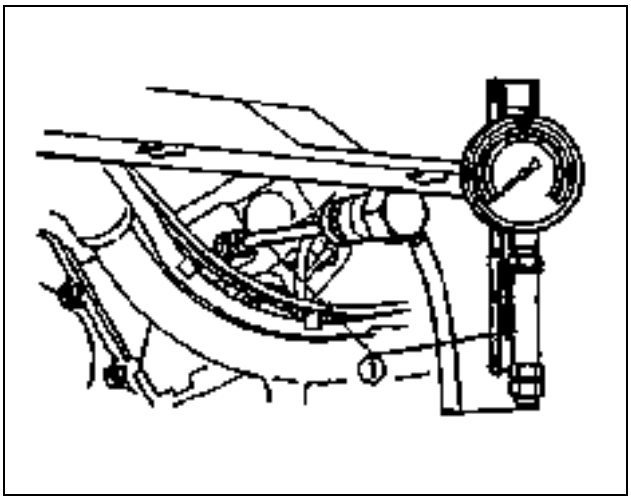

5. Attach:

●Compression gauge①

6. Measure:

●Compression pressure

If it exceeds the maximum pressure allowed→
Inspect the cylinder head, valve surfaces and piston crown for carbon deposits.

If it is below the minimum pressure →
Squirt a few drops of oil into the affected cylinder and measure again. Follow the table below.

Compression pressure (With oil applied into cylinder)	
Reading	Diagnosis
Higher than without oil	Worn or damaged pistons
Same as without oil	Possible defective ring (s), valves, cylinder head gasket or Piston →Repair.

	Compression pressure(at sea level): Standard: 1,400 kPa (14Kg/cm^2, 14 bar) Minimum : 1,120 kPa (11.2 kg /cm ^{2}, 11.2 bar)

Measurement steps :
●Crank the engine with the throttle wide open until reading on the compression gauge stabilizes.

WARNING :
Before cranking the engine, ground all spark plug leads to prevent sparking.

8. Install:

● Spark plug 18Nm(1.8m·kg)

3.2.4 ENGINE OIL LEVEL INSPECTION

1. Start the engine and let it warm up for a few minutes .
2. Turn off the engine.
3. Inspect: (Do not thread dipstick in)

●Engine oil level

Oil level should be between maximum and minimum ② marks.

Oil level is below the minimum mark Add oil up to the proper lever.

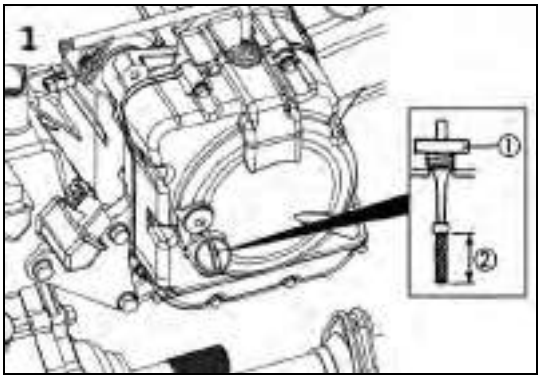

RECOMMENDED ENGINE OIL

Refer to the chart for selection of the oils suited to the atmospheric temperature.

	API STANDARD: **API SE or higher grade**

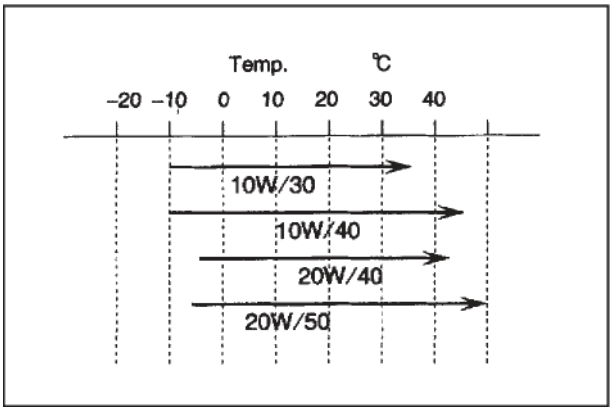

CAUTION:

●Do not put in any chemical additives or use oils with a grade of CD or higher.

●Be sure not to use oils labeled "ENERGY CONSERVING I" or higher. Engine oil also lubricates the clutch and additives could cause clutch slippage.

●Be sure no foreign material enters the crankcase.

4. Start the engine and let it warm up for a few minutes.
5. Turn off the engine.

NOTE:

Wait a few minutes until the oil settles before inspecting the oil level.

ENGINE OIL REPLACEMENT

1. Start the engine and let it warm up for several minutes .
2. Turn off the engine and place an oil pan under the engine.
3. Remove :

●Oil filer plug

●Drain plug ① 32Nm(3.2m·kg)

●Compression spring ②

●Oil strainer ③

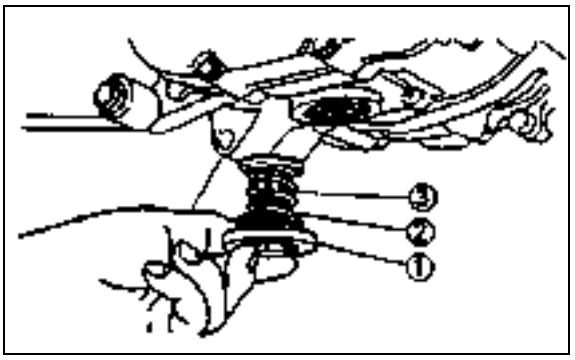

●O-ring
●Drain the crankcase of its oil.

4. Install:
●O-ring ① NEW
●Compression spring ②
●Oil strainer ③
●Drain plug ④
●Oil filer plug

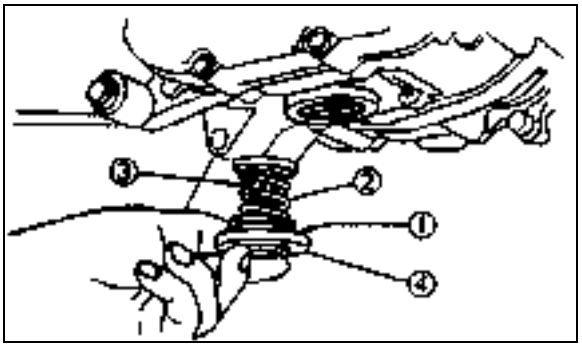

NOTE :
Check the drain plug O-ring. If damaged, replace it with a new one.

5. Fill:
●Crankcase

	Oil quantity: 1.4L

6. Check:
●Engine oil level
Refer to "ENGINE OIL LEVEL INSPECTION" section

ENGINE OIL PRESSURE INSPECTION
Inspection steps:
●Slightly loosen the oil check bolt ①
●Start the engine and keep it idling until the oil begins to seep from the oil check bolt. If no oil comes out after one minute, turn the engine off so it will not seize.
●Check oil passages and oil pump for dam age or leakage.
●Start the engine after solving the problem (s), and recheck the oil pressure.
●Tighten the oil check bolt to specification.
10Nm(1.0m·kg)

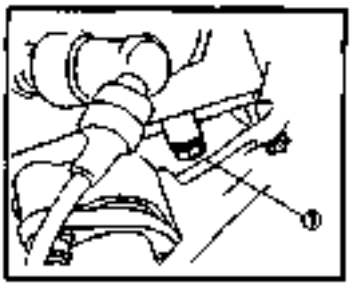

CAUTION:
●Start the engine and check the oil pressure with the oil check bolt loosened.
●Do not apply at high speeds more than specified when checking the pressure.

NOTE:
Wipe any spilled oil off the engine.

3.2.5 COOLANT LEVEL INSPECTION

Inspect:

●Coolant level

Coolant level should be between the maximum ⓐand minimumⓑ marks.

Coolant level is below the "LOWER" level line Add soft water (tap water) up to the proper level.

CAUTION:

Hard water or salt water is harmful to engine parts. Use only distilled water if soft water is not available. If you use tap water, make sure it is soft water.

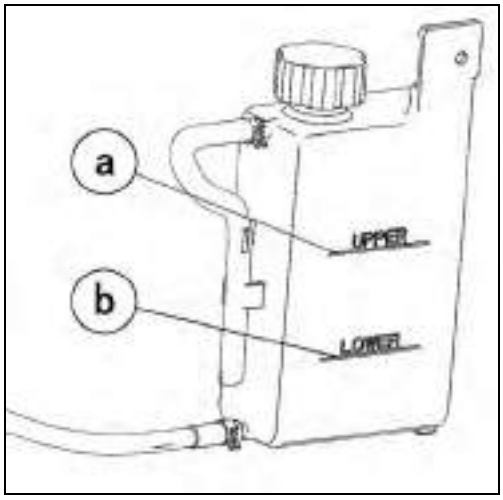

1. Start the engine and let it warm up for several minutes.
2. Turn off the engine and inspect the coolant level again.

NOTE:

Wait a few minutes until the coolant settles before inspecting the coolant level.

COOLANTRE PLACE MENT

1. Remove:

●Front cover of UTV plastic body work.

●Seat.

2. Remove:

●Hose ① (reservoir tank)

Drain the reservoir tank of its coolant.

3. Remove:

●Drain bolt ①

●Radiator cap

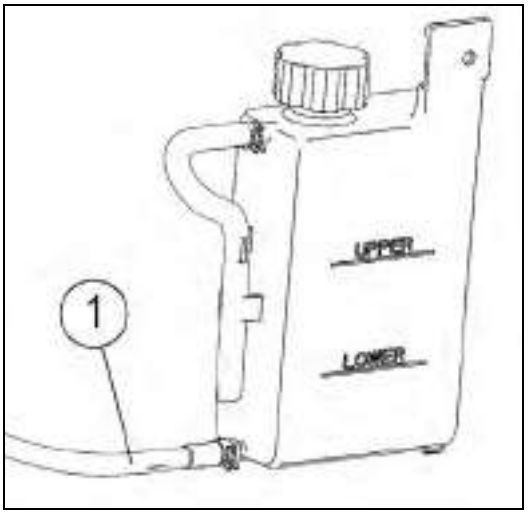

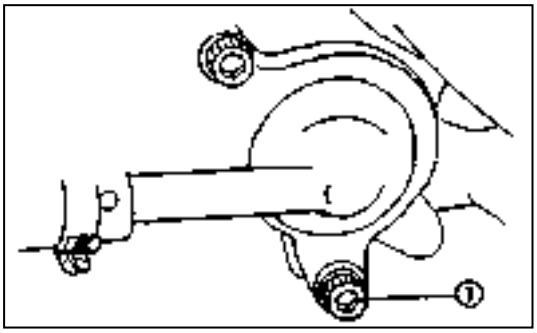

WARNING:

Do not remove the radiator cap when the engine and radiator are hot. Scalding hot fluid and steam may be blown out under pressure, which could cause serious injury. When the engine has cooled, open the radiator cap as follows:

Place a thick rag or a towel over the radiator cap. Slowly rotate the cap counterclockwise toward the detent. This allows any residual pressure to escape. When the hissing sound has stopped, press down on the cap while turning counterclockwise and remove it.

NOTE:
●Remove the radiator cap after removing the drain bolt.

4. Clean:
●Radiator
Fill soft water into the filer neck support ① (reservoir tank).
5. Install:
●Gasket ① NEW
●Drain bolt② 10Nm(1.0m·kg)

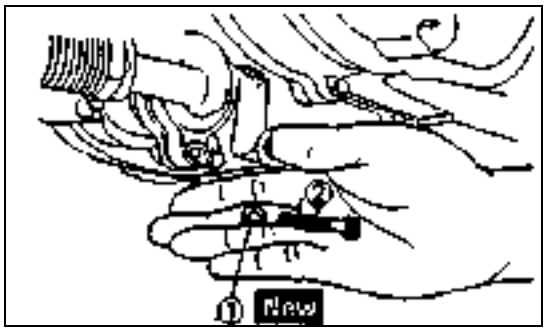

6. Loosen:
●Hose①

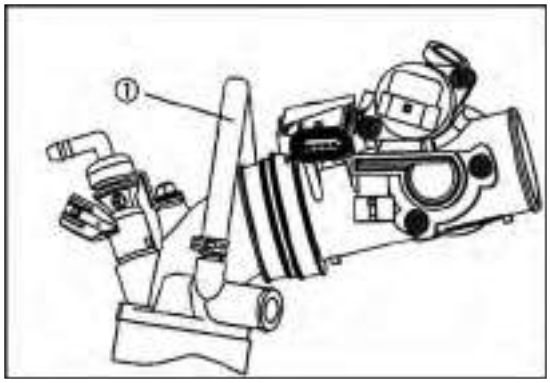

7. Connect:
●Hose (reservoir tank)
8. Fill:
●Radiator
(to specified level①)
Fill the coolant slowly, until the coolant comes out from the head hose.
●Reservoir tank
(to maximum level ⓐ)

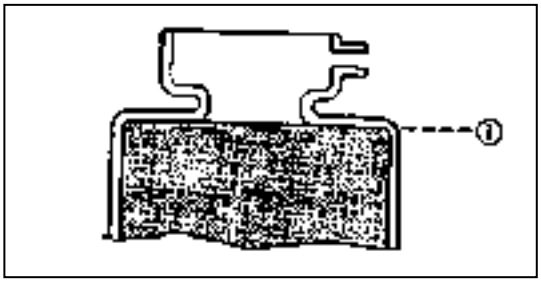

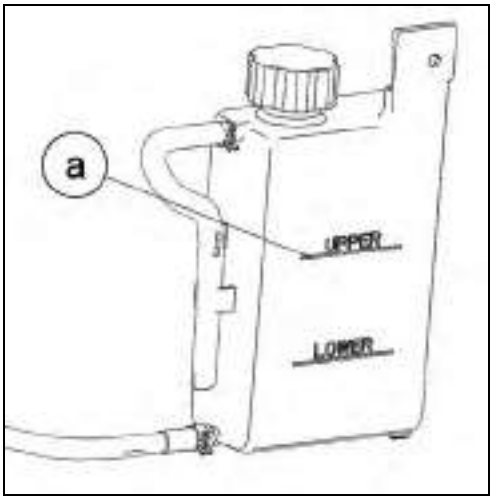

	Recommended coolant: High quality ethylene glycol anti-freeze containing corrosion inhibitors for aluminum engine.

Handling notes for coolant:
Coolant is potentially harmful and should be handled with special care.

WARNING:

splashes in your eyes:

Thoroughly wash your eyes with water and consult a doctor.

If coolant splashes on your clothes:

●Quickly wash it away with water and then with soap and water.

If coolant is swallowed:

Vomit immediately and see a physician.

CAUTION:

●Take care that no coolant splashes onto painted surfaces. If it does, wash them immediately with water.

●Do not mix different types of ethylene glycol antifreeze containing corrosion inhibitors for aluminum engines.

9. Tighten:

●Hose

Fill the coolant slowly to the specified level.

10. Install:

●Radiator cap

11. Start the engine and let it warm up for several minutes.

12. Stop the engine and inspect the level.

NOTE:

Wait a few minutes until the coolant settles before inspecting the coolant level.

13. Install: Remain parts.

3.3 CYLINDER HEAD

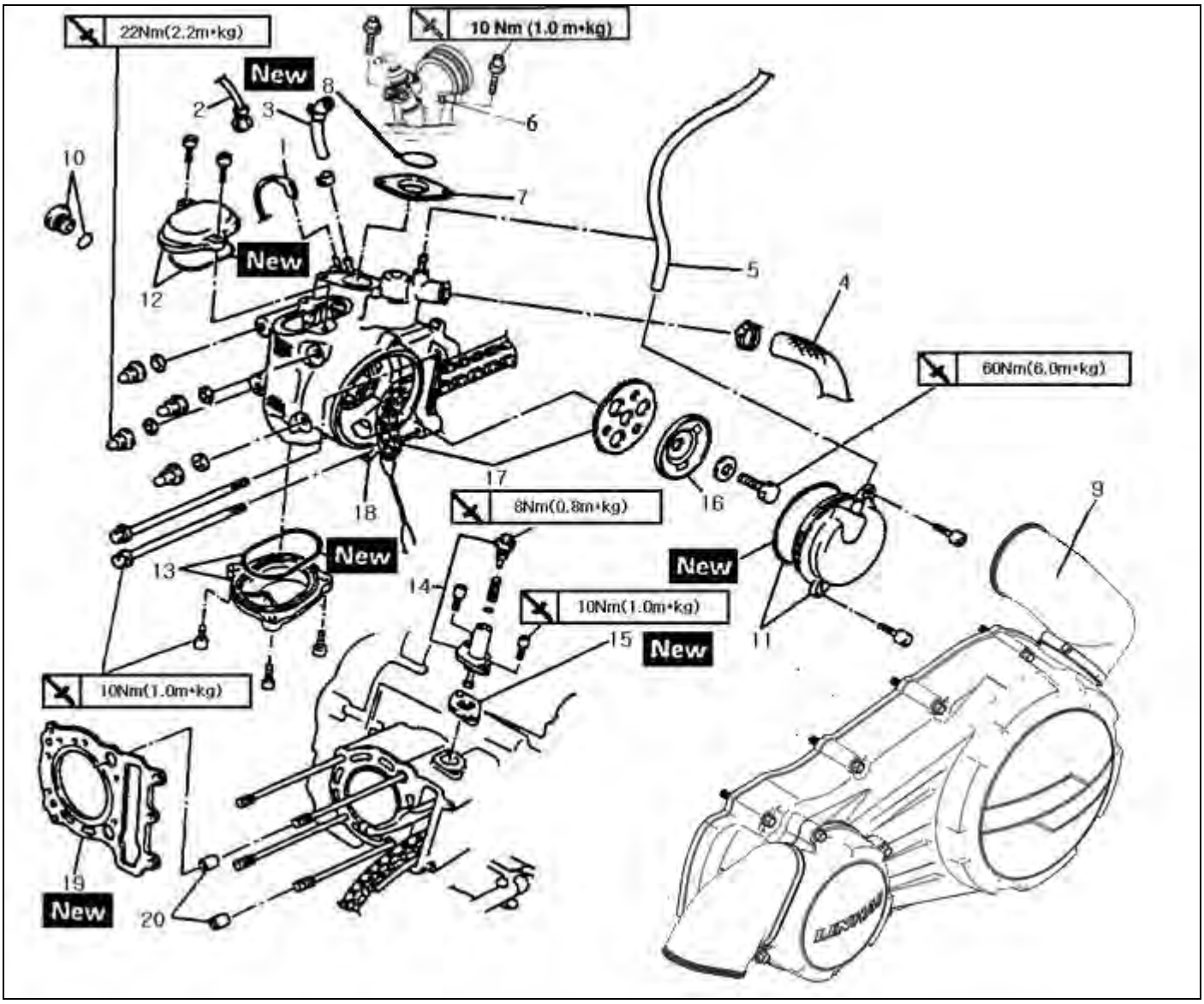

Order	Job name/Part name	Q ’ty	Remarks
	Cylinder head removal		Remove the parts in order.
	Drain the coolant.		
	Side panel		
	Footrest board		
1	Thermo unit lead	1	
2	Plug cap	1	
3	Crankcase breather hose	2	
4	Outlet hose (cylinder head)	1	
5	Breather hose (crankcase)	1	
6	Injector seat	1	
7	Joint	1	
8	O-ring	2	
9	Crankcase cover	1	
10	Plug/O-ring	1/1	
11	Cam sprocket cover/O-ring	1/1	
12	Valve cover (intake side)/O-ring	1/1	
13	Valve cover (exhaust side)/O-ring	1/1	
14	Timing chain tensioner assembly	1	Refer to "CYLINDER HEAD REMOVAL AND INSTALLATION" section.
15	Timing chain tensioner gasket	1	
16	Breather plate	1	
17	Cam sprocket/Timing chain	1/1	
18	Cylinder head	1	Reverse the removal procedure for installation.
19	Cylinder head gasket	1	
20	Dowel pin	2	

CYLINDER HEAD REMOVAL

1. Align:
"I" mark ⓐ on the rotor
(with stationary pointer ⓑ on the crankcase cover)
NOTE: If any special mark found, contact the UTV manufacture via the agent for the parts and special instruction.

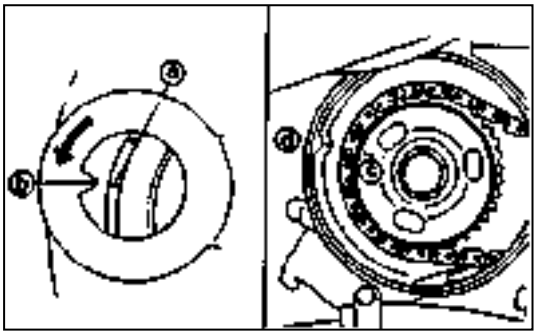

NOTE:
Turn the primary sheave counterclockwise with a wrench and align the "I" mark ⓒ with the cylinder head match mark ⓓ when the piston is at TDC on the compression

2. Loosen:
●Bolt ①
3. Remove:
●Timing chain tensioner assembly
●Timing chain tensioner gasket
4. Remove:
●Breather plate ②
●Cam sprocket ③
●Timing chain④

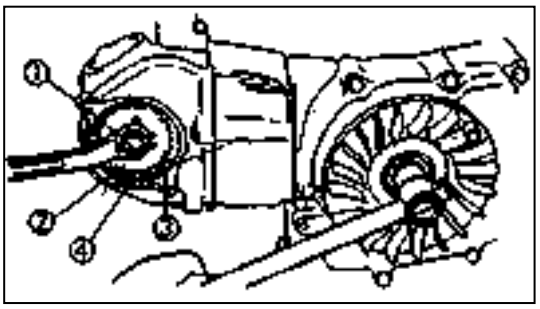

NOTE:
●Fasten a safety w ire to the timing chain to prevent it from falling into the crankcase.
●Remove the bolt ① while holding the rotor mounting bolt with a wrench.

5. Remove:
● Cylinder head

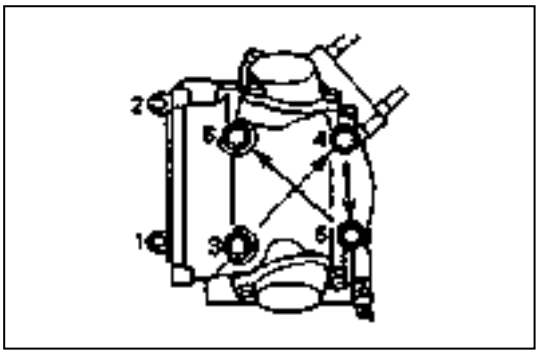

NOTE:
●Loosen the nuts in their proper loosening sequence.
●Start by loosening each nut 1/2 turn until all are loose.

CYLINDER HEAD INSPECTION:

1. Eliminate:
●Carbon deposits
(from combustion chambers)
Use a rounded scraper.
NOTE:
Do not use a sharp instrument to avoid damaging or scratching:
●Spark plug threads
●Valve seats

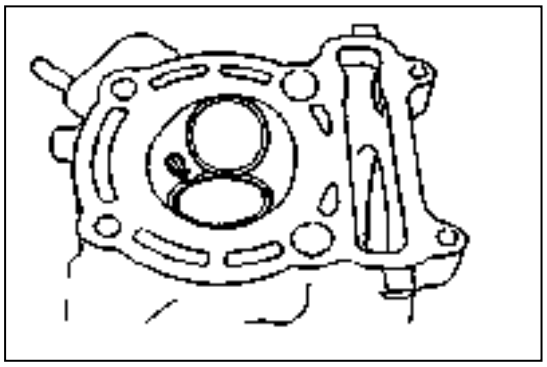

2. Inspect:
●Cylinder head
Scratches/damage → Replace.

3. Measure:
●Cylinder head warpage
Out of secification → Resurface .

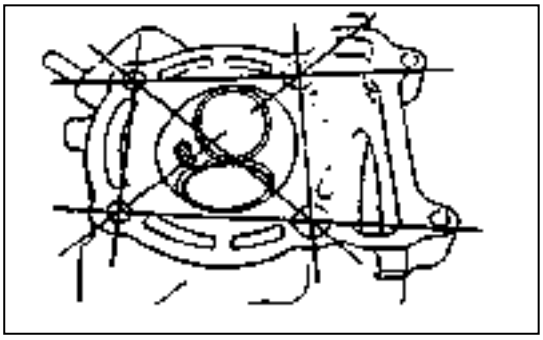

	Cylinder head warpage : Less than 0.03 mm

Warpage measurement and resurfacement steps:
●Place a straight edge and a feeler gauge across the cylinder head.
●Measure the warpage.
If the warpage is out of specification, resurface the cylinder head.
● Place a 400 ~ 600 grit wet abrasive pape on the surface plate, and resurface the head using a figure eight sanding patten.

NOTE:
Rotate the cylinder head several times for an even resurfacement.

CYINDER HEAD INSTALLATION
1. Install:
●Gasket (cylinder head) NEW
●Dowel pins
●Cylinder head

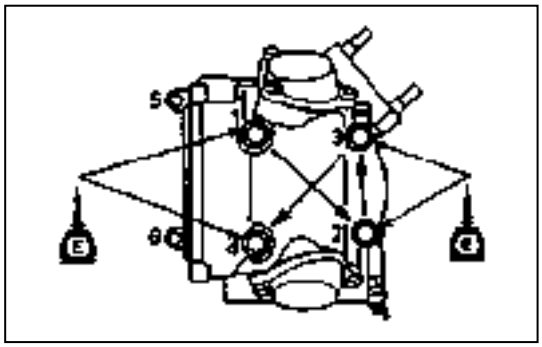

NOTE:
●Apply engine oil onto the nut threads.
●Tighten the nuts in a crisscross pattern.

2. Tighten:
●Nuts (cylinder head) 22Nm(2.2m·kg)
●Bolts (cylinder) 10Nm(1.0m·kg)
3. Install:
●Cam sprocket ①
●Timing chain ②

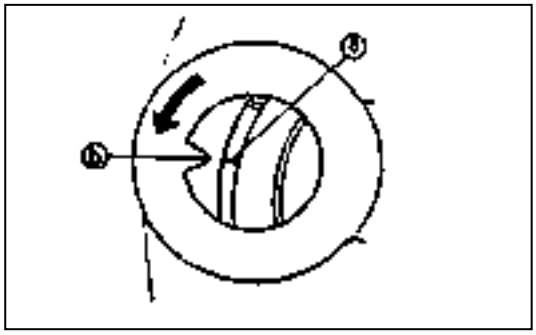

Installing steps :
●Turn the primary sheave counterclockwise until the TDC mark ⓐ matches the stationary pointer ⓑ.
●Align the "I" mark ⓒ on the cam sprocket with the stationary pointer ⓓ on the cylinder head.

NOTE: If any special mark found, contact the UTV manufacture via the agent for the parts and special instruction.

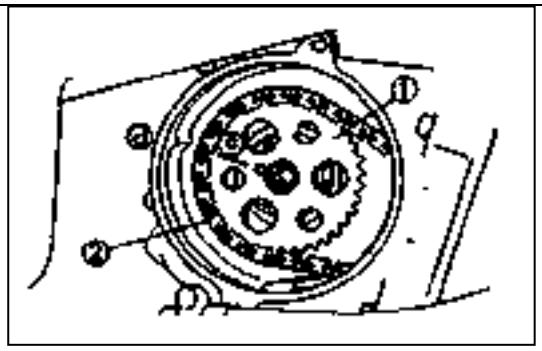

●Fit the timing chain onto the cam sprocket and install the cam sprocket on the camshaft.

NOTE:
●When installing the cam sprocket, keep the timing chain as tense as possible on the exhaust side.
●Align the match mark ⓒ on the cam sprocket with the stationary pointer ⓓ on the cylinder head.
●Align the pin on the cam shaft with the slot in the cam sprocket.

CAUTION:
Do not turn the crankshaft during installation of the cam shaft. Dam age or improper valve timing will result.
●While holding the camshaft, temporarily tighten the bolts .
●Remove the safety wire from the timing chain.

4. Install:
●Breather plate ①
●Plane washer ②

5. Install:
●Timing chain tensioner

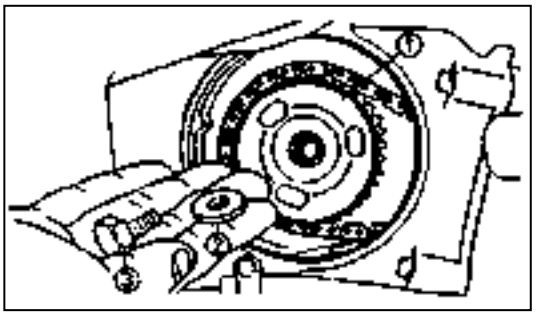

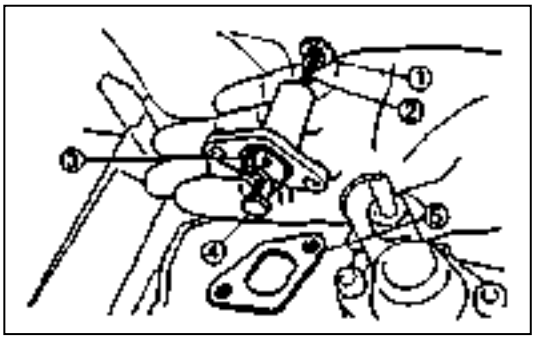

Installing steps:
●Remove the tensioner cap bolt ① and springs ②.
●Release the timing chain tensioner one-w ay cam ③ and push the tensioner rod ④ all the way in.
●Install the tensioner with a new gasket ⑤onto the cylinder.
●Install the springs ② and cap bolt ①.
●Tighten the bolt (with gasket) to the specified torque .

Bolt (chain tensioner) 10Nm(1.0m·kg)
Cap bolt (timing chain tensioner) 8Nm(0.8m·kg)

6. Tighten:
●Bolt (cam sprocket)
7. Check:
●Valve timing
Out of alignment → Adjust.
8. Check:
●Valve clearance
Out of specification → Adjust.
Refer to the "VALVE CLEARANCE ADJUSTMENT"section.

3.4 CAMSHAFT AND ROCKER ARMS

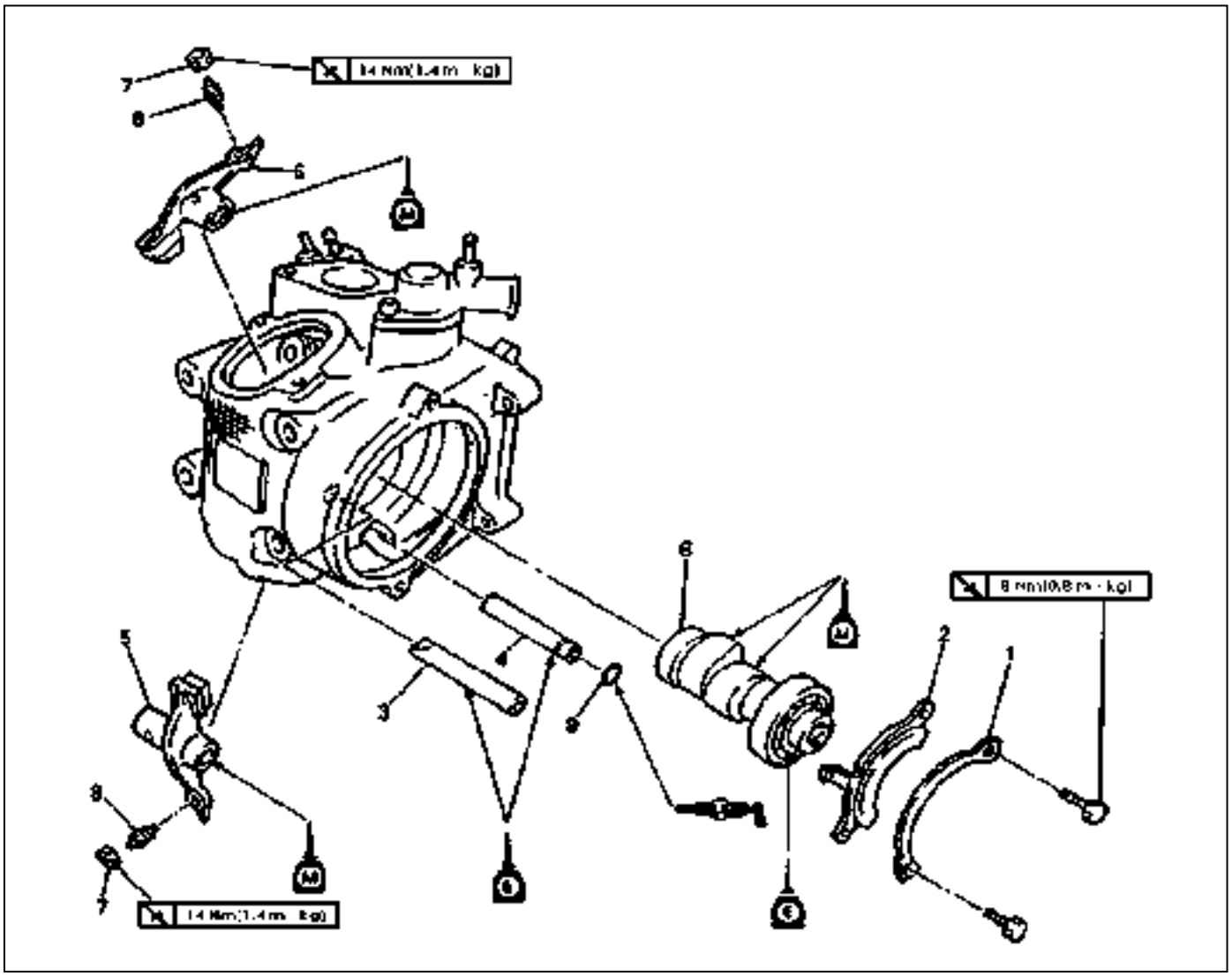

Order	Job name/Part name	Q 'ty	Remarks
	Cam shaft and rocker arms removal		Remove the parts in order. Refer to "CYLINDER HEAD" section.
	Cylinder head		
1	Lock washer	1	
2	Plate	1	Refer to "ROCKER ARM AND ROCKER SHAFT REMOVAL AND INSTALLATION" section..
3	Rocker arm shaft (intake)	1	
4	Rocker arm shaft (exhaust)	1	
5	Rocker arm	2	
6	Camshaft	1	Refer to "CAMSHAFT INSTALLATION" section .
7	Locknut	2	
8	Adjuster	2	
9	O-ring	1	
			Reverse the removal procedure for installation

ROCKER ARM AND ROCKER ARM SHAFTRE MOVAL

1. Remove:
- Rocker arm shaft (intake)
- Rocker arm shaft (exhaust)

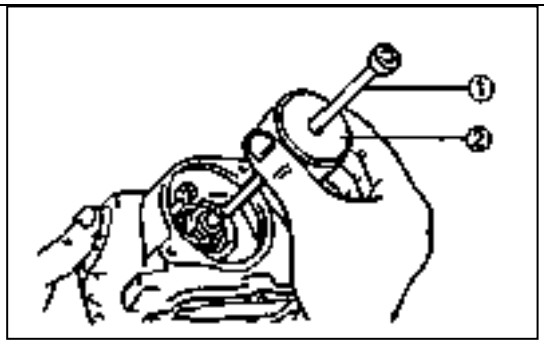

NOTE:
Attach a rocker arm shaft puller bolt ① and weight ② to the rocker arm shaft and slide out the shaft.

CAM SHAFT INSPECTION

1. Inspect:
- Cam lobes

Pitting/Scratches/Blue discoloration → Replace .

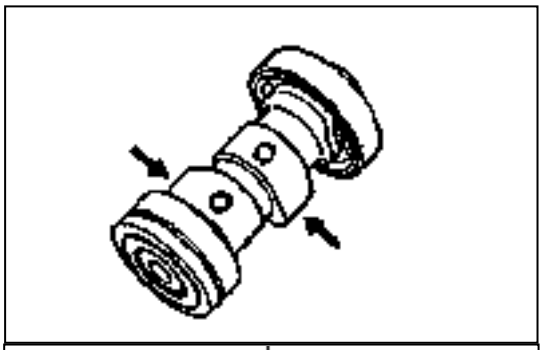

2. Measure:
- Cam lobes length ⓐ and ⓑ

Out of specification → Replace.

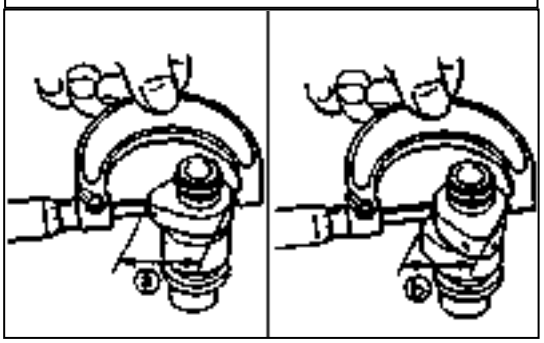

Cam lobes length:
Intake:
ⓐ 36 .545- 36 .645 mm
<Lim it: 36.45 mm>
ⓑ 30.021-30.121 mm
<Lim it: 29.92 mm>
Exhaust:
ⓐ 36 .547- 36 .647 mm
<Lim it: 36.45 mm>
ⓑ 30.067- 30.167 mm
<Lim it: 29.97 mm>

3. Inspect:
- Cam shaft oil passage

Stuffed → Blow out oil passage with compressed air.

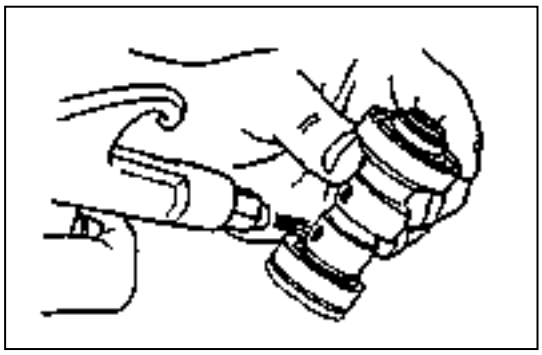

ROCKER ARMS AND ROCKER ARM SHAFTS INSPECTION

1. Inspect:
- Cam lobe contact surface ①
- Adjuster surface ②

Wear/Pitting/Scratches/Blue discoloration→ Replace.

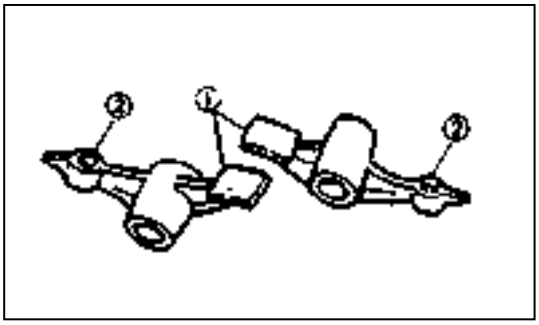

Inspection steps:

●Inspect the two contact areas on the rocker arms for signs of unusual wear.

●Rocker arm shaft hole.

●Cam-lobe contact surface.

Excessive wear → Replace.

●Inspect the surface condition of the rocker arm shafts.

Pitting/scratches/blue discoloration → Replace or check lubrication.

●Measure the inside diameter A of the rocker arm holes.

Out of specification → Replace.

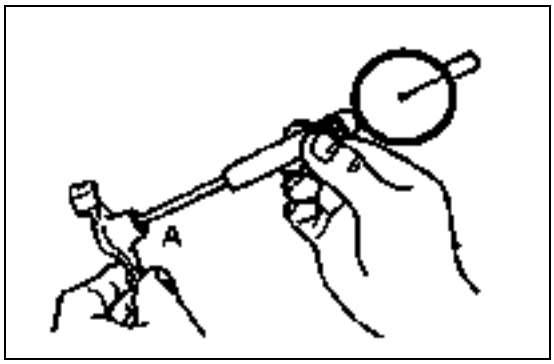

	Inside diameter (rocker arm): 12.000- 12.018mm < Lim it: 12.030 mm >

● Measure the outside diameter B of the rocker arm shafts.

Out of specification → Replace.

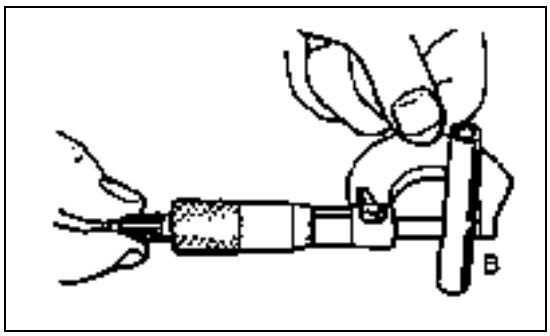

	Outside diameter(rocker arm shaft): 11.981-11.991 mm <Lim it: 11.95 mm>

CAMSHAFT AND ROCKER ARM INSTALLATION

1. Lubricate:

●Cam shaft ①

	Camshaft: Molybdenum disulfide oil Camshaft bearing: Engine oil

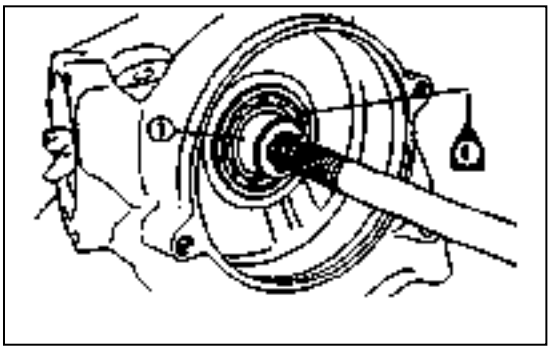

2. Install:

●Plate①

●Lockwasher ② NEW

●Bolt ③ 8Nm(0.8m·kg)

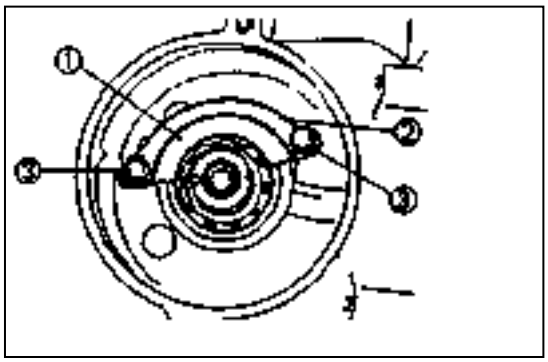

NOTE:

Bend the lockwasher tabs along the bolt ③ falts.

3. Apply:

●Molybdenum disulfide oil onto the rocker arm and rocker arm shaft.

	Molybdenum disulfide oil

4. Install:
●Rocker arm ①
●Rocker arm shaft ② (exhaust)

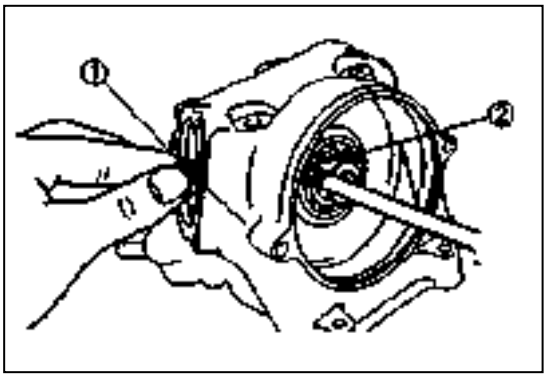

NOTE:
Exhaust:
Install the rocker arm shaft (exhaust) completely pushed in.

5. Install:
●Rocker arm ①
●Rocker arm shaft ② (intake)

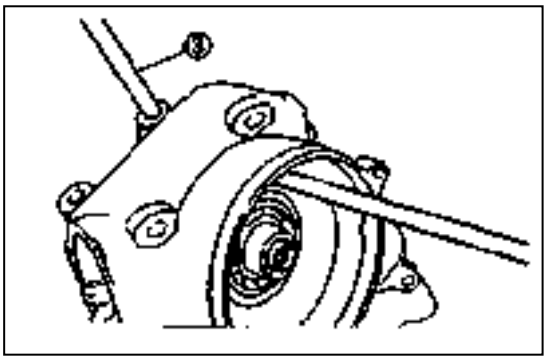

NOTE:
Intake:
Insert the guide shaft (8 mm) ③ into the stud bolt hole in the cylinder head to the rocker arm shaft (intake).

CAUTION:
Do not confuse the installation direction of rocker arm shaft. Be sure to install the threaded part facing outward.

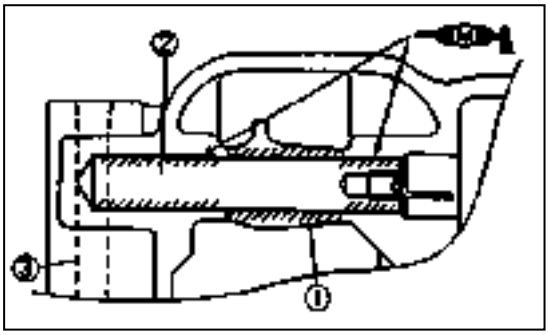

3.5 VALVES AND VALVE SPRINGS

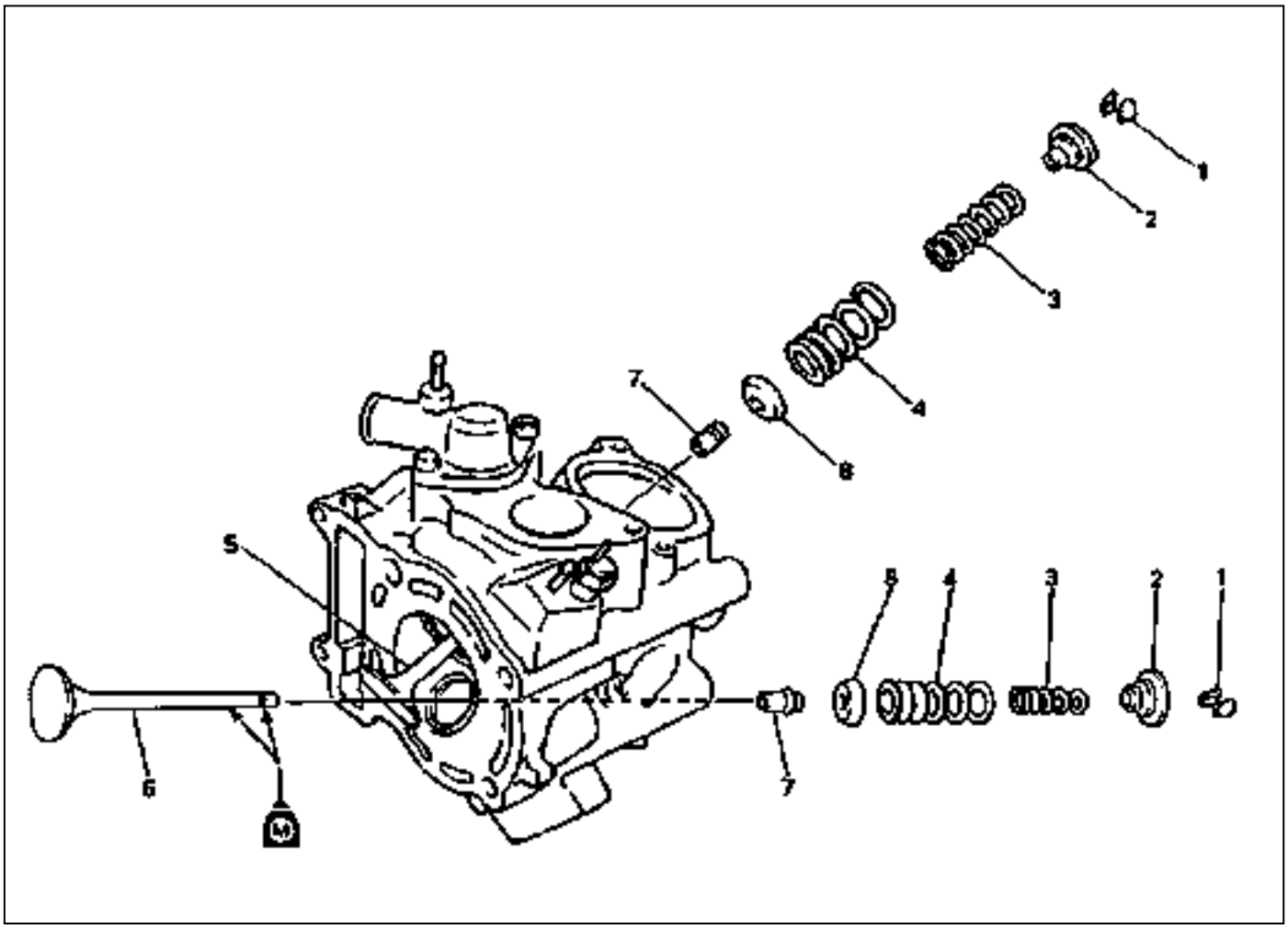

Order	Job name / Part name	Q 'ty	Remarks
	Valves and valve springs removal		Remove the parts in order.
	Cylinder head		Refer to "CYLINDER HEAD " section .
	Rocker arm , rocker arm shaft		Refer to "ROCKER ARM SHAFT AND ROCKER ARMS" section.
1	Valve cotters	4	Refer to "VALVES AND VALVE SPRINGS REMOVAL/INSTALLATION" section.
2	Spring retainer	2	
3	Valve spring (inner)	2	
4	Valve spring (Outer)	2	Refer to "VALVES AND VALVE SPRINGS INSTALLATION" section
5	Valve (intake)	1	
6	Valve (exhaust)	1	
7	Valve guide	2	
8	Spring seat	2	
			Reverse the removal procedure for installation

VALVES AND VALVE SPRINGS REMOVAL

1. Remove:
● Valve cotters ①

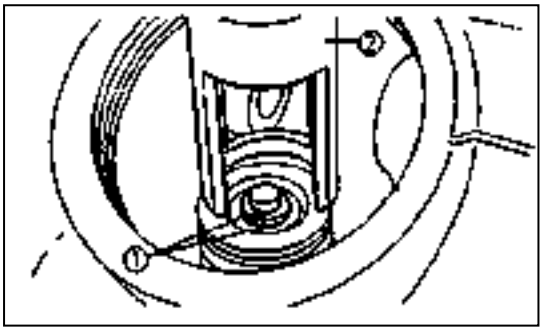

NOTE:
Attach a valve spring compressor and attachment ② between the valve spring retainer and cylinder head to remove the valve cotters.

CAUTION:
Do not compress so much as to avoid damage to the valve spring.

VALVE AND VALVE SPRINGS INSPECTION

1. Measure:
●Valve stem diameter
Out of specification → Replace.

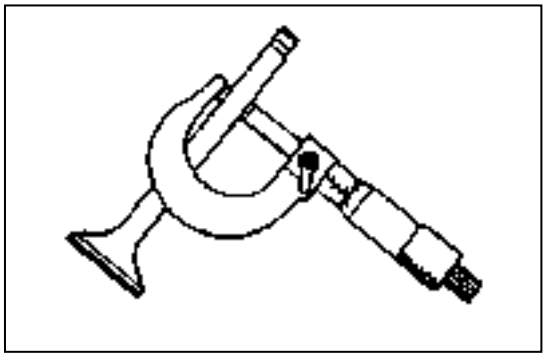

	Valve stem diameter: **Intake:** **5.975-5.990mm** **<Limit: 5.94mm>** **Exhaust:** **5.960-5.975mm** **<Limit: 5.92mm>**

2. Measure:
●Runout (valve stem)
Out of specification → Replace.

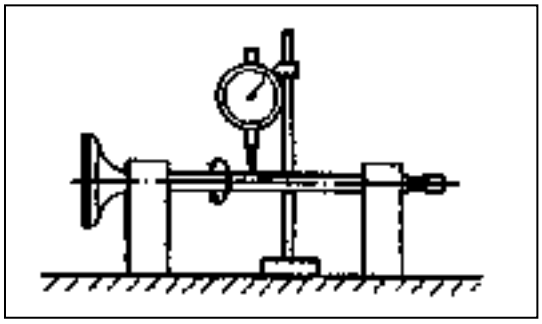

	●Runout limit: **0.01 mm**

3. Measure:
●Free length (valve spring)
Out of specification → Replace.

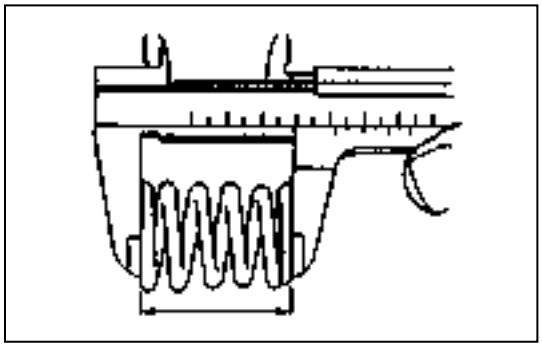

	Valve spring free length: **Inner spring:** **38.1 mm** **<Limit: 36.1mm>** **Outer spring:** **36.93 mm** **<Limit: 35.0mm>**

4. Measure:
●Spring tilt
Out of specification → Replace.

	Spring tilt limit: 1.7mm (2.5°)

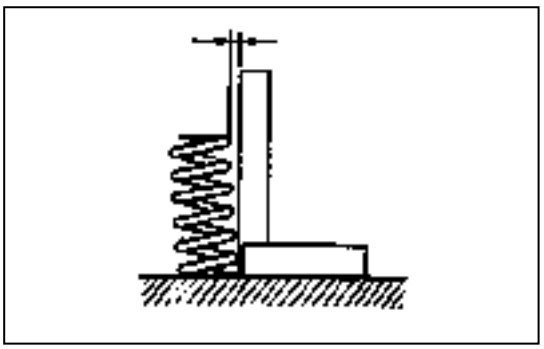

5. Inspect:
● Spring contact face
Wear/Pitting/Scratches → Replace.

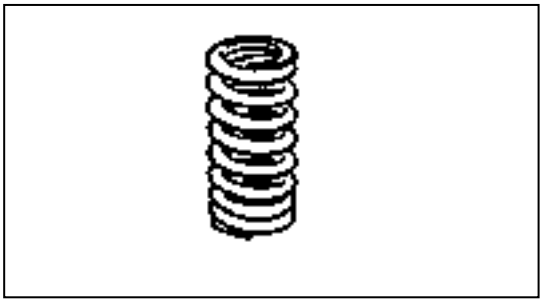

6. Measure:
●Valve guide inside diameter
Out of specification → Replace.

	Valve guide inside diameter: **Intake:** **6.000-6.012 mm** **<Limit: 6.05mm>** **Exhaust:** **6.000-6.012 mm** **<Limit: 6.05 mm>**

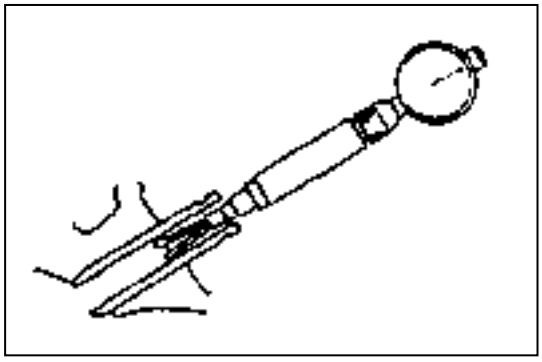

7. Measure:

Stem-to guide clearance= **Valve guide inside diameter-** **Valve stem diameter**

Out of specification → Replace the valve guide.

	Stem-to-guide clearance limit: **Intake:** **0.08 mm** **Exhaust:** **0.10 mm**

VALVE SEATS INSPECTION
1. Eliminate:
●Carbon deposits
(from the valve face and valve seat)
2. Inspect:
●Valve seats
Pitting/wear → Reface the valve seat.

3. Measure:
●Valve seat width ⓐ
Out of specification → Reface the valve seat.

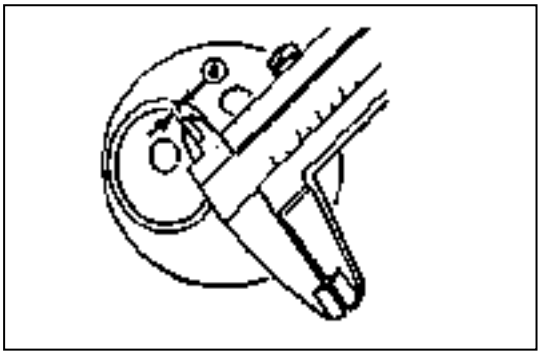

Valve seat width: **Intake:** **0.9-1.1mm** **<Limit:1.6mm>** **Exhaust:** **0.9-1.1mm** **<Limit:1.6mm>**

Measurement step:
●Apply Mechanic's blueing dye (Dykem) ① to the valve face.
●Install the valve into the cylinder head.
Press the valve through the valve guide and onto the valve seat to make a clear pattern.
●Measure the valve seat width. Where the valve seat and valve face made contact, blueing will have been removed.
●If the valve seat is too wide, too narrow, or the seat is not centered, the valve seat must be replaced.

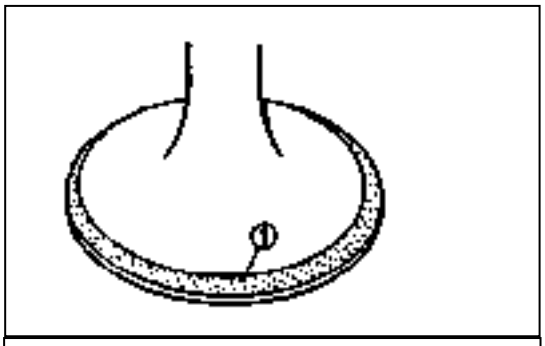

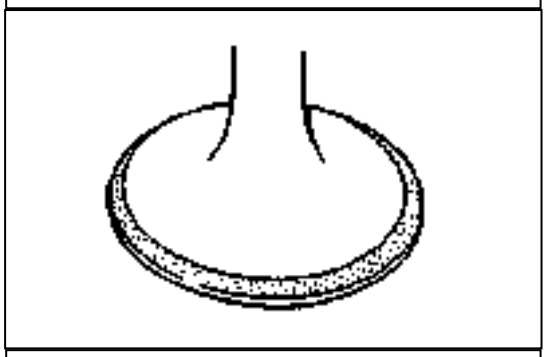

4. Lap:
●Valve face
●Valve seat
NOTE:
After replacing the valve seat, valve and valve guide, the valve seat and valve face should be lapped.

Lapping steps:
●Apply a coarse lapping com pound ⓐ to the valve face.

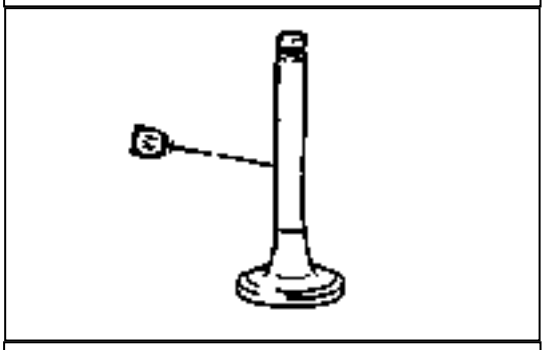

CAUTION:
Do not let compound enter the gap between the valve stem and the guide.

●Apply molybdenum disulfide oil to the valve stem.
●Install the valve into the cylinder head.
●Turn the valve until the valve face and valve seat are evenly polished, then clean off al com pound.
NOTE:
For best lapping results, lightly tap the valve seat while rotating the valve back and forth between your hand.

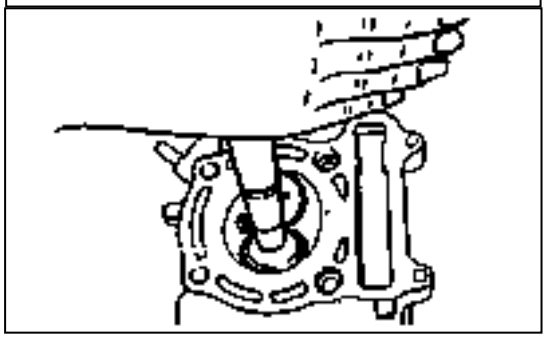

●Apply a fine lapping compound to the valve face and repeat the above steps.

NOTE:
Make sure to clean off all compound from the valve face and valve seat after every lapping operation.

●Apply Mechanic's blueing dye (Dykem) ⓑ to the valve face.
●Install the valve into the cylinder head.
●Press the valve through the valve guide and onto the valve seat to make a clear pattern.
●Measure the valve seat with ⓒ again.

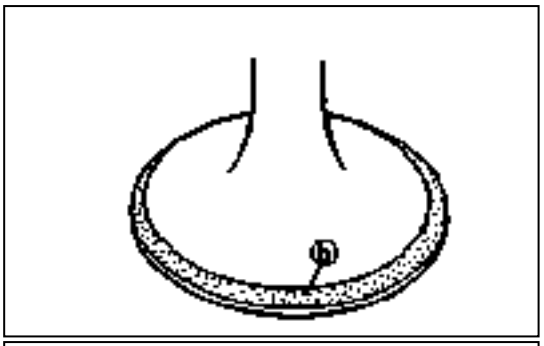

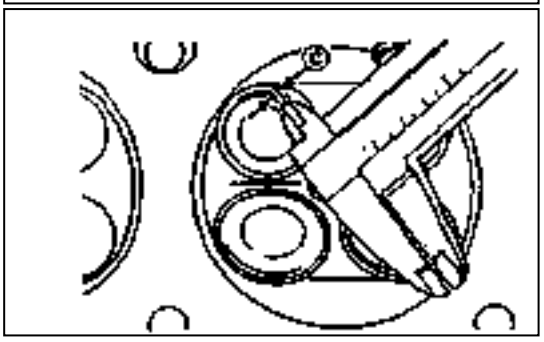

VALVES AND VALVE SPRINGS INSTALLATION
1. Deburr:
●Valve stem end
Use an oilstone to smooth the stem end.
2. Apply:
●Molybdenum disulfide oil
(onto the valve stem③ and oil seal ②)

	Molybdenum disulfide oil

3. Install:
●Valve spring seat ①
●Valve stem seal②NEW
●Valve ③
(into the cylinder head)
●Valve spring (under) ④
●Valve spring (outer) ⑤
●Spring retainer ⑥

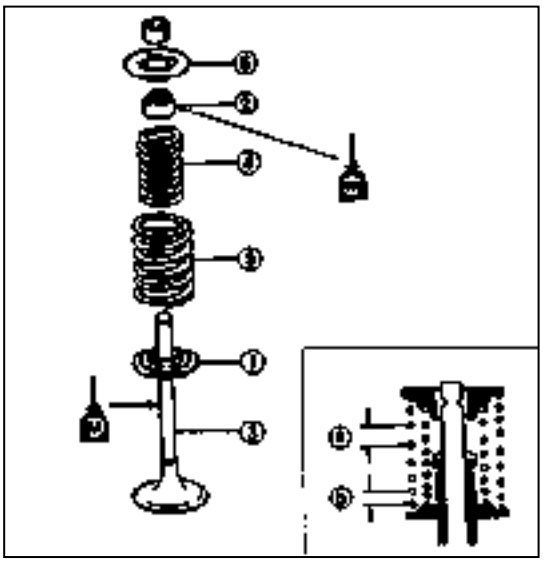

NOTE:
Install the valve spring with the larger pitch ⓐ facing upwards.
ⓑ Smaller pitch

4. Instal:
●Valve cotters ①

NOTE:
Install the valve cotters while com pressing the valve spring with a valve spring compressor and attachment ②.

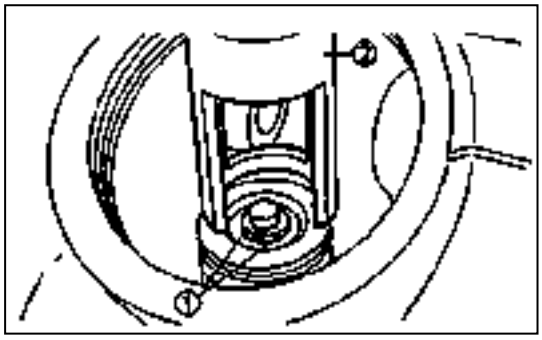

5. Secure the valve cotters onto the valve stem by tapping lightly with a piece of wood.

CAUTION:
Do not hit so much as to damage the valve.

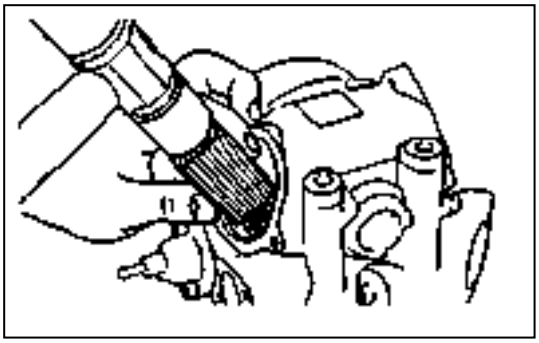

3.6 CYLINDER AND PISTON

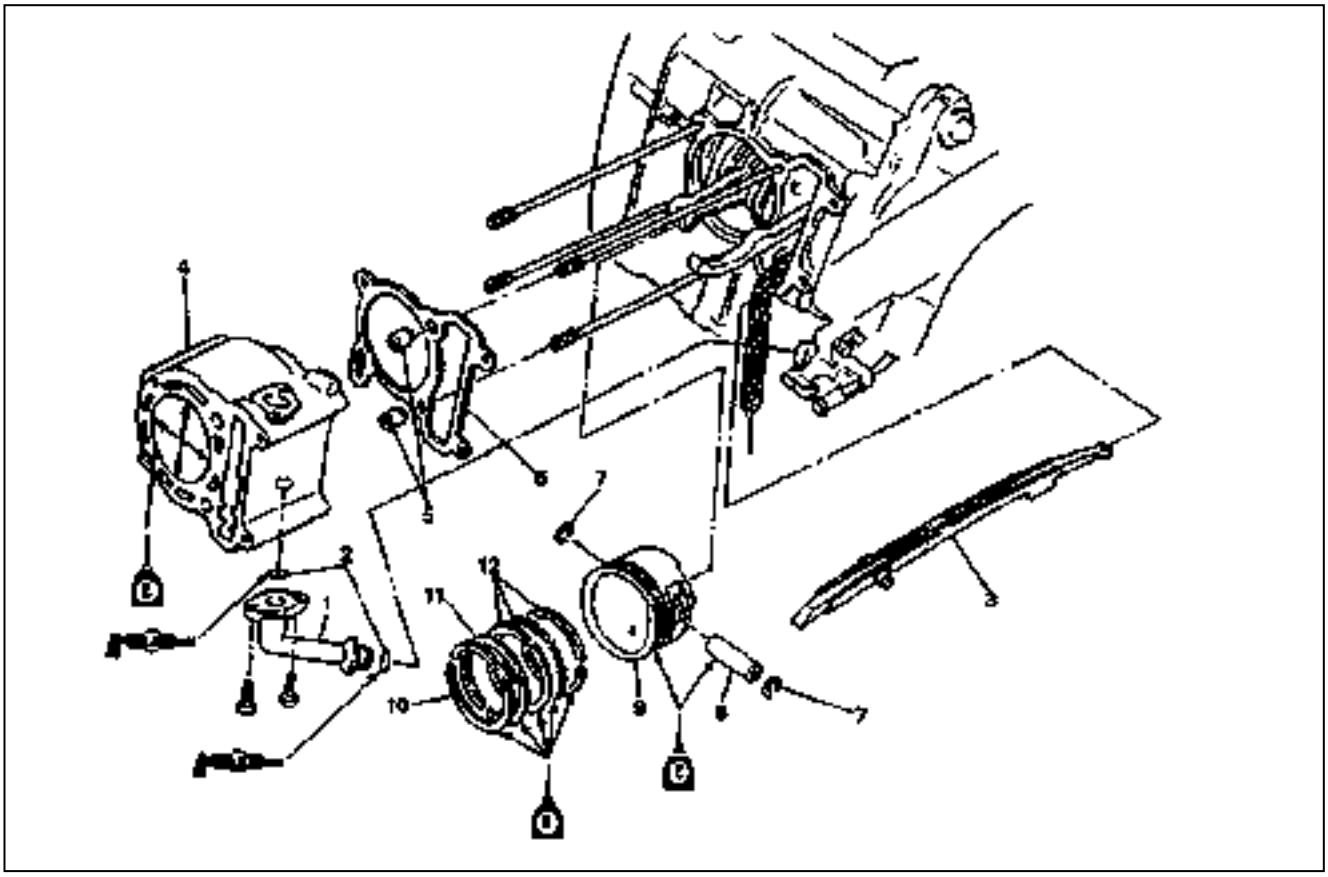

Order	Job name / Part name	Q 'ty	Remarks
	Cylinder and piston removal		Remove the parts in order.
	Cylinder head		Refer to " CYLINDER HEAD " section .
1	Joint	1	
2	O-ring	2	
3	Timing chain guide (exhaust side)	1	Refer to " PISTON RINGS, PISTON AND CYLINDER INSTALLATION" section.
4	Cylinder	1	
5	Dowel pin	2	
6	Cylinder gasket	1	
7	Piston pin circlip	2	Refer to "PISTON AND PISTON RINGS REMOVAL" section .
8	Piston pin	1	
9	Piston	1	
10	Piston ring (top)	1	Refer to "PISTON RINGS, PISTON AND CYLINDER INSTALLATION " section .
11	Piston ring (2nd)	1	
12	Side rail/Spacer	2/1	
			Reverse the removal procedure for installation .

PISTON AND PISTON RINGS REMOVAL

1. Remove:
- Piston pin circlip ①
- Piston pin ②
- Piston ③

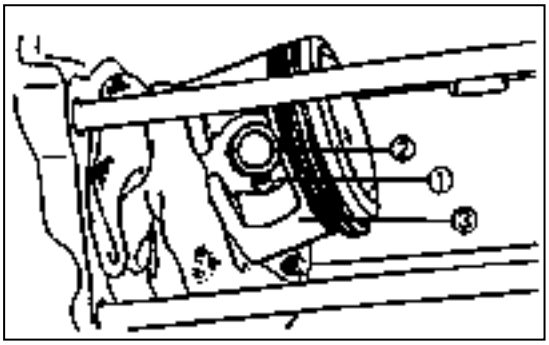

NOTE:
Before removing the piston pin circlip, cover the crankcase opening with a clean tow el or rag to prevent the circlip from falling into the crankcase cavity.

2. Remove:
- Top ring
- 2nd ring
- Oil ring

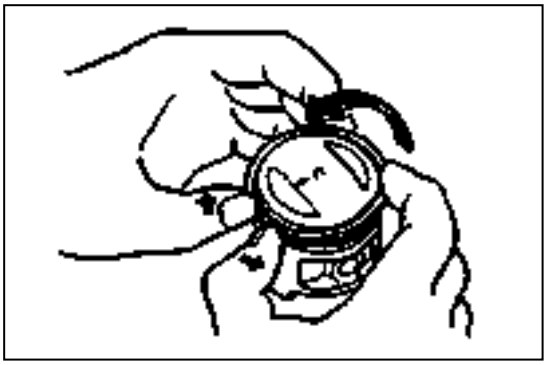

NOTE:
When removing the piston ring, open the end gap of the ring by fingers, and push up the other side of the ring.

CYLINDER INSPECTION

1. Measure:
- Cylinder bore

Out of specification → Rebore or replace.

NOTE:
- Measure the cylinder bore with a cylinder bore gauge.
- Measure the cylinder bore in parallel to and a right angle to the crankshaft. Then, find the average of the measurements.

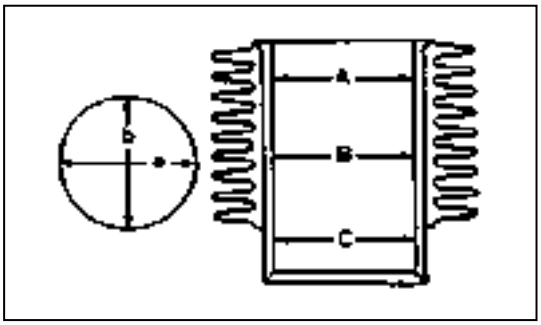

	Cylinder bore: **70.000- 70.014mm** **< Limit:70.025mm>** **< Difference limit between A,B and C :0.03m m >**

2. Measure:
- Warpage

Out of specification → Replace.

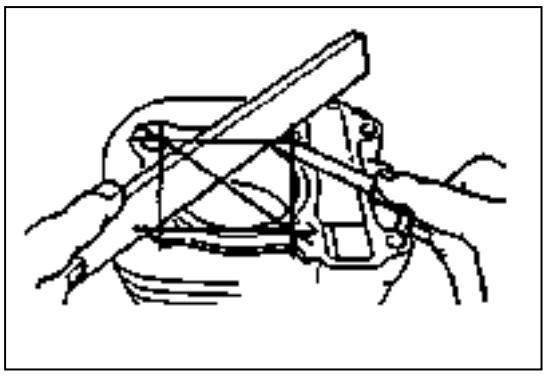

	Cylinder warpage limit: 0.03mm

PISTON AND PISTON PIN INSPECTION

1. Measure:
●Piston skirt diameter
Out of specification → Replace .
ⓐ 5.0mm from the piston bottom edge.

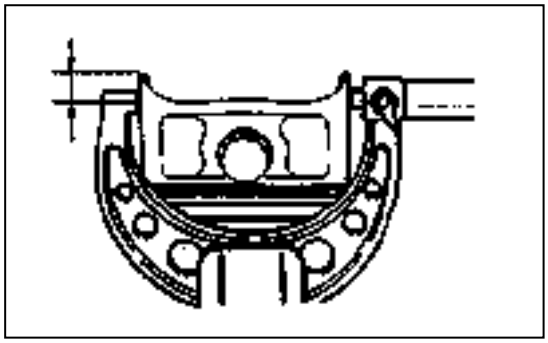

	Valve skirt diameter: 69.965-69.980 mm

2. Calculate:
●Piston-to-cylinder clearance

Piston-to-cylinder clearance= Cylinder bore-Piston skirt diameter

Refer to “CYLINDER” section for cylinder bore measurement.
Out of specification → Replace the piston and piston rings as a set.

	Piston-to-cylinder clearance: 0.02-0.04mm

3. Measure:
●Piston pin bore diameter
Out of specification → Replace.

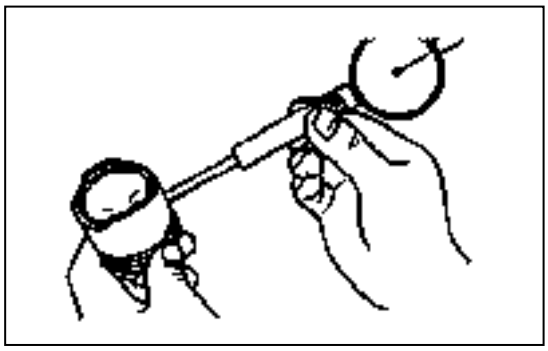

	Piston pin bore diameter: 17.004-17.015mm <Limit:17.045mm>

4. Measure:
●Piston pin outside diameter
Out of specification → Replace.

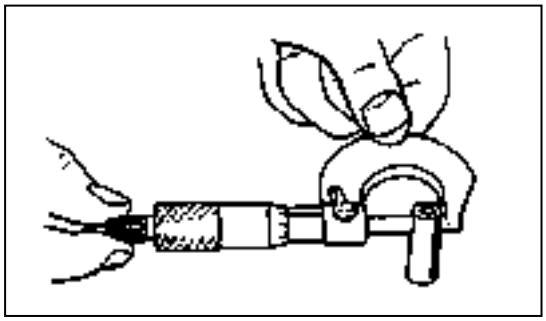

	Piston pin bore diameter: 16.991-17.000mm <Limit:16.975mm>

5. Inspect:
●Piston pin
Blue discoloration/groove → Clean or replace.

PISTON RINGS INSPECTION

1. Measure:

●Side clearance ①

Out of specification → Replace the piston and the piston rings as a set.

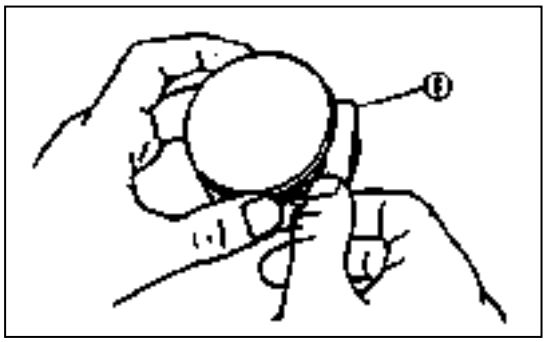

NOTE:

Eliminate the carbon deposits from the piston ring grooves and rings before measuring the side clearance.

Side clearance (piston ring):
Top ring:
0.04- 0.08m m
<Limit: 0.12mm>
2nd ring:
0.03 - 0.07mm
<Limit: 0.12mm>

2.Position:

●Piston ring into the cylinder

NOTE :

Push the ring with the piston crown so that the ring will be at a right angle to the cylinder bore.

① 5.0mm

3. Measure:

●End gap

●Out of specification → Replace.

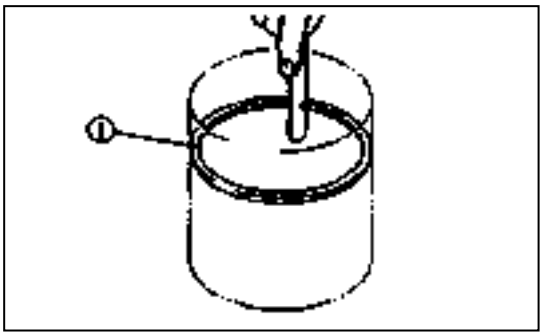

NOTE:

You cannot measure the end gap on the expander spacer of the oil ring. If the oil ring rails show excessive gap, replace all three rings.

End gap:
Top ring:
0.15-0.30mm
<Limit:0.45mm>
2nd ring:
0.30-0.45mm
<Limit:0.70m m>
Oil ring:
0.20-0.70mm

PISTON RINGS, PISTON AND CYLINDER INSTALLATION

1. Install:

●Top ring ①

●2nd ring ②

●Side rails (oil ring) ③

●Expander spacer (oil ring) ④

NOTE:

●Make sure to install the piston rings so that the manufacturer's m arks or numbers are located on the upper side of the rings.

●Lubricate the pistons and piston rings liberally with engine oil.

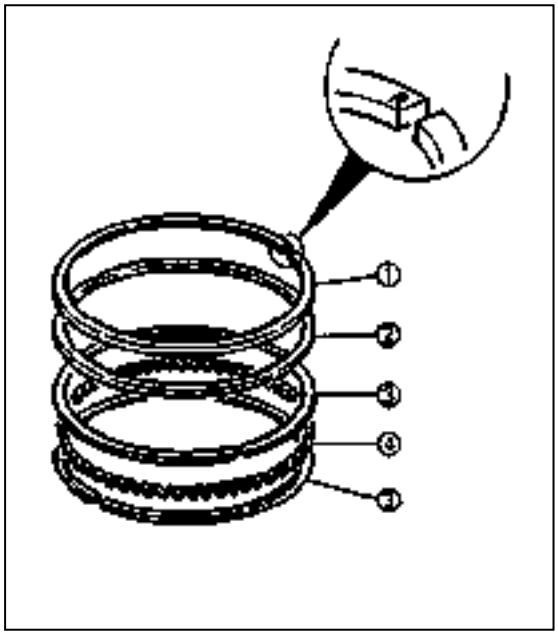

2.Install:

●Piston ①

●Piston pin ②

●Piston pin clip ③ NEW

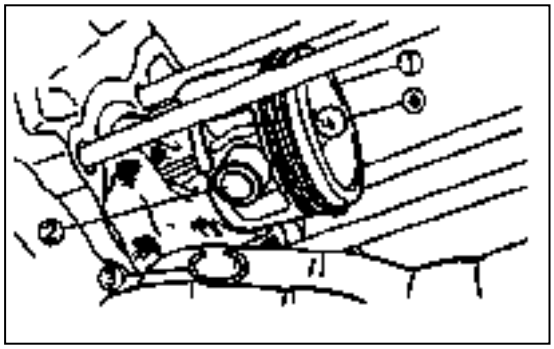

NOTE:

●Apply engine oil to the piston pins.

●The " → " mark ⓐ on the piston must face the exhaust side of the cylinder.

●Before installing the piston pin clip, cover the crankcase opening with a clean rag to prevent the piston pin clip from falling into the crankcase.

●Make sure to install each piston in its respective cylinder.

3. Install:

●Gasket (cylinder) NEW

●Dowel pins

4. Position:

●Piston rings

NOTE:

Offset the piston ring end gaps as shown.

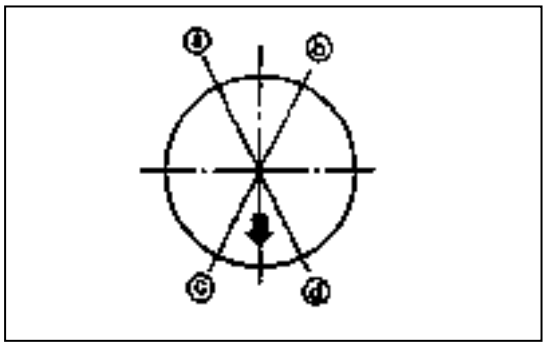

ⓐ Top ring end

ⓑ Oil ring end (lower)

ⓒ Oil ring end (upper)

ⓓ 2nd ring end

5. Lubricate:
- Piston outer surface
- Piston ring
- Cylinder inner surface

	Engine oil

6. Install:
- Cylinder

NOTE:
- Install the cylinder with one hand while com pressing the piston rings with the other hand.
- Pass the timing chain and timing chain guide (exhaust side) through the timing chain cavity.

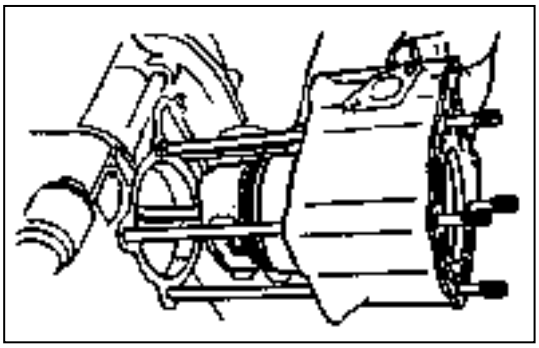

3.7 V-BELT,CLUTCH AND SECONDARY/PRIMARY SHEAVE

CRANKCASE COVER (LEFT)

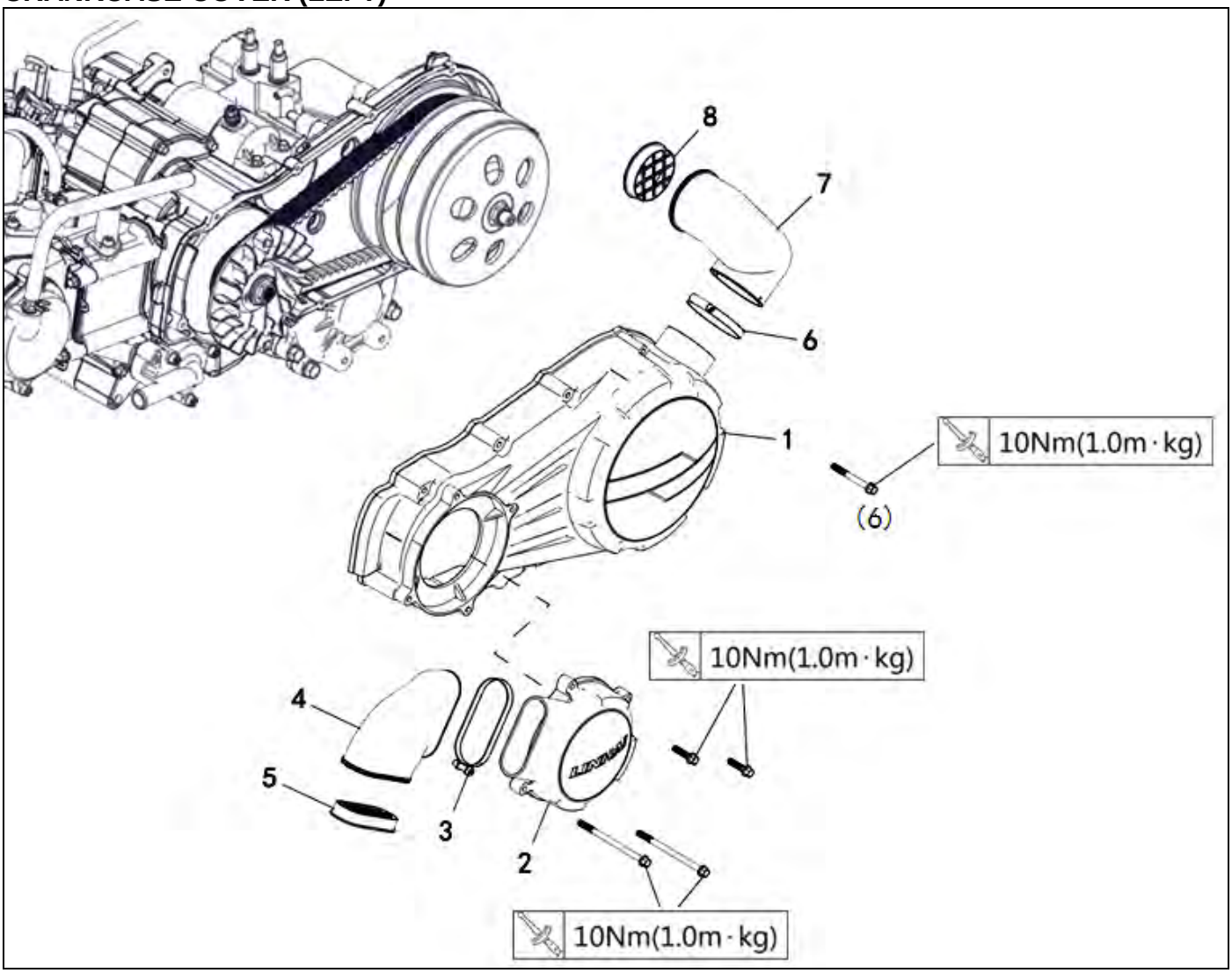

Order	Job name / Part name	Q 'ty	Remarks
	Crankcase cover (left) removal		**Remove the parts in order.**
1	Crankcase cover (left)	1	
2	Front cover	1	
3	Hose clamp B	1	
4	Joint B	1	
5	Air strainer B	1	
6	Hose clamp A	1	
7	Joint A	1	
8	Air strainer A	1	Reverse the removal procedure for installation .

PRIMARY SHEAVE

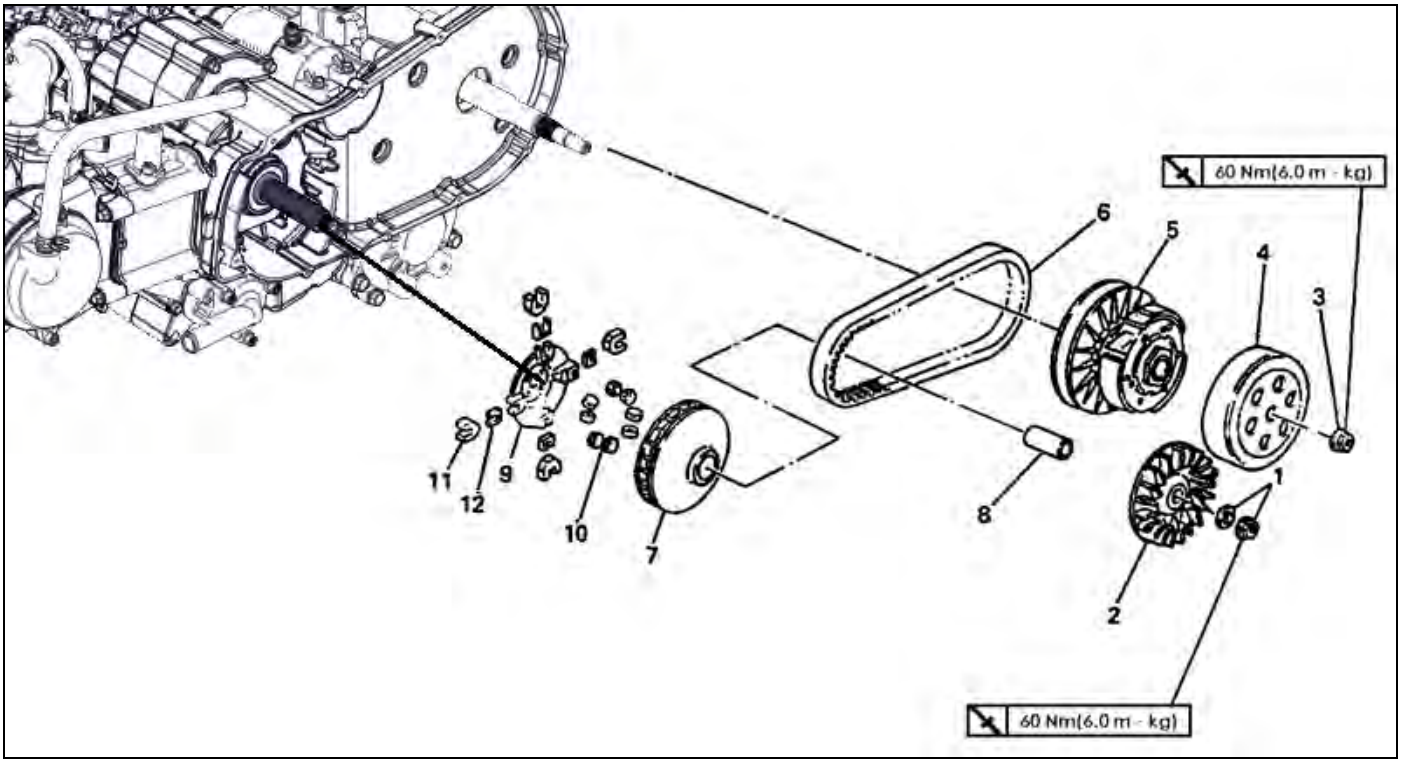

Order	Job name/ Part name	Q 'ty	Remarks
	V-belt, clutch and secondary/ primary sheave removal		Remove the parts in order
1	Nut/Plain washer	1/1	
2	Primary fixed sheave	1	
3	Nut	1	
4	Clutch housing	1	
5	Clutch assembly	1	
6	V-belt	1	
7	Primary sliding sheave	1	
8	Collar	1	
9	Cam	1	
10	Weight	8	
11	Slider	4	
12	Spacer	4	
			Reverse the removal Procedure for installation.

SECONDARY SHEAVE

**Apply lightweight lithium-soap base grease

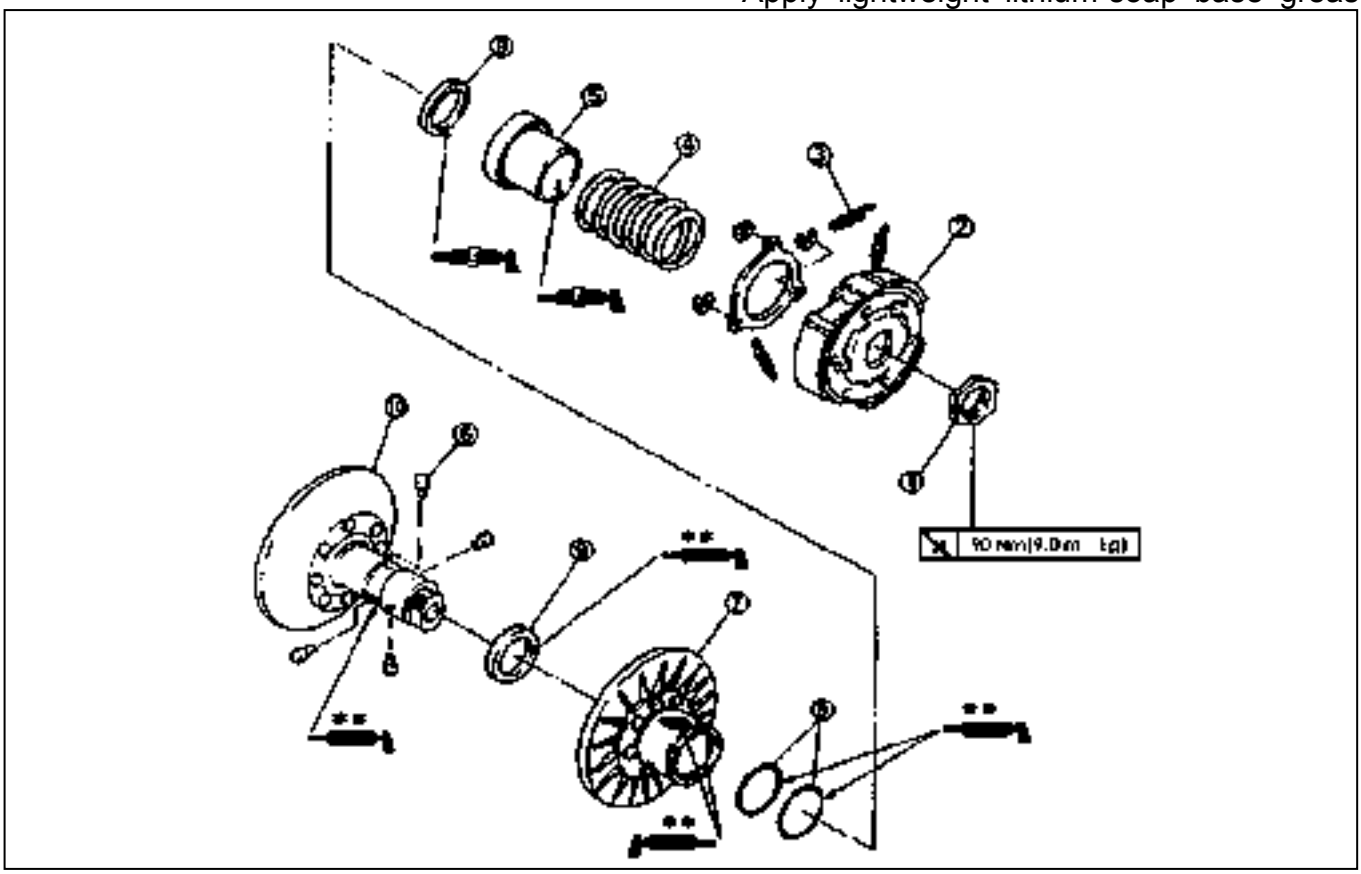

Order	Job name / Part name	Q 'ty	Remarks
	Secondary sheave disassembly		Disassemble the parts in order.
1	Nut	1	
2	Clutch carrier	1	Refer to "SECONDARY SHEAVE
3	Clutch shoe spring	3	DISASSEMBLY" section.
4	Compression spring	1	
5	Spring seat	1	Refer to "SECONDARY SHEAVE
6	Guide pin	4	INSTALLATION " section .
7	Secondary sliding sheave	1	
8	O-ring	2	Refer to "SECONDARY SHEAVE
9	Oil seal	2	INSTALLATION" section.
10	Secondary fixed sheave	1	
			Reverse the disassembly procedure for assembly.

PRIMARY SHEAVE REMOVAL

1. Remove:
- Nut ①(primary sheave)
- Plate washer
- Primary fixed sheave②

NOTE:
Loosen the nut (primary fixed sheave) while holding the primary fixed sheave with the rotor holder③.

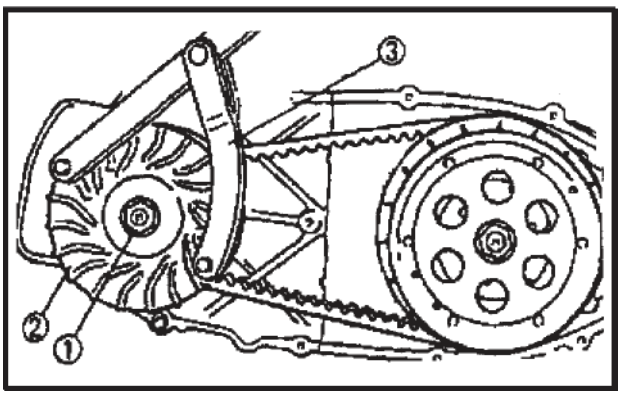

SECONDARY SHEAVE AND V-BELT REMOVAL

1. Remove:
- Nut ① (secondary sheave)
- Clutch housing ②

NOTE:
Loosen the nut (secondary sheave) while holding the clutch housing with the sheave holder③.

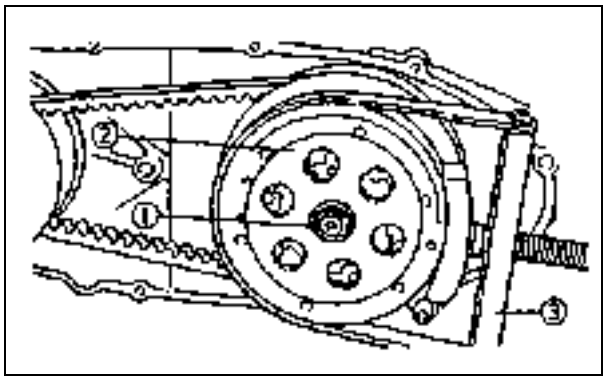

2. Remove:
- Nut ① (clutch carrier)

CAUTION:
Do not remove the nut (clutch carrier) yet.

NOTE:
Loosen the nut (clutch carrier) one turn using the locknut wrench ③ while holding the clutch carrier with the rotor holder②.

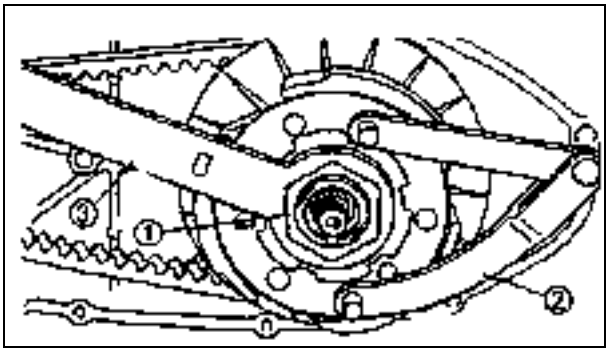

3. Remove:
- Clutch assembly ①
- V-belt ②

NOTE:
Remove the V-belt from the primary sheave side with clutch assembly.

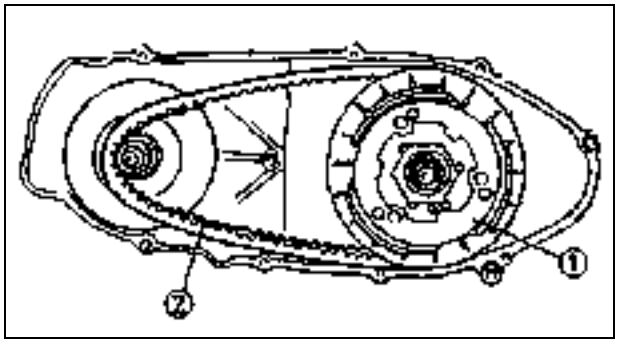

SECONDARY SHEAVE DISASSEMBLY

1. Remove:
● Nut ① (secondary sheave)

NOTE:
Loosen the nut ① while attaching the clutch spring compressor ② and clutch spring holder arm ③ and release the compressed spring after removing the nut.

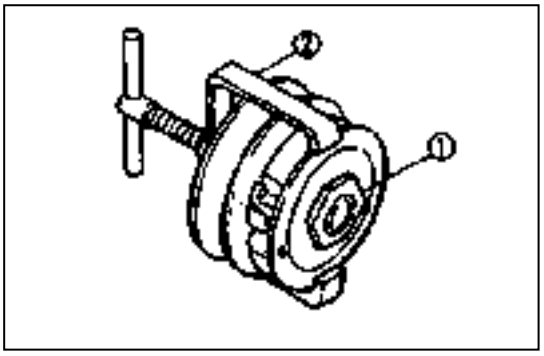

CAUTION:
Use the spacer ④ (diameter: ¢30mm thickness: 2-3mm).

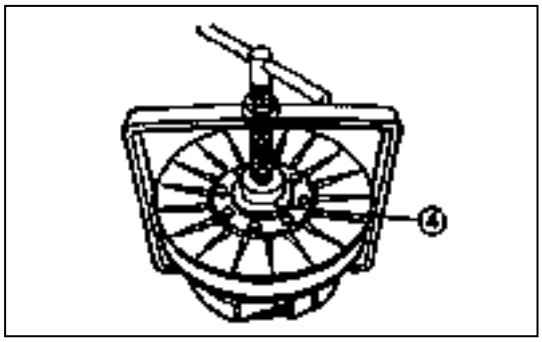

CLUTCH INSPECTION

1.Measure:
●Clutch shoe thickness
Scratches → Glaze using coarse sandpaper.
Wear /Damage → Replace

	Clutch shoe thickness: 5.5mm
	<Limit:4.0mm>

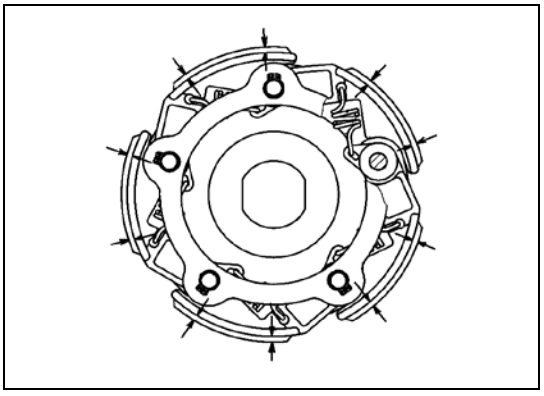

NOTE:
●After using the sandpaper, clean off the polished particles.
●Inspect the other clutch shoes.
●Replace all five as a set.

V-BELT INSPECTION

1.Inspect:
●V-belt ①
Cracks/Wear /Scaling /Chipping → Replace.
Oil/Grease → Check primary sheave and secondary sheave.

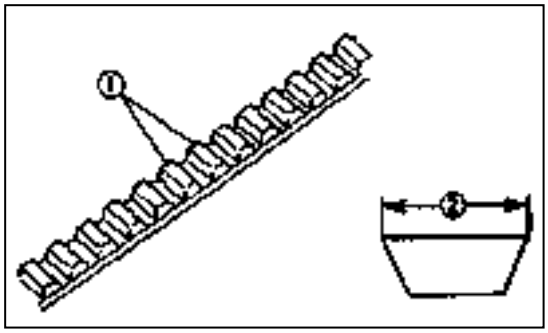

2. Measure:
●V-belt width ②
Out of specification → Replace

	V-belt width: 22.6mm
	(Limit:21.0mm)

WEIGHT INSPECTION

1. Inspect:
● Weight minimum outside diameter
Cracks/Wear /Scaling /Chipping → Replace.
Out of specification → Replace

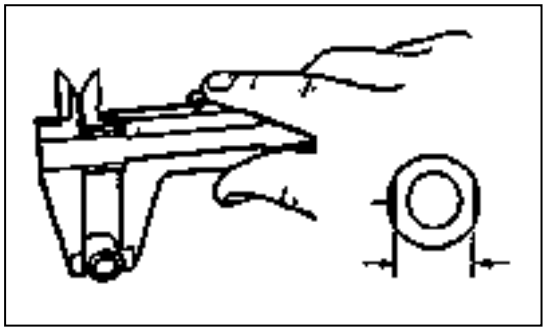

	Weight out side diameter: **20.0 mm** **<Limit: 19.5mm>**

SECOMDARY SHEAVE INSPECTION

1. Inspect:
●Secondary fixed sheave smooth operation
●Secondary sliding sheave smooth operation

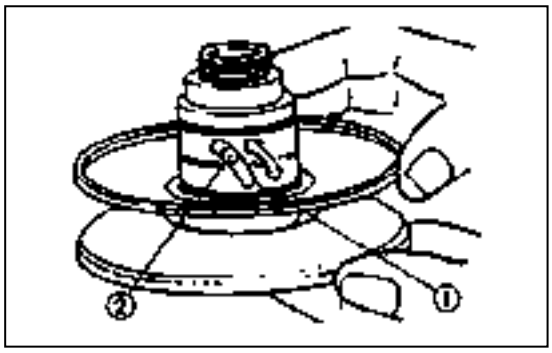

2. Inspect:
●Torque cam groove ①
Wear /Damage → Replace.

3. Inspect:
●Guide pin ②
Wear /Damage → Replace.

PRIMARY SHEAVE ASSEMEBLY

1. Clean:
●Primary sliding sheave face ①
●Primary fixed sheave face ②
●Collar ③
●Weight ④
●Primary sliding sheave cam face

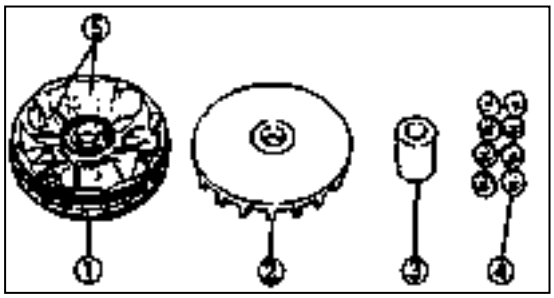

2. Install:
●Weight ①
●Collar ②

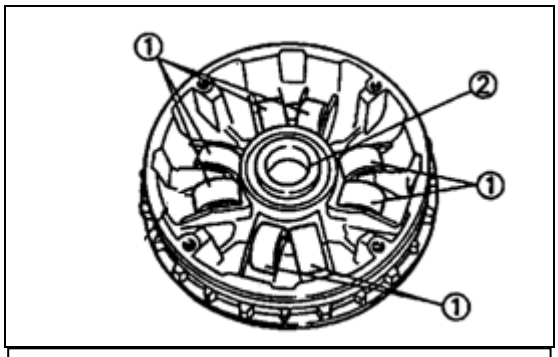

3. Install:
●Spacer ①
●Slider ②
●Cam ③
●Primary sliding sheave cap.
3Nm(0.3m·kg)

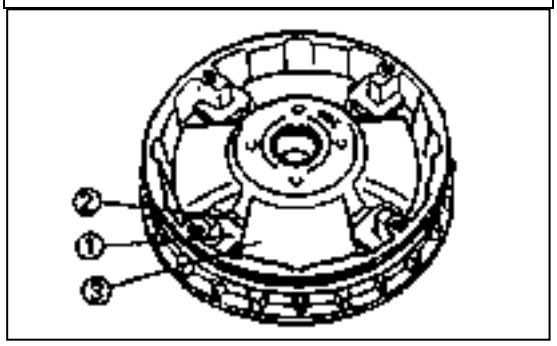

SECOMDARY SHEAVE INSTALLATION

1. Apply:
●Lightweight lithium-soap base grease
(to the secondary sliding sheave ① inner surface, grease nipple groove, and oil seals)
● Lightweight lithium-soap base grease
(to the bearings, oil seals and inner surface of the secondary fixed sheave ②)

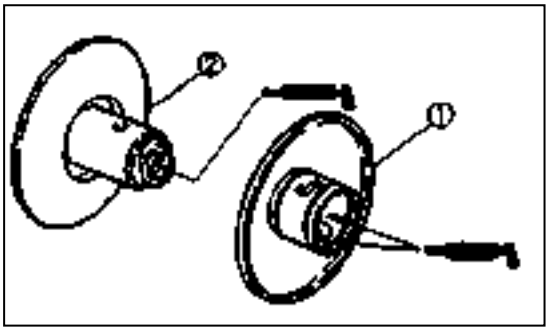

2. Install:
●Secondary sliding sheave ①

NOTE:
Install the secondary sliding sheave ①using the oil seal guide ② to the secondary fixed sheave③.

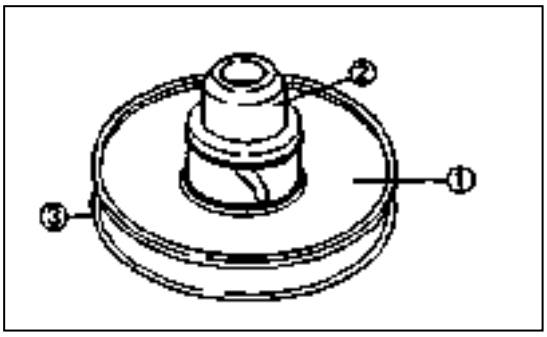

3. Install:
●Guide pin①

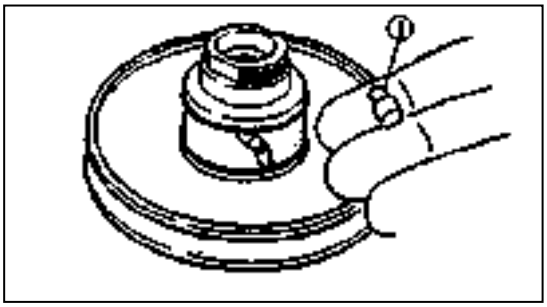

4. Apply:
● Lightweight lithium-soap base grease
(to the guide pin sliding groove ①, and oil seal ② NEW)

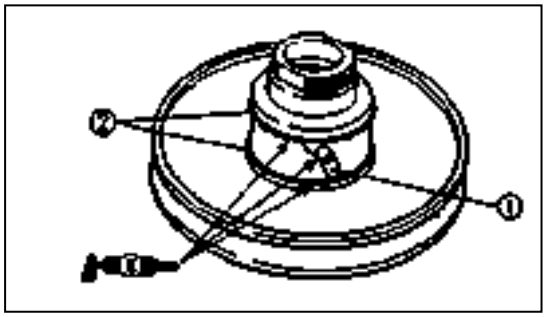

5. Install:
●Secondary sheave complete ①
●Compression spring
●Clutch carrier ②

NOTE:
Temporarily tighten the nut ⑤while attaching the clutch spring holder ③ and clutch spring holder arm ④ and compress the spring.

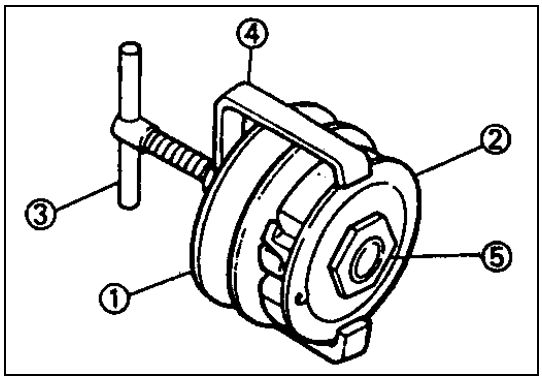

CAUTION:
Use the spacer ⑥ (30mm, thickness: 2-3mm).

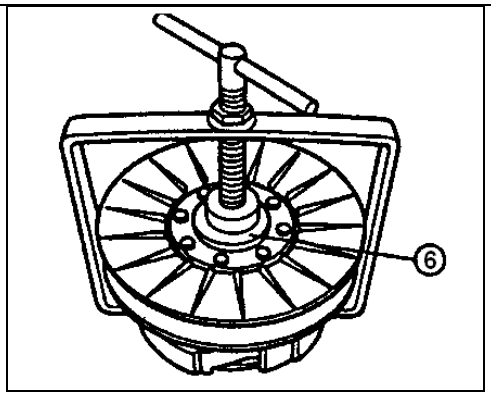

6. Install:
●V-belt ①
●Clutch assembly ②

NOTE:
Install the V-bet with clutch assembly to the primary sheave side.

CAUTION:
Never smear grease to the V-belt, secondary sheave and clutch.

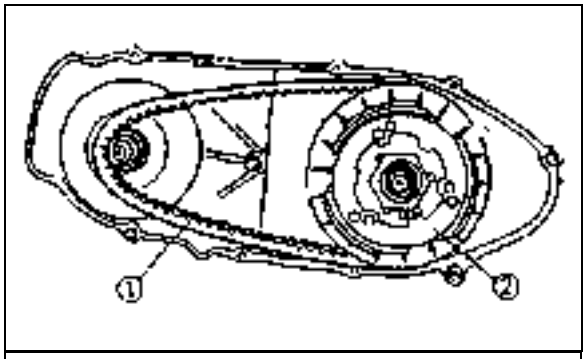

7. Install:
●Nut ① (clutch carrier)

NOTE:
Tighten the nut (clutch carrier), using the locknut wrench ③ while holding the clutch carrier with the rotor holder ②

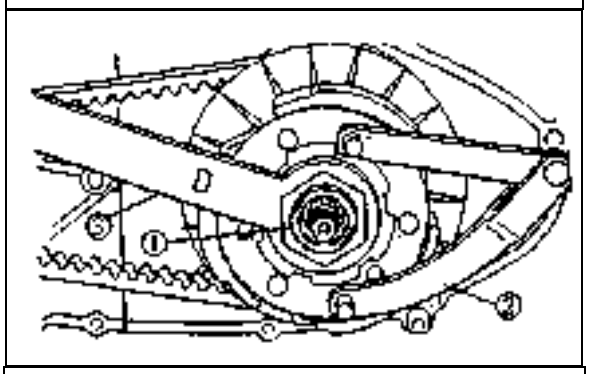

8. Install:
●Clutch housing ①
●Nut (clutch housing) ②

NOTE:
Tighten the nut (clutch housing),using the sheave holder ③).

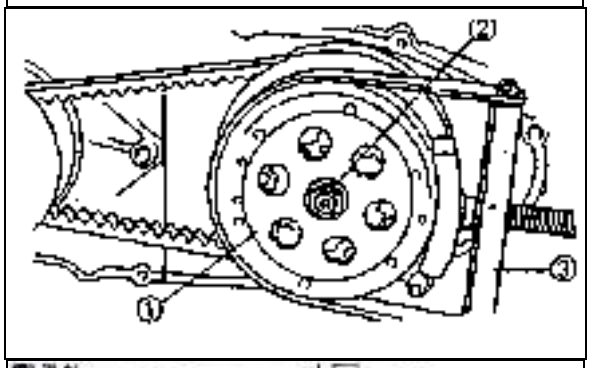

9. Set:
●V- belt

NOTE:
Move the V-belt to minimum diameter of the primary sheave ①, maximum diameter of the secondary sheave ② and make the V-belt tense.

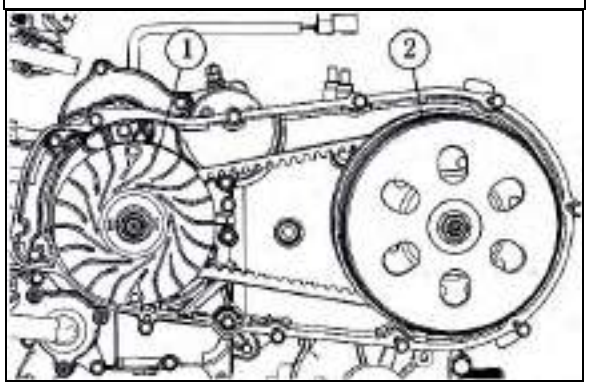

3.8 A.C. MAGNETO AND STARTER CLUTCH

MAGNETO COVER AND STATOR COIL

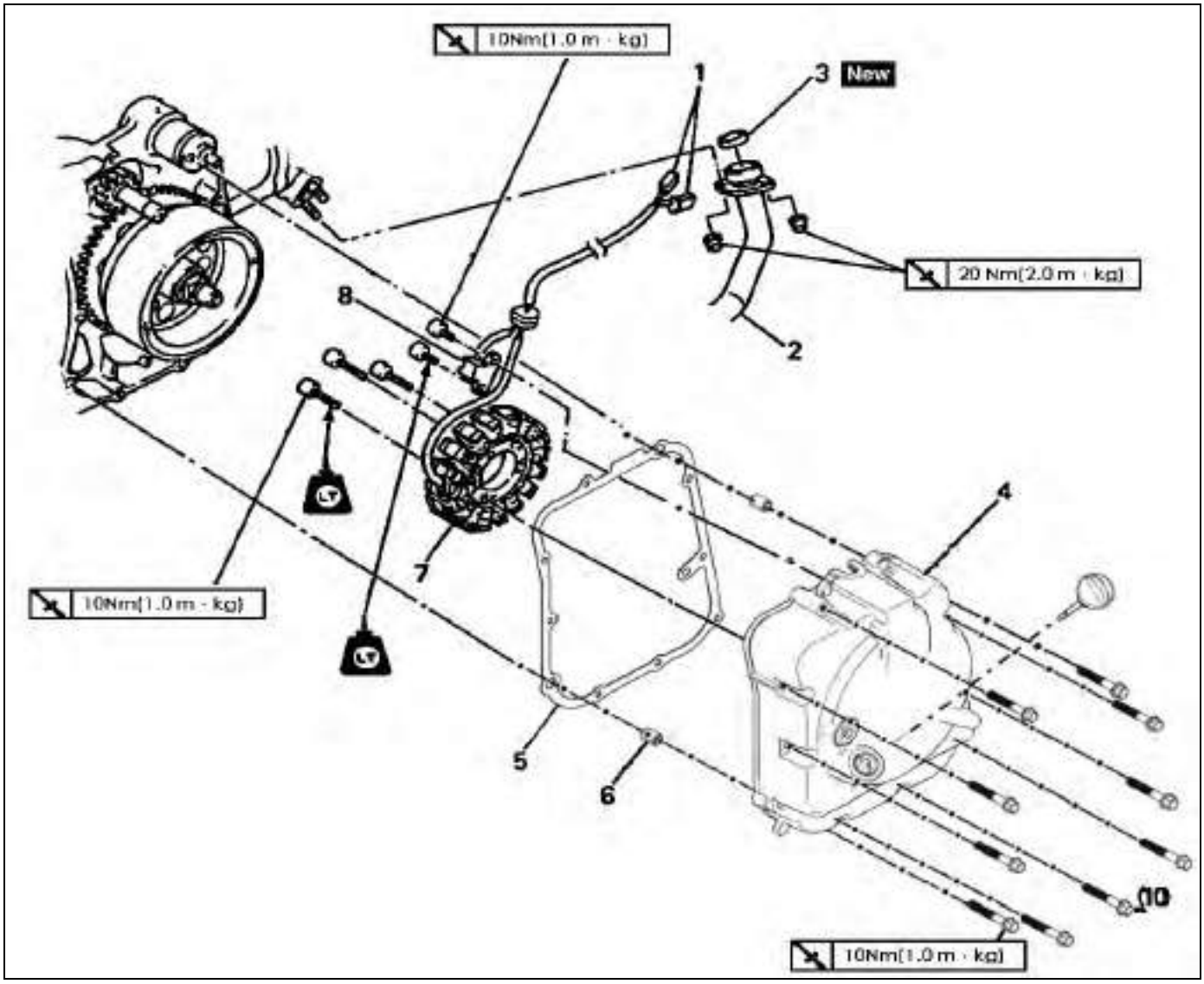

Order	Job name/ Part name	Q'ty	Remarks
	Magneto cover and stator coil removal		Remove the parts in order.
	Drain the engine oil.		Refer to "ENGINE OIL REPLACEMENT" section.
1	Couplers (A.C. magneto lead)	2	**NOTE:**
2	Exhaust pipe	1	Disconnect the couplers.
3	Exhaust pipe gasket	1	
4	Magneto cover	1	
5	Gasket (magneto cover)	1	
6	Dowel pins	2	
7	Stator coil	1	
8	Pick up coil	1	
			Reverse the removal procedure for installation.

A. C. MAGNETO AND STARTER CLUTCH

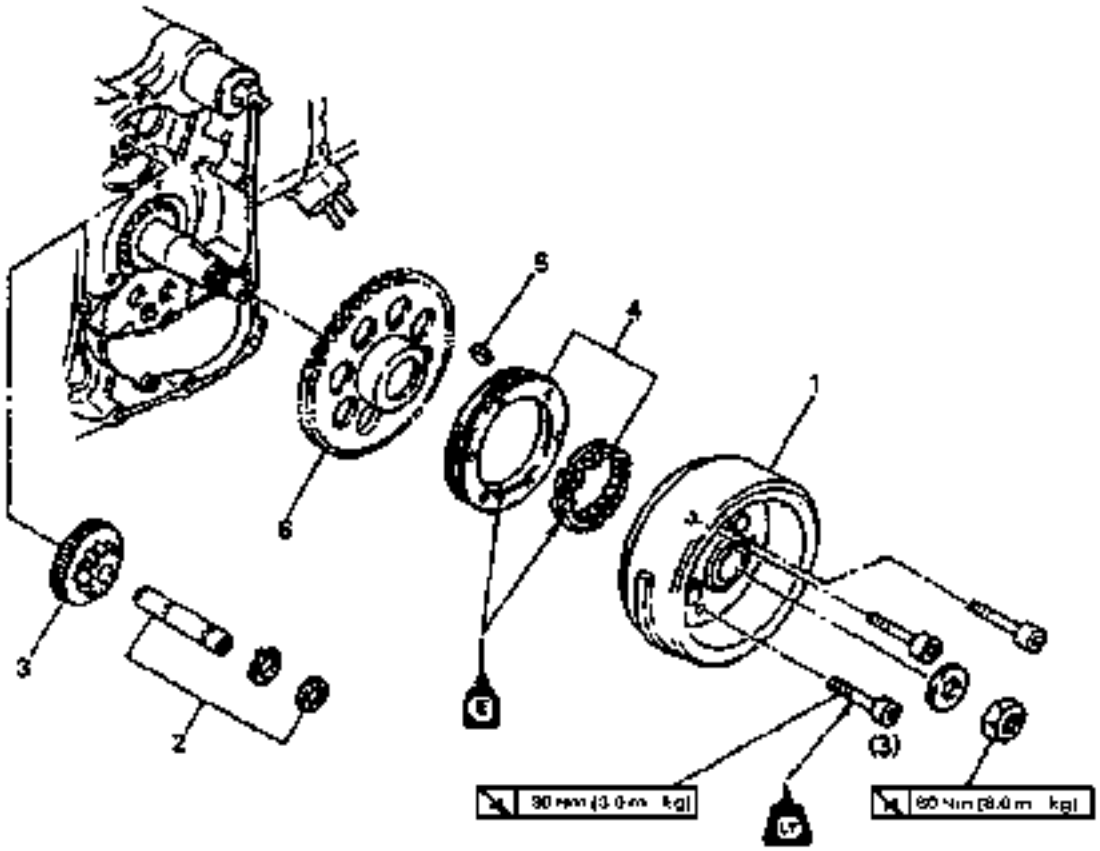

Order	Job name/ Part name	Q'ty	Remarks
	A.C. magneto and starter clutch removal		Remove the parts in order.
1	Rotor	1	Refer to "A.C. MAGNETO ROTOR REMOVAL /INSTALLATION" section.
2	Shaft (idle gear)	1	
3	Idler gear	1	
4	Starter one way clutch assembly	1	
5	Woodruff key	1	Refer to "ROTOR INSTALLATION" section.
6	Starter wheel gear	1	
			Reverse the removal procedure for installation.

A.C. MAGNETO ROTOR REMOVAL

1. Remove:
●Nut ① (rotor)
●Plain washer②

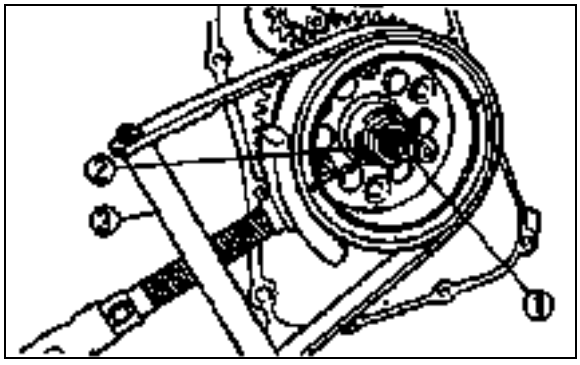

NOTE:
●Loosen the nut (rotor) ①while holding the rotor with a sheave holder③ .
●Do not allow sheave the holder touch to the projection on the rotor.

2. Remove:
●Rotor ①
●Woodruff key

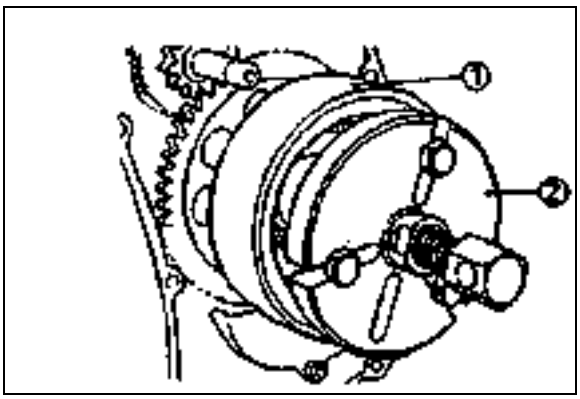

NOTE:
●Remove the rotor ②using the flywheel puller.
●Center the flywheel puller over the rotor.
Make sure after installing the holding bolts that the clearance between the flywheel puller and the rotor is the same everywhere. If necessary, one holding bolt may be turned out slightly to adjust the flywheel puller's position.

CAUTION:
Cover the crankshaft end with the box wrench for protection.

STARTER DRIVE GEAR INSPECTION

1. Inspect:
●Starter idle gear teeth
●Starter drive gear teeth
●Starter wheel gear teeth
Burrs /chips /roughness /wear → Replace.

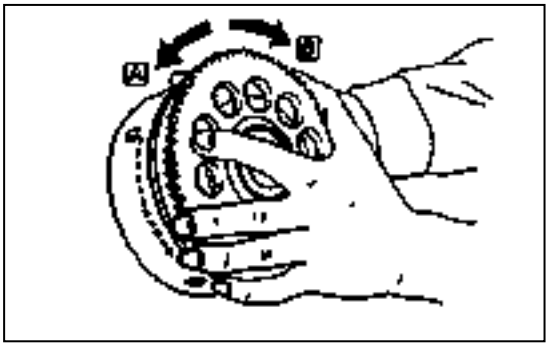

2. Check:
●Starter clutch operation
Push the dowel pins to the arrow direction.
Unsmooth operation → Replace.

Checking steps:
●Hold the starter clutch.
●When turning the starter wheel gear clockwise, the starter clutch and the starter wheel gear should be engaged.
●If not, the starter clutch is faulty. Replace it.
●When turning the starter wheel gear counter clockwise, it should turn freely.
●If not, the starter clutch is faulty. Replace it.

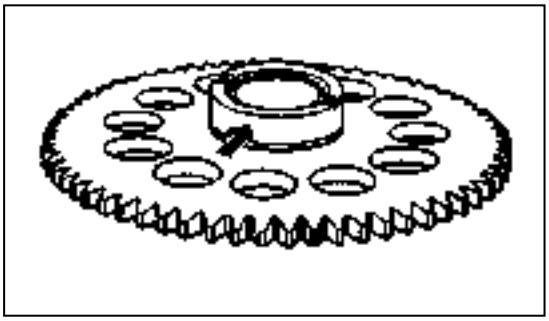

A.C. MAGNETO ROTOR INSTALLATION

1. Install:
- Starter wheel gear ①.
- Woodruff key ②

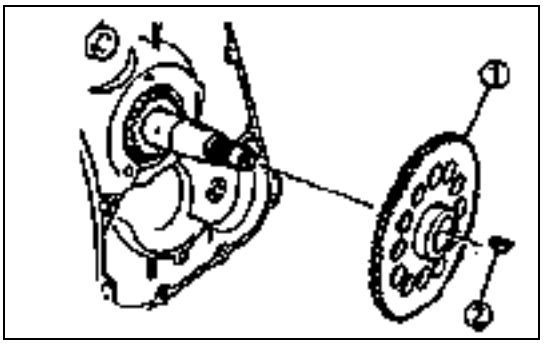

NOTE:
Install the starter wheel gear①, then install the woodruff key②.

2. Install:
- Plain washer
- Rotor ①

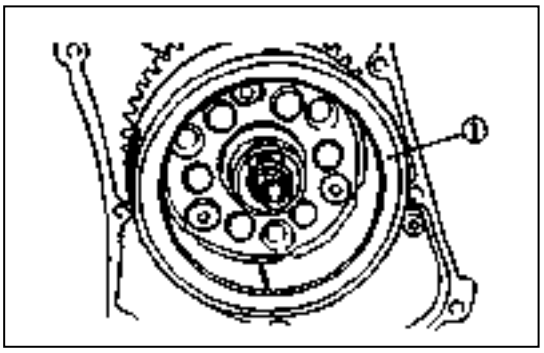

NOTE:
- Clean the tapered portion of the crankshaft and the rotor hub.
- When installing the magneto rotor, make sure the woodruff key is properly seated in the key way of the crankshaft.

3.Tighten:
- Nut(rotor)① 80Nm(8.0m·kg)

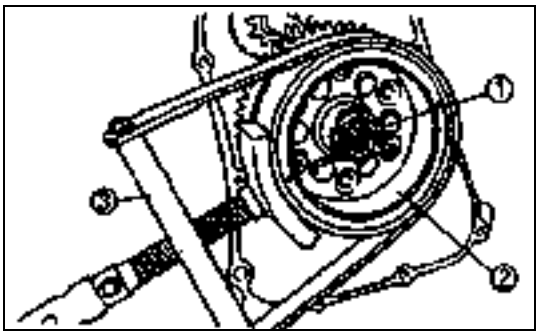

NOTE:
Tighten the nut (rotor)① while holding the magneto rotor② with a sheave holder③.

3.9 OIL PUMP

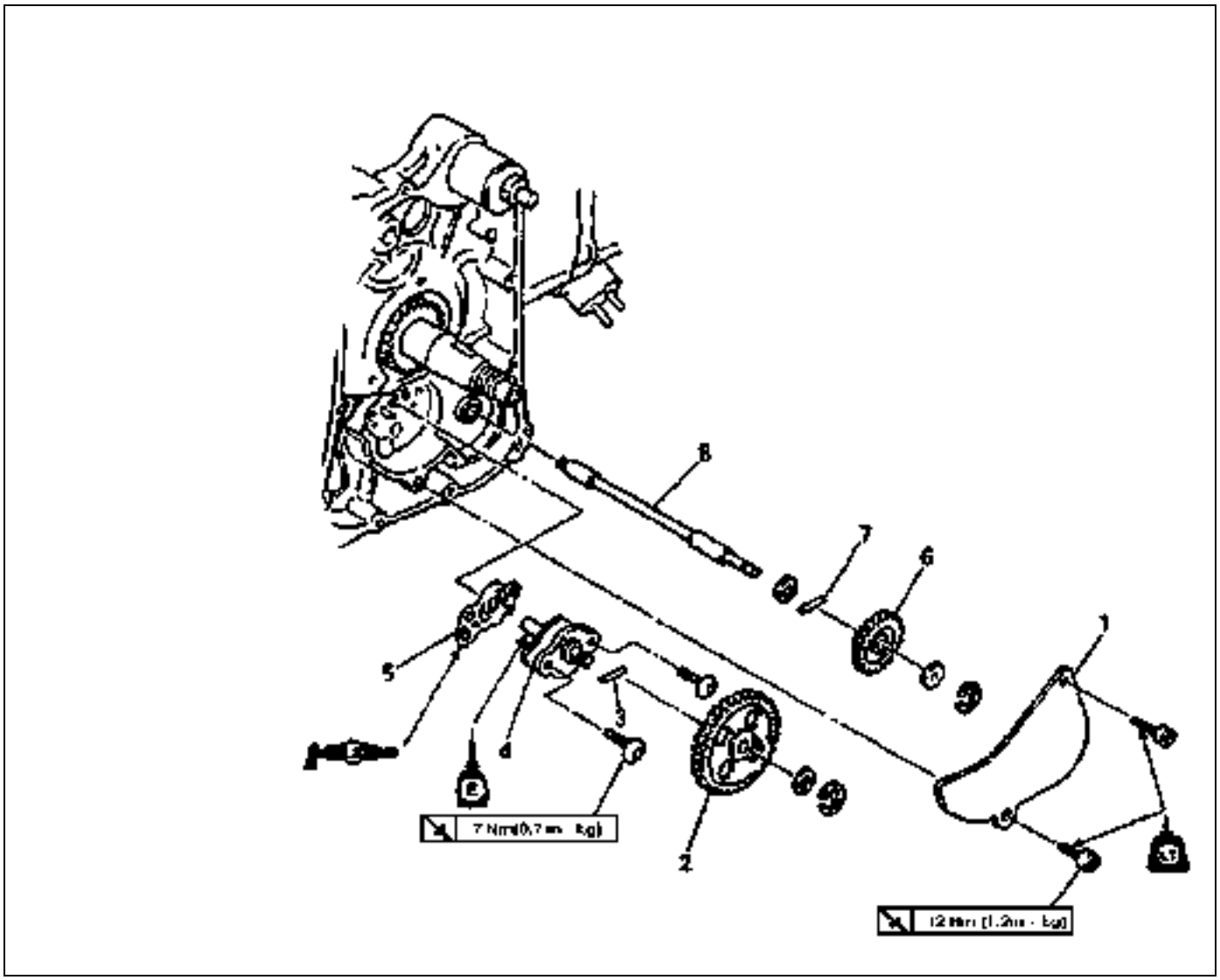

Order	Job name/ Part name	Q'ty	Remarks
	Oil pump removal		Remove the parts in order.
	A.C. magneto		Refer to "A.C. MAGNETO AND STARTER CLUTCH" section.
1	Cover	1	
2	Pump driven gear	1	
3	Dowel pin	1	
4	Oil pump assembly	1	
5	Gasket	1	
6	Impeller shaft gear	1	
7	Dowel Pin	1	
8	Shaft	1	
			Reverse the removal procedure for installation.

OIL PUMP INSPECTION

1. Inspect:
- Drive gear (oil pump) ①
- Pump housing
- Pump housing cover

Wear /cracks/ damage → Replace.

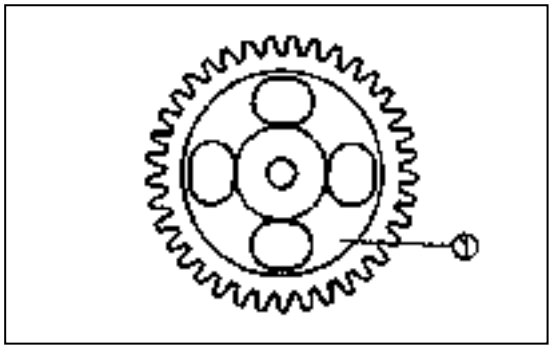

2. Measure:
- Tip clearance

(between the inner rotor ① and the outer rotor②)
- Side clearance

(between the outer rotor ② and the pump housing ③)
- Housing and rotor clearance

(between the pump housing ③ and the rotors ① ②)

Out of specification → Replace the oil pump assembly.

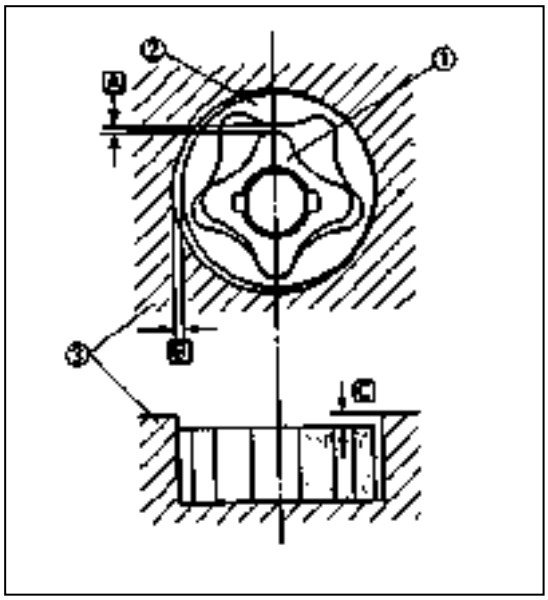

Tip clearance A :
0.10-0.34 mm <Limit: 0.40mm>
Side clearance B :
0.013-0.036mm <Limit:0.15mm>
Housing and rotor clearance C :
0.04-0.09 mm <Limit: 0.15mm>

3.10 CRANKCASE AND CRANKSHAFT

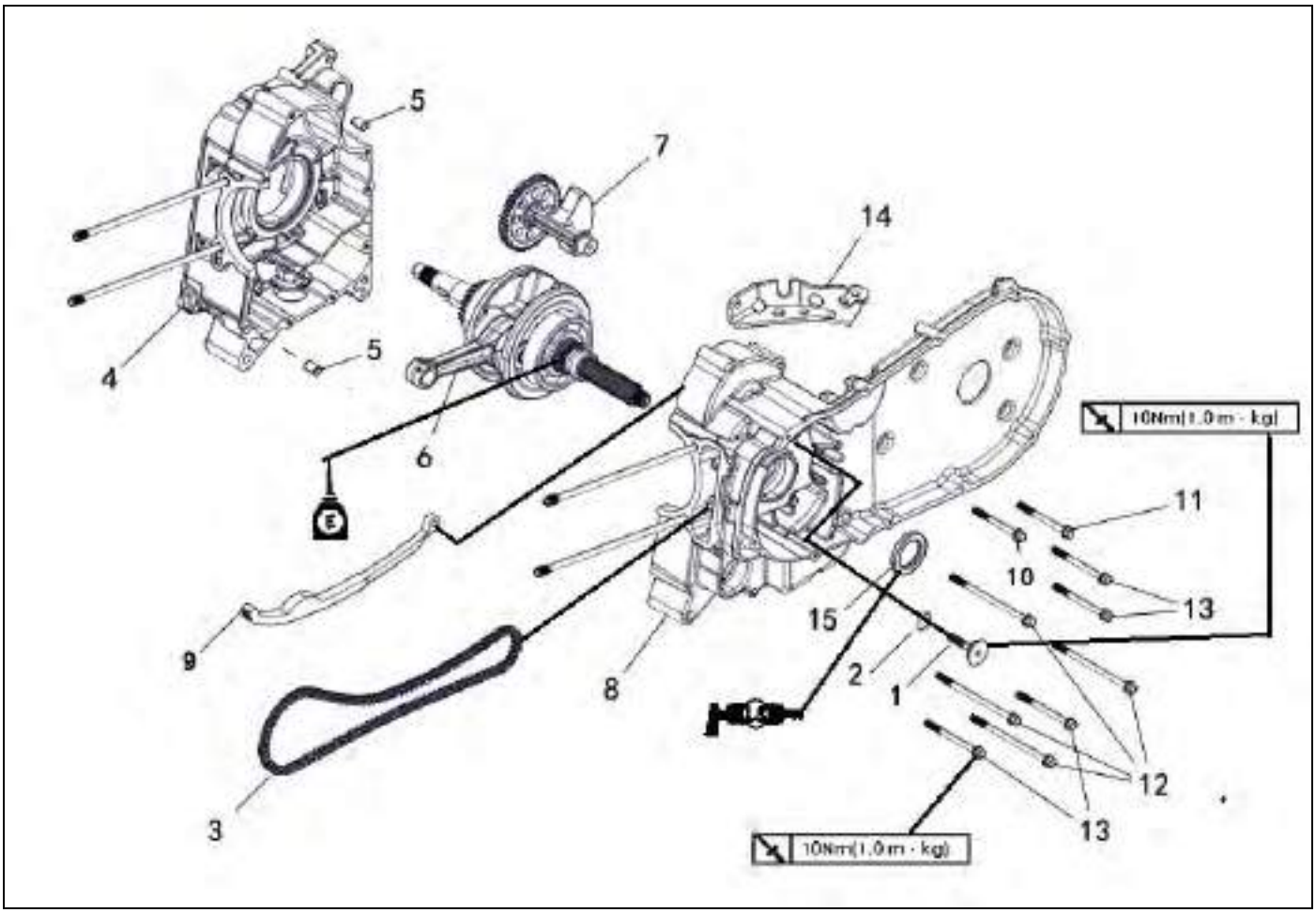

Order	Job name/ Part name	Q'ty	Remarks
	Crankcase and crankshaft removal		Remove the parts in the order.
	Engine removal		Refer to "ENGINE REMOVAL" section.
	Cylinder head		Refer to "CYLINDER HEAD" section.
	Cylinder, and piston		Refer to "CYLINDER AND PISTION" section.
	V-belt, clutch, secondary/ primary sheave		Refer to "V BELT, CLUTCH AND SECONDARY/ PRIMARY SHEAVE"section.
	A.C. magneto and starter clutch		Refer to "A.C. MAGNETO AND STARTER CLUTCH" section.
	Oil pump		Refer to "OIL PUMP" section.
	Water pump		Refer to "WATER PUMP" section.
	Rear wheel		
1	Bolt	1	
2	O- ring	1	

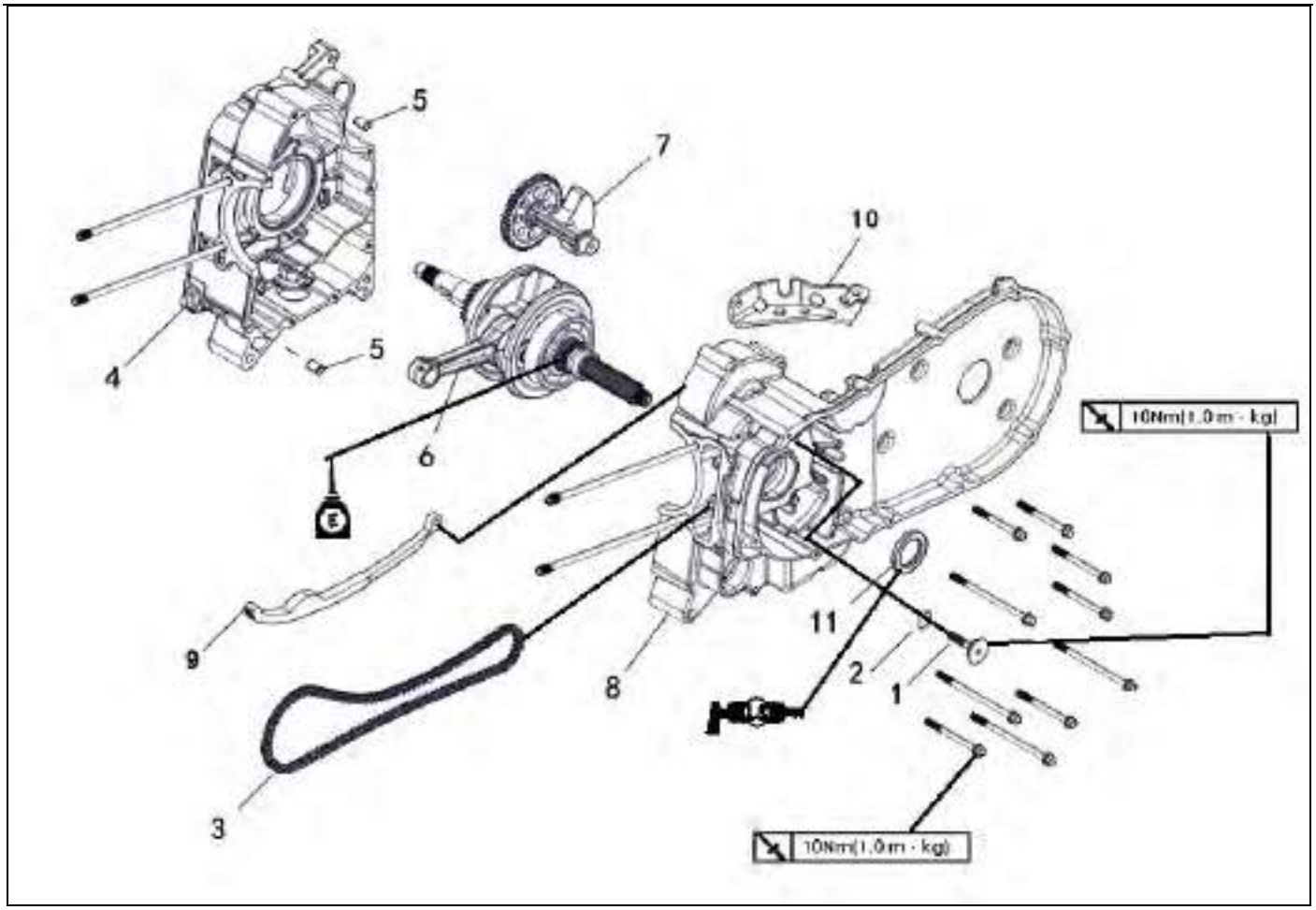

Order	Job name/ Part name	Q'ty	Remarks
3	Timing chain	1	
4	Crankcase (right)	1	
5	Dowel pin	2	
6	Crankshaft assembly	1	
7	Balancer assembly	1	
8	Crankcase (left)	1	
9	Timing chain guide (intake)	1	
10	Bracket shift	1	
11	Oil seal	1	
			Reverse the removal procedure for installation.

CRANKSHAFT&BALANCER REMOVAL

1. Remove:
- Crankshaft assembly
- Balancer assembly
- Timing chain

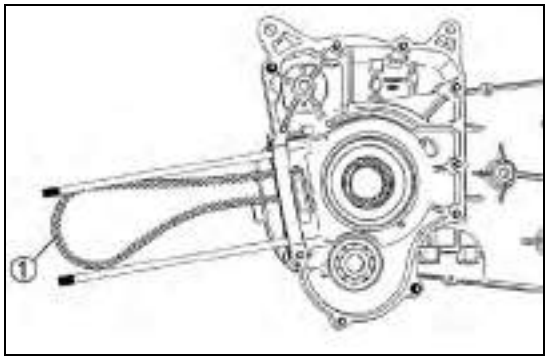

NOTE:
- Before removing the crankshaft assembly, remove the timing chain from the crankshaft sprocket.
- If the timing chain hooks to the crankshaft sprocket, the crankshaft cannot be removed.

CRANKSHAFT INSPECTION

1. Measure:
- Crankshaft runout

Out of specification → Replace crankshaft and/or bearing.

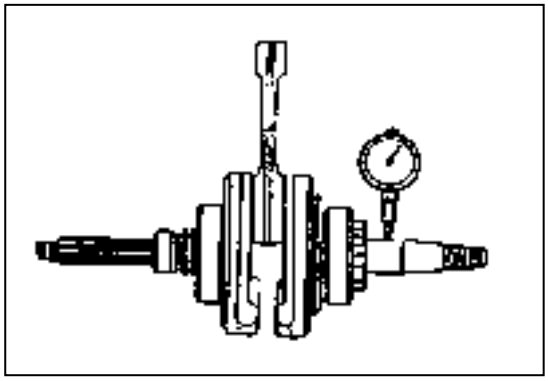

NOTE:
Measure the crankshaft runout with the crankshaft assembly running slowly.

	Runout limit: **0.03 mm**

2. Measure:
- Big end side clearance

Out of specification → Replace big end bearing, crank pin and/or connecting rod.

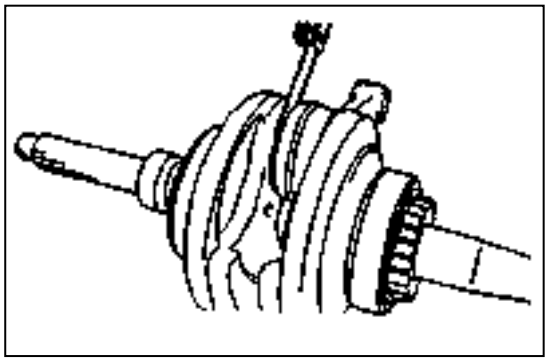

	Big end side clearance: **0.35-0.85 mm**

3. Measure:
- Crank width

Out of specification → Replace crankshaft.

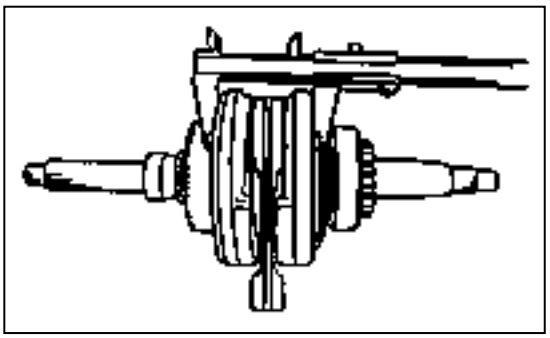

	Crank width: **59.95-60.00 mm**

4. Inspect:
●Crankshaft sprocket ①
Wear/ Damage → Replace crankshaft.
●Bearing ②
Wear/ Crack /Damage → Replace crankshaft.
●Pump drive gear ③
Wear/ Damage → Replace crankshaft.
● Balancer drive gear ④
Wear/ Damage → Replace crankshaft.

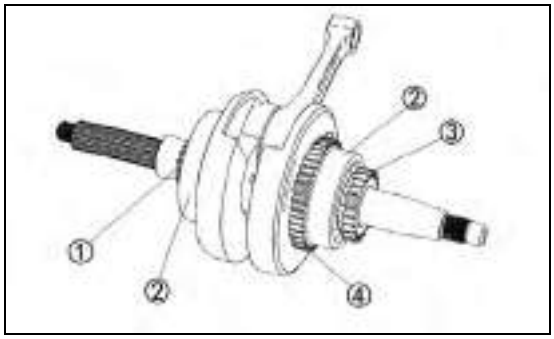

5. Inspect:
●Crankshaft journal
Clogged → Blow out the journal with compressed air.

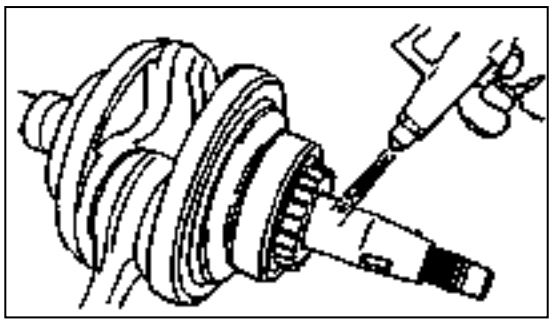

BALANCER INSPECTION
Inspect:
● Balancer driven gear ①
Wear/ Damage → Replace balancer.

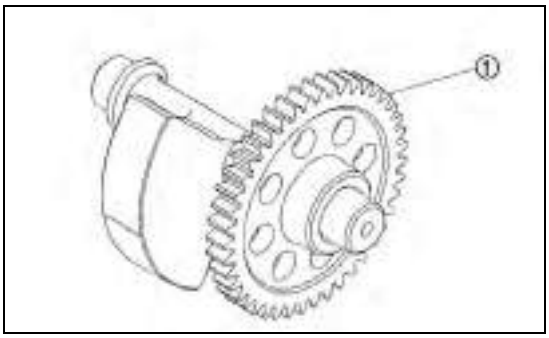

CRANKCASE INSTALLATION
1. Clean all the gasket mating surface and crankcase mating surface thoroughly.
2. Apply:
●Sealant
(onto the crankcase mating surfaces)

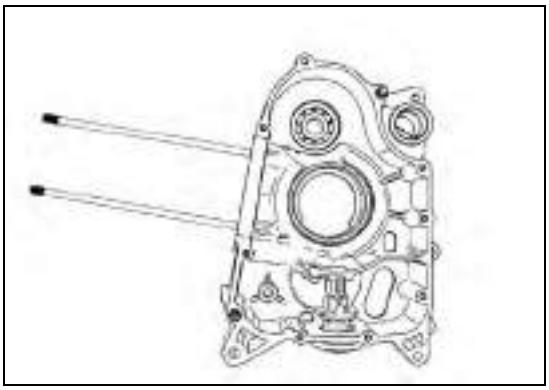

NOTE:
DO NOT ALLOW any sealant to come into contact with the oil gallery.

3. Install:
●Dowel pins
●Timing chain ①

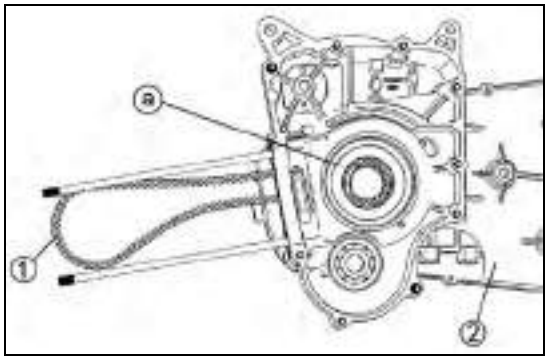

NOTE:
Install the timing chain not to be seen through the crankshaft hole ⓐ on the crankcase (left)②.

3.11 COOLING SYSTEM

3.11.1RADIATOR

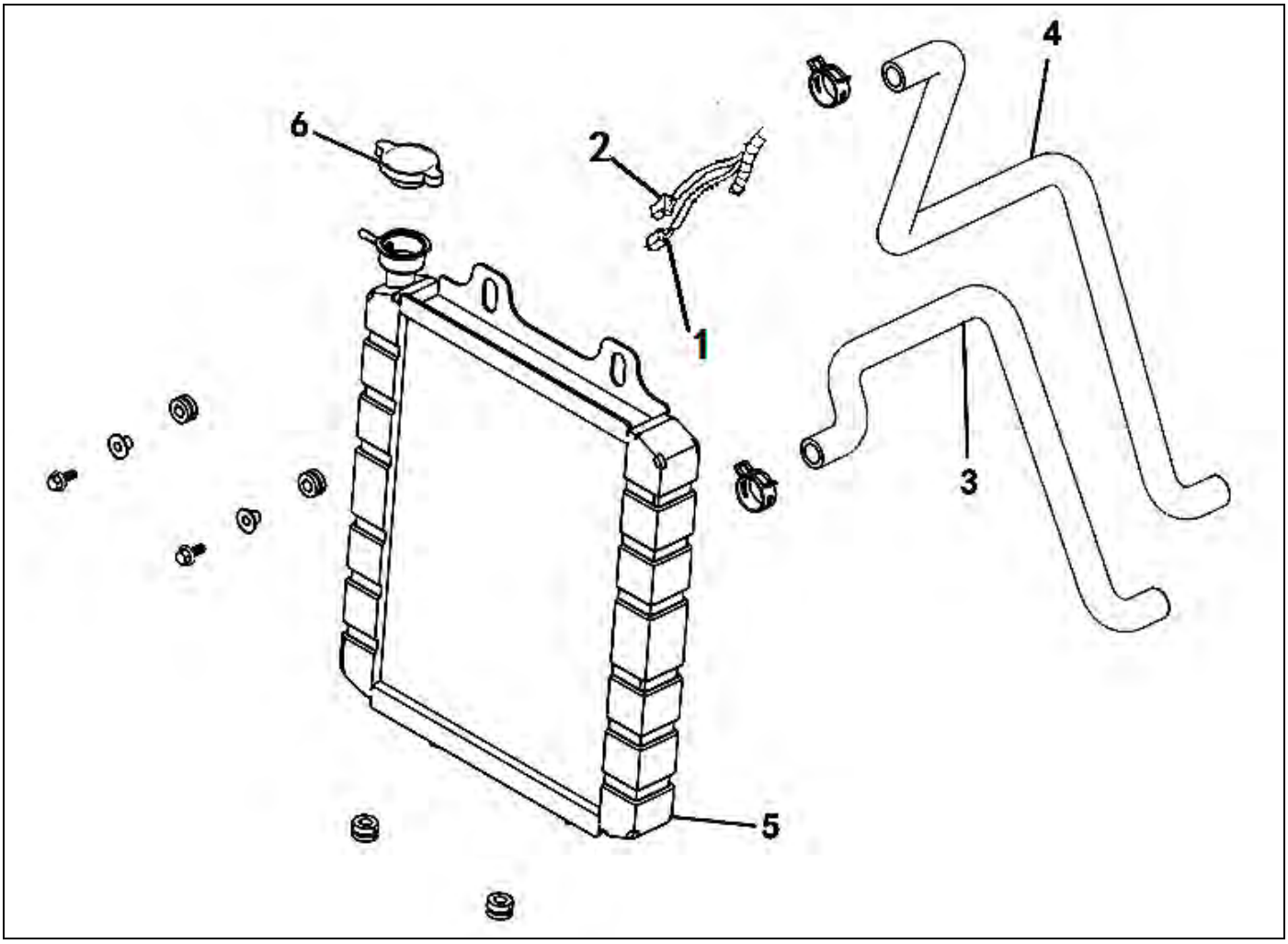

Order	Job name/ Part name	Q'ty	Remarks
	Radiator removal		Remove the parts in order.
	Drain the coolant.		Refer to "COOLANT REPLACEMENT" section.
1	Fan motor leads	1	
2	Thermo switch leads	1	
3	Outlet hose (radiator)	1	
4	Inlet hose (radiator)	1	
5	Radiator	1	
6	Radiator cap	1	
			Reverse the removal procedure for installation.

INSPECTION

1. Inspect:
●Radiator ①
Obstruction → Blow out with compressed air through the rear of the radiator.
Flattened fins → Repair or replace.
If flattened over the 20% of radiator fin, repair or replace the radiator.

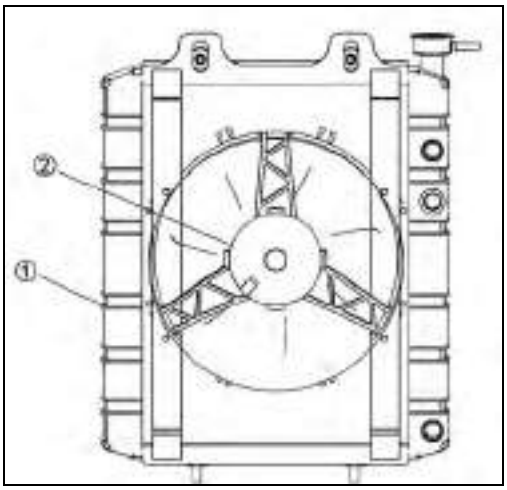

CAUTION:
Use only specified adhesive to repair the radiator.

2. Inspect:
●Radiator hoses
●Radiator pipes
Cracks/damage → Replace.

3. Measure:
●Radiator cap opening pressure
●Radiator cap opens at a pressure below the specified pressure → Replace.

	Radiator cap opening pressure: 110-140kPa (1.1-1.4kg/cm^2, 1.1-1.4 bar)

Measurement steps:
●Attach the radiator cap tester ①and adapter ② to the radiator cap ③.
●Apply the specified pressure for 10 seconds, and make sure there is no pressure drop.

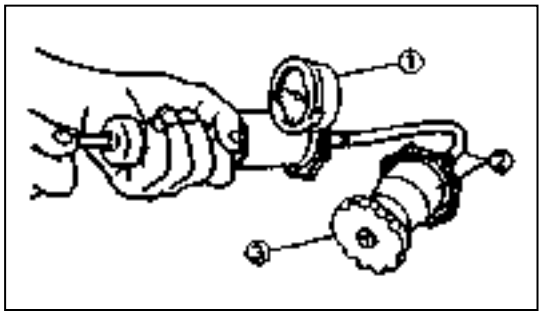

4. Inspect:
●Fan motor assembly
Damage → Replace.
Malfunction → Check and repair.
Refer to "COOLING SYSTEM ".

5. Inspect:
●Pipes
Cracks/damage → Replace.

3.11.2WATER PUMP

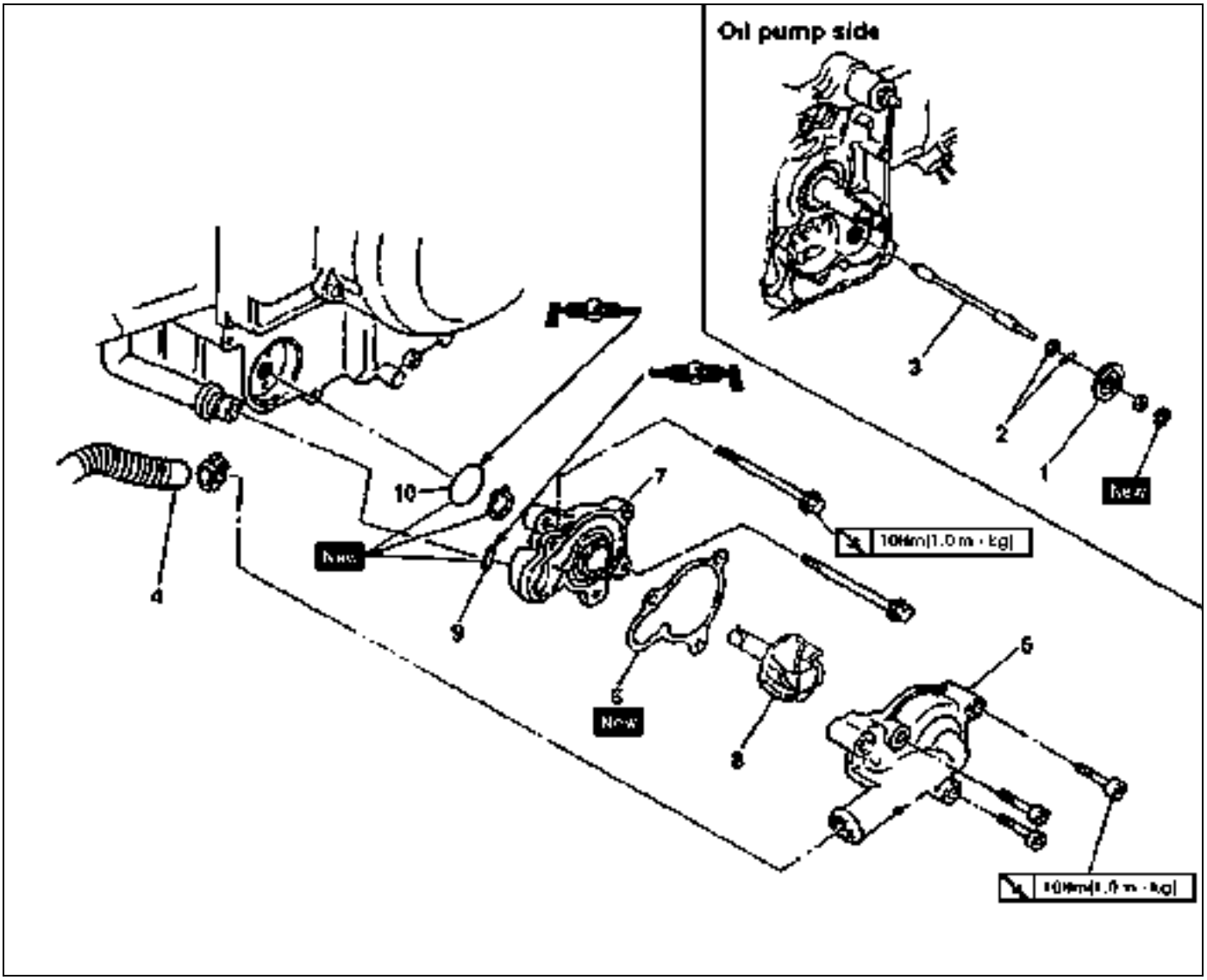

Order	Job name/ Part name	Q'ty	Remarks
	Water pump removal Drain the coolant.		Remove the parts in order. Refer to "COOLANT REPLACEMENT" section.
	A.C. magneto		Refer to "A.C. MAGNETO AND STARTER CLUTCH" section.
1	Impeller shaft gear	1	
2	Dowel pin/plain washer	1/1	
3	Shaft	1	Refer to "WATER PUMP INSTALLATION" section.
4	Outlet hose (radiator)	1	
5	Housing cover	1	
6	Housing cover gasket	1	
7	Water pump housing	1	
		1	

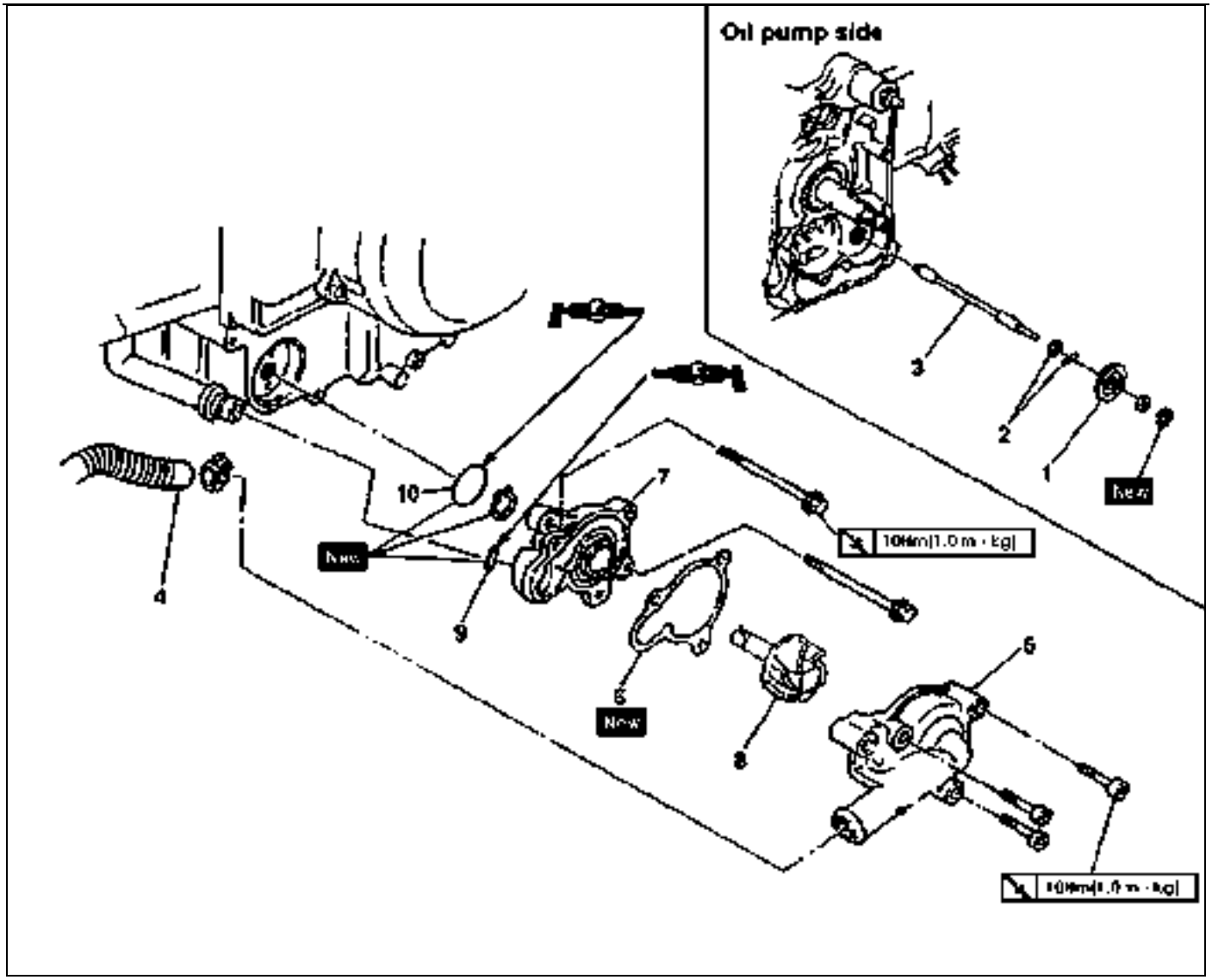

Order	Job name/Part name	Q'ty	Remarks
8	Impeller shaft	1	Refer to "WATER PUMPINSTALLATION" section.
9	O-ring	1	
10	O-ring	1	
			Reverse the removal procedure for installation.

NOTE:
●It is not necessary to disassemble the water pump, unless there is an abnormality such as excessive change in coolant temperature and/ or level, discoloration of coolant, or milky transmission oil.
●If necessary, replace water pump as an assembly.

INSPECTION
1. Inspect:
●Impeller shaft
Wear/damage → Replace.
Fur deposits → Clean.

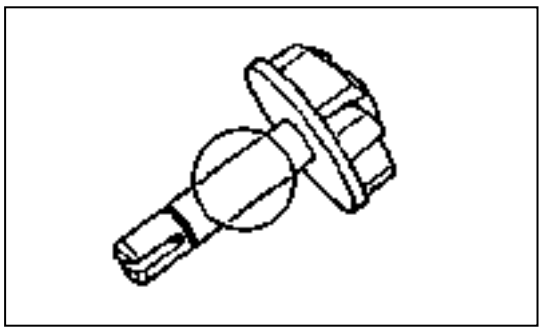

2. Inspect:
●Impeller shaft gear
Wear/damage → Replace.

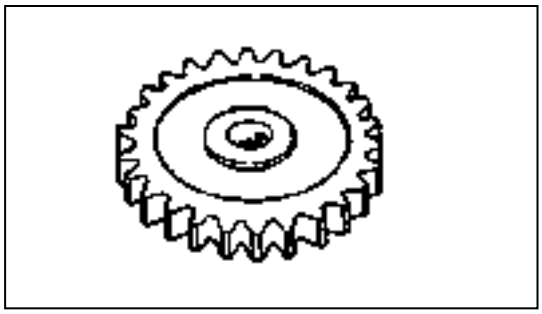

3. Inspect:
●Mechanical seal ①
Damage/worn/wear → Replace.

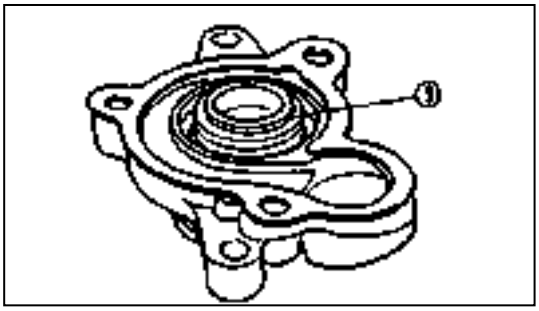

WATER PUMP INSTALLATION
1. Install:
●Mechanical seal ① NEW

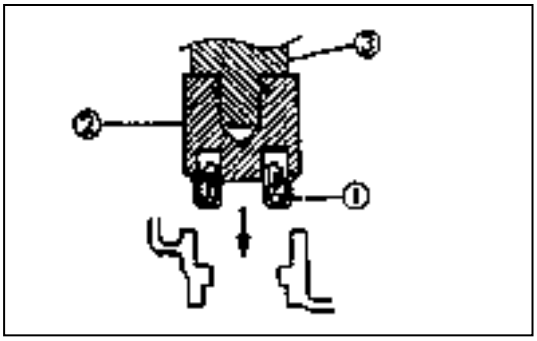

Installation steps:
●Apply the bond to the outside of the mechanical seal.
●Install the mechanical seal by using the mechanical seal installer ② and middle shaft bearing driver ③

2. Install:
●Mechanical seal ① NEW
Apply coolant to the outside of the mechanical seal before installing.

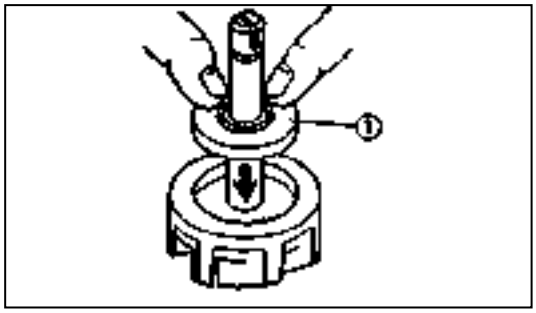

NOTE:
Do not smear any oils or grease on the ring side of the mechanical seal.

3. Inspect:
●Mechanical sea , slip ring side ①
Inspect the slip ring side of the mechanical seal and the impeller ② for level installation.
Incorrect level → Reinstall.

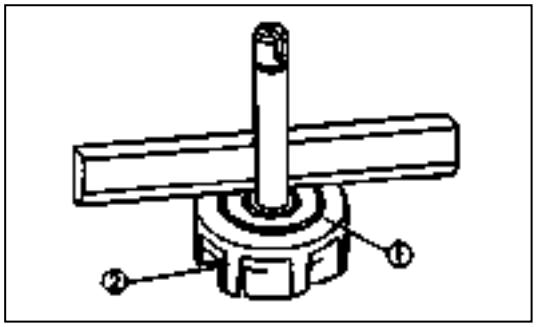

4. Install:
●Impeller shaft①
●Circ lip ② NEW

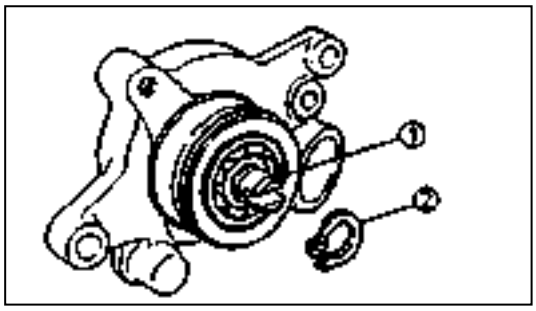

Installation steps:
●Apply a small amount of grease to the impeller shaft tip.
●Install the impeller shaft while turning it. Use care so that the oil seal is not damaged or the spring does not slip off its position.
NOTE:
After installing the impeller shaft, check it for smooth rotation.

5.Install:
●O-ring① NEW

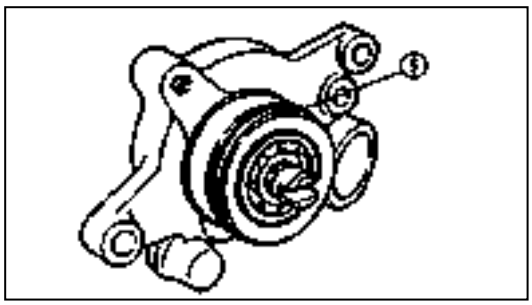

6. Install:
●Water pump housing
●Housing cover 10Nm(1.0m·kg)

7. Install:
●Shaft①
Align the slot on the impeller shaft with the projection on the shaft when installing.

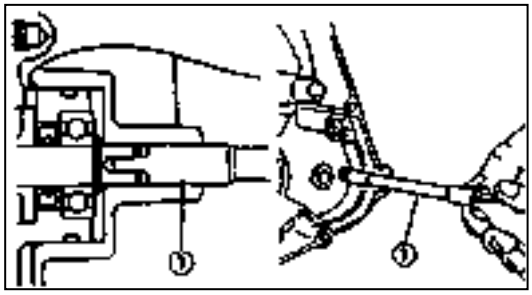

3.11.3THERMOSTAT

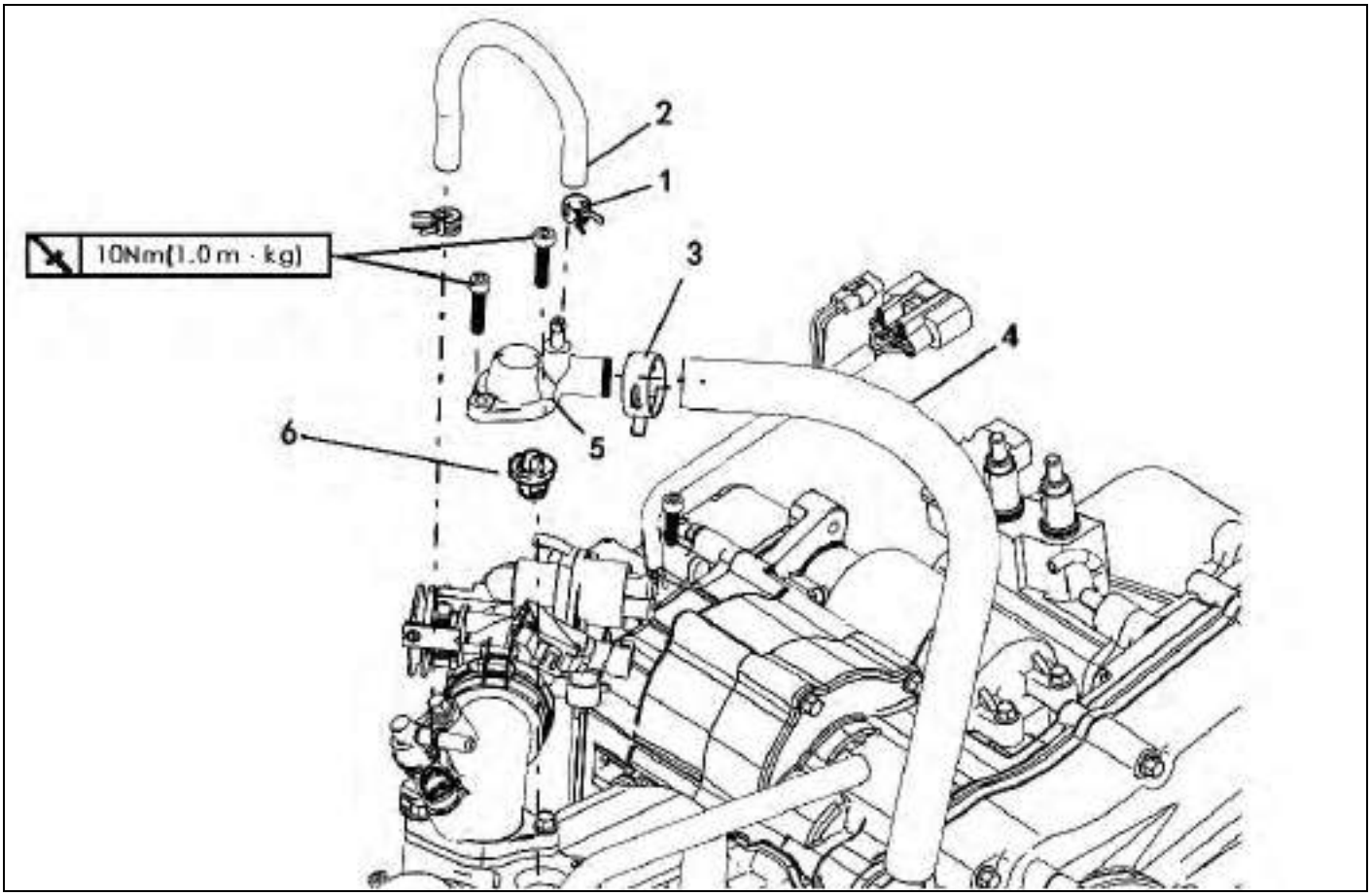

Order	Job name/ Part name	Q'ty	Remarks
	Thermostat removal Drain the coolant		Remove the parts in order. Refer to "COOLANT REPLACEMENT" section.
1	Clip	1	
2	Hose	1	
3	Hose clamp	1	
4	Inlet hose (radiator)	1	
5	Thermostatic cover	1	Refer to "THERMOSTAT INSTALLATION" section.
6	Thermostatic valve	1	Reverse the removal procedure for installation.

INSTALLATION

1. Inspect:

●Thermostatic valve

Valve does not open at 70-74˚C➞Replace.

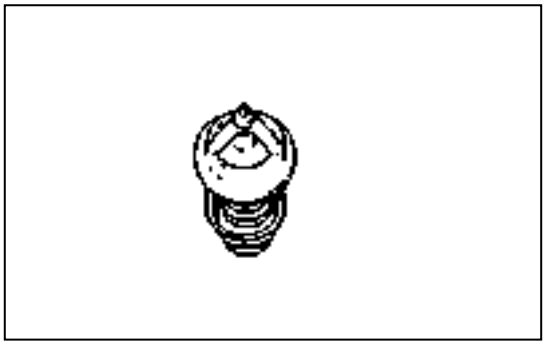

Inspection steps:

●Suspend the thermostatic valve in a vessel.

●Place a reliable thermometer in water.

● Observe the thermometer, while continually stirring the water.

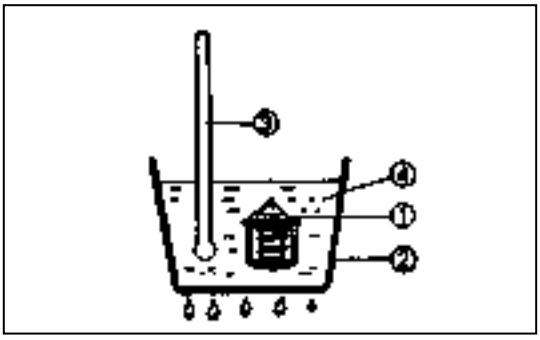

①Thermostatic valve
②Vessel
③Thermometer
④Water
A CLOSE
B OPEN

NOTE:

The thermostatic valve is sealed and its setting requires specialized work. If its accuracy is in doubt, replace. A faulty unit could cause serious over-heating or over cooling.

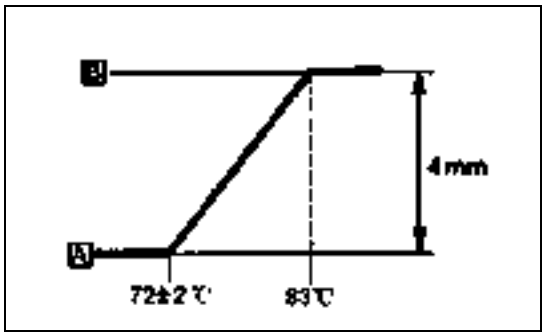

2.Inspect:

●Thermostatic cover

Cracks /damage ➞ Replace.

INSTALLATION

1. Install:

●Thermostatic valve

●Thermostatic cover

3.12 Fuel Injection System

3.12.7.7 Fuel Leakage Check Procedure

3.12.8 Motor Scanner (for MT05 EMS)
3.12.8.1 Precautions
3.12.8.2 Configurations
3.12.8.3 Preparations Connection
3.12.8.4 Functions
3.12.8.5 MT05 ECU Malf Code

3.12.1 ECU

3.12.1.1 Description & Working Principle

The ECU continuously monitors the operating conditions of the engine through the system sensors. It also provides the necessary computation, adaptability, and output control in order to minimize the tailpipe emissions and fuel consumption, while optimizing vehicle drivability for all operating conditions. The ECU also provides diagnosis when system malfunctions occur.

3.12.1.2 Appearance

The MT05 ECU has a polyester header, with an aluminum base plate. The ECU is shown below.

3.12.1.3 Handling –Don’ts & Do’s

ACTION	REASON
DO NOT: Place the ECU close to the exhaust pipe or Engine when removed.	High temperature might reduce the life of the ECU and also can damage the ECU.
DO NOT: Place the ECU close to or pour water, oil or any other liquids.	ECU is susceptible to water and liquids
DO NOT: Allow mud or other debris to accumulate on the surface of the ECU.	Having mud or debris accumulated on the ECU casing reduces its heat dissipation efficiency.
DO NOT: Apply any voltage relative to any point to the ECU.	Drastically affects the performance of the ECU and may lead to ECU damage.
DO NOT: Clean ECU with any solvent or any corrosive liquid.	Can damage the housing of the ECU.
DO: Take extreme care that water droplets or excess moisture should not fall on ECU connectors.	ECU connectors can get short and may lead to ECU damage.
DO: Clean the ECU with a moist cloth and keep it dry.	Prevents ECU damage.

3.12.1.4 Installation requirements

The ECU shall be mounted using M6 machined screws with a torque of 8 Nm ±10%. The mounting surface should also be flat to avoid subjecting the base plate to unnecessary force and warping the PCB.

3.12.1.5 Power Requirements

● **Operating Range:** All planned functions are executed in this range. Battery and/or Ignition voltage: 9.0 to 16V DC. However, when the battery voltage is lower than 12.6 volts, the engine's start speed may be low. Then, you should charger the battery with the charge.

● **Reverse Voltage:** The controller will survive with no permanent damage: Battery and/or Ignition voltage < -13V DC for 1 minute. But the fuse will fuse.

3.12.1.6 Operating Temperature

The controller shall operate in the ambient temperature from -20 ℃ to +85 ℃.

3.12.1.7 Maintenance service and Repair

ECU is a non-serviceable part. Once there are problems, it's important to first determine if the problem is caused by software/calibration. If it is caused by software/calibration, please reflash the ECU by professional tools. In the event of ECU hardware failure or malfunction (during warranty period only) the ECU should be sent back to the vehicle manufacturer giving complete details of the ECU Part No, Serial number, Vehicle Model & Make, manufacturing Date, Total kms run on the vehicle, Location of use, Vehicle No, Date of return.

3.12.2 Injector

3.12.2.1 Appearance

The figure below shows the standard M3.5 Fuel Injector appearance.

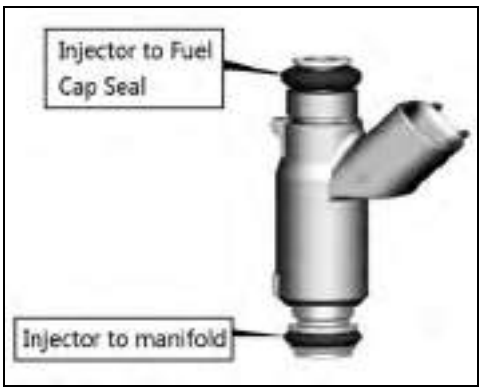

3.12.2.2 Temperature Requirements :

Typical injector temperature environments are defined below. The injector will not experience any loss of the ability to comply with the flow tolerance requirements after exposure to the following temperature environments. Also, they will not experience unacceptable external leakage, any type of physical degradation, or loss of service life during or after being exposed to these ambient conditions.

● Normal Operating Temperature Range: - 30℃ to 125℃

● Extreme Operating Temperature Range (some performance degradation): - 40℃ to 150℃

3.12.2.3 Fuel Contamination

The injector fuel inlet filter protects the fuel injector from initial build fuel contamination as well as from fuel system assembly contamination. Filtration is extremely important because particle contaminants can cause an injector to stick open, flow shift or tip leak.

The injector inlet filter is not a serviceable component and is designed only to trap potential built-in contamination between the chassis fuel filter and injector.

Please replace the fuel filter regularly according to the usage. The filter is located above the tank.

3.12.2.4 Injector Installation

Follow these guidelines to prevent damage to the injector and its electrical interface during the replacement or re-installation process.

- Lubrication: Apply a light coating of lubricant to the lower injector seal ring. ISO 10 light mineral oil or equivalent is recommended.
- The preferred technique is to apply the lubricant to the sockets the injectors are being installed into, rather than directly to the seal ring itself. This will help minimize the possibility of injector contamination.
- Avoid applying lubricant over the director plate holes – this may restrict injector flow. Do not dip the injector tip in lubricant.
- The injectors come from the factory with the seal rings attached. The re-use of seal rings is not preferred when replacing an injector. If an injector is to be re-used, and no new seal rings are available, take care to inspect each seal ring for signs of damage. Even minor defects in the seal ring can lead to leakage. Take extra care in installing seal ring over flange of injector inlet.
- Carefully installing the harness connector will prevent terminal damage. Listen for a positive audible click from the connector retention device — this ensures that it is fully engaged.
- Avoid unnecessarily disconnecting / reconnect--ing the harness connector.
- Wires routed in a manner that can allow them to become pinched between components can result in a short circuit and a stuck open injector.
- For injectors that require orientation for spray pattern, do not rotate the injector in the fuel rail assembly to install the injector electrical connector. This may dislodge the retaining clip, and result in improper spray orientation.

The table is a list of lubricant oils that were tested and approved for O-ring lubrication. These lubricants have shown to have no effect on injector performance (plugging, sticking).

Lubrication Recommendation		
Lubricant Name	Supplier	Viscosity (cSt) @ 40 °C
Spindura 10	Equilon	10
Spindura 22	Equilon	21
DTE-24	Mobil	32
DTE-25	Mobil	46
DTE-26	Mobil	68
Norpar 15	Exxon / Mobil	<1
Drawsol 60	DA Stewart	1-2
NocoLube AW 46	NOCO Energy	46
NocoLube AW 32	NOCO Energy	32
Advantage Spindle Oil	Advantage Lubrication Specialties	10

3.12.2.5 Replacement Techniques

The following procedure outlines standard the Injector removal and replacement.

Warning: The injector and all associated hardware may be extremely hot.

- Shut off ignition;
- Disconnect negative battery cable to avoid possible fuel discharge if an accidental attempt is made to start the engine;
- Disconnect the electrical connector from the injector wiring harness;
- Relieve fuel pressure;
- Remove the retaining clip from the fuel injector;
- Remove the fuel line connection from the injector;
- Carefully clean debris from the interface surfaces. Do not damage seal mating surfaces;
- Remove the injector from the manifold;
- Apply a light coating of a lubricant to both the upper and lower injector seal ring of the replacement injector;

Check that the injector is installed in the original orientation to maintain proper spray targeting, and that the retaining clip is properly seated on the injector and the fuel line;

- Install the new injector into the manifold.
- Install the retaining clip after connecting the fuel

line;

- Tighten the injector mounting to the desired torque as mentioned in the manufacturer manual;
- Tighten the fuel line;
- Re-install the injector electrical connector;
- Turn the key on and off to check if the fuel is leaking;
- Start engine and verify proper operation.

3.12.2.6 Interchange ability

The injector should be replaced in service only with an equivalent injector of the same part number. On occasion, a new part number may supersede part numbers. Consult the appropriate vehicle service manual and part number guide for the latest replacement injector part number information.

3.12.3 Throttle Body Assembly

3.12.3.1 Description and Working Principle

The Throttle Body Assembly is an interactive system comprised of the following subsystems: the main casting body, bearing system, shaft and valve system, return spring system, cable interface system, throttle position sensing system, and the bypass air control system. The subsystems interact and support each other to provide all the functional requirements, which are mentioned below:

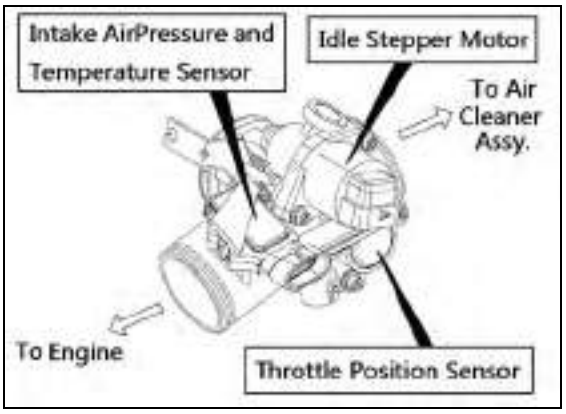

- Control intake air flow;
- Control idle air flow;
- Sense throttle position - Provide position feed--back to Engine Controller;
- Provide reactionary force to the throttle;

3.12.3.2 Throttle Body Removal

- Disconnect negative terminal of the battery;
- Disconnect electric lead wire of throttle position sensor coupler, stepper motor coupler and MAP/MAT sensor coupler (if this sensor is

mounted on the throttle body);

- Disconnect accelerator cable from throttle body;
- Remove air cleaner outlet hose and throttle body outlet hose.

3.12.3.3 Cleaning Procedure

It may be removed and cleaned using carburetor cleaner (3M make recommended). Once the throttle body cover is removed, spray the throttle-body cleaner inside the shipping air passage, and use the brushes to gently dislodge the dirt, gum and varnish that are present. Do not let the bye pass holes be blocked by dirt or foreign particles.

3.12.3.4 Throttle Body Installation

Reverse the procedure for installation noting the following:

- Adjust accelerator cable play.
- Check to ensure that all removed parts are back in place.
- Reinstall any necessary part which have not been reinstalled.

3.12.4 Engine Coolant Temperature Sensor

3.12.4.1 Description and Working Principle

This sensor is used in water cooled engines. It provides a resistance that varies as a function of temperature within prescribed tolerance limits. The sensor has a negative temperature coefficient of resistance.

3.12.4.2 Installation Requirements

Dynamic Torque Requirement: The sensor shall be hand into the application and then driven by a driver with a maximum no load speed of 400 rpm or installed to the desired torque by a hand torque wrench (5/8” hex). The recommended installation torque is:

- Minimum: 20 N·m
- Maximum: 25 N·m
- Static Torque Requirement: The torque require--d to remove the sensor from the mating hole shall be within 200% of the installation torque mentioned above.

3.12.5 Oxygen Sensor

3.12.5.1 Description and Working Principle

This sensor is a device for monitoring the residual oxygen in the exhaust of an internal combustion engine. It is the feedback element for engine closed loop control.

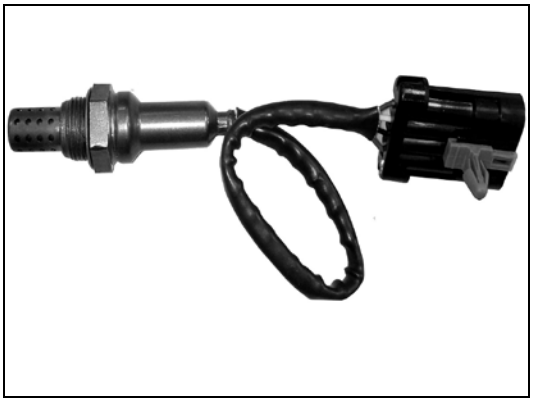

3.12.5.2 Technical Parameters

- A/F ratio rich threshold: ＞750 mVDC
- A/F ratio lean threshold: ＜120 mVDC

(These parameters as above are measured basing on 450°C (engine dyno), typically on 70% duty at 10Hz and under 13.5V);

- Heater part resistance:9.6±1.5Ω (This parameter is measured basing on 21°C);
- Operating temperature range: 260-850 °C.

3.12.5.3 Fuel Quality Requirements

Pb≤0.005g/L

P≤0.0002g/L

S≤0.04% (weight proportion)x

MMT≤0.0085g/L

Si≤4ppm

3.12.6 Ignition Coil

3.12.6.1 Description and Working Principle

This coil provides energy to the spark plug in the combustion chamber. The coil itself doesn't have a driver. The high voltage tower of the coil is connected to the spark plug using a high voltage cable assembly.

3.12.6.2 Installation requirements

● The vehicle frame provides the mounting surface and mounting holes.

● Never route the coil wire with the same bundle as the Crank sensor wires. There is around 200 V peak potential between wire and engine ground. This voltage potential could cause a noise on sensor cables.

3.12.6.3 Do's and Don'ts

ACTION	REASON
DO NOT: Install the low voltage connectors with the power applied.	This might cause an unwanted secondary firing, possibly leading to personal injury.
DO NOT: Use a screw driver to asset in removing secondary boots from the secondary tower. Use tools designed for secondary removal.	It is possible to damage a secondary lead in such a manner that creates an electrical path to outside the system permitting improper system operation misfire, or even possible personal injury if arcing occurs.
DO NOT: Use parts that have been dropped or display physical damage.	Damaged components can lead to premature failure.
DO NOT: Scratch or apply any non approved material to the surface of the high voltage tower which mates with the high voltage secondary leads.	This can jeopardize the seal integrity of the mating surfaces which in turn can create a secondary high voltage leak path.
DO NOT: Strike any part of the ignition system with a tool or other object.	This can lead to physical damage which can cause a system malfunction or failure.
DO NOT: Permit paint or other sprayed materials to be sprayed onto the electrical connectors.	Insulating type sprays can create a high resistance or open connection. And, a conductive type spray can create an electrical short condition.
DO NOT: Support the ignition system by the wiring harness or plug wire.	These leads are not designed to support the weight of the ignition system. It can create a poor electrical connection Or become disconnected allowing the system to fall and be subjected to physical damage

ACTION	REASON
DO NOT: Pierce or probe the secondary leads.	This creates an electrical path to outside the system permitting improper system operation, misfire, or even possible personal injury if arcing occurs.
DO NOT: Operate without the spark plug attached.	If a technician or mechanic comes in contact with the high voltage generated during operation, personal injury may occur. Or, if the engine is operated under this condition, unburned fuel may fill the converter area creating a potential hazard.
DO NOT: Share ignition component wiring with other components, Dedicated wiring is required.	This prevents electrical cross talking between components which can lead to component malfunction.
DO NOT: Apply voltage to the ignition system other than vehicle system voltage for testing purposes.	This can cause reduced performance or an electrical malfunction of the ignition system
DO NOT: Use high impact tools to apply the spark plug boot to the ignition secondary towers. Installation of the high voltage secondary leads by hand is preferred.	Damage to the coil tower, secondary boot, or mating connection surfaces might occur.
DO: Install the secondary leads before connecting the primary leads.	In the event the low voltage connection has been made and the power applied, unwanted secondary output might occur possibly resulting in injury, damage the ignition component, and test equipment.
DO: Take care when working around the ignition system.	The high voltage produced by the coil secondary circuit can cause personal injury and/or damage test equipment.
DO: Proper handling and shipping methods need to be in place to reduce the risk of damage due to impact, moisture, or contamination.	Damaged components can lead to premature failure.
DO: Avoid unnecessary disconnecting and connecting of the electrical components.	The electrical connections are not designed for repeated connection and disconnection.
DO: Insure the low voltage connectors are entirely seated and the locking mechanism is engaged.	This prevents intermittent electrical connections leading to an improper ignition system operation.
DO: Use approved connector breakouts when testing the ignition system.	Connector and/or component damage may occur.
DO: Insure the appropriate seals are included in the connector system.	Liquid intrusion into the terminal connection area might occur causing an electrical intermittent or short condition. In the event of severe terminal corrosion, an open condition might occur.
DO: Operate with gasoline based internal combustion engines.	Other fuels or combustion designs may require additional design considerations.
DO: The power feed line should be fused.	This could protect the system in the event of an electrical short.

ACTION	REASON
DO: The module heat sink and back plate must not be used as a connection point when jump starting the engine.	The high level of voltage and current which the module could be subjected to, could cause module performance degradation or failure.
DO: Connection of the module back plate to vehicle ground is desirable whenever possible.	This greatly reduces potential ground loops and acts as a heat transfer source from the module.
DO: The ignition system ground wire should be kept as short as possible. And, when permissible, should be grounded at the same engine block position as the engine controller.	This would greatly reduce the possible of unwanted electrical ground loops.
DO: The electrical wiring to the ignition system should be routed so that the conductors are protected from excessive heat, damage, and wear.	Helps prevent electrical intermittent, open or shorted operating conditions.
DO: Ignition secondary leads should not be routed with the ignition primary harness or any other electrical harness.	Voltage spikes can be transmitted from the secondary cables into other leads which are in close. This could create a component performance degradation or failure condition.
DO: Spark plug wires(secondary leads) & primary wiring: - must not contact sharp surface. - must not be under tension between fixed points. - must be clear of moving parts (belts, fan, etc…). - must be protected from or kept at least 125 mm away from radiant heat source exceeding 400 F. - must be protected from environmental damage (dirt, splash, oils, fluids, etc.…). - must be retained, secured or insulated to prevent pinching, misrouting, rattles, and squeaks.	Spark plug wires carry very high voltage (30,000 volt). If the secondary lead loses its dielectric characteristics thru being nicked, cut , chaffed, then an arc thru to a nearby ground could take place. This kind of condition could lead to misfire, no start, or premature failure of ignition system.
DO: Not all fasteners are designed for repeat use. Beware of fastener specifications. All harnesses should be supported within 6" of a mating connection.	Adequate retention force might not be achieved if the fastener is not designed to be reused. Mating connections are not designed to support the weight of the harness assembly.
DO: For removing spark plugs follow the following steps: 1- Grasp the spark plug boot and gently rotate 90° ; and then pull the spark plug boot and cable away from the spark plug. 2- Before removing spark plug, brush or air blast dirt away from the well areas. 3- Use correct size deep socket wrench to loosen each spark plug one or two turns.	To remove spark plugs from Aluminum heads, allow the engine to cool. The heat of the engine, in combination with a spark plug that is still hot, may cause the spark plug threads to strip the cylinder head upon removal. Use goggles to protect eyes from dirt when applying compressed air to spark plug wells.

ACTION	REASON
DO: Cleaning a spark plug could be done as follow: 1- Wipe all spark plug surfaces clean….remove oil, water, dirt and moist residues. 2- If the firing end of spark plug has oily or wet deposit, brush the spark plug in an approved, non-flammable and non-toxic solvent. Then dry the spark plug thoroughly with compressed air. 3- Use a propane torch to dry wet-fuel fouled plugs. Allow the torch flame to enter up the center electrode insulator. Allow plug to cool down. 4- If the spark plug threads have carbon & scale deposits, clean with wire brush, taking care not to injure the electrode or the insulator tip.	Cleaning a spark plug will reduce the voltage required for an electrical arc(spark) across the electrodes. Cleaning & re-gapping will not restore a used spark plug to a new condition. It may be more economical and efficient to replace used spark plugs with new plugs instead of cleaning. Sooted plugs should be replaced. Do not cool by using water or any liquid. Clean threads permit easier installation and proper seating which will maximize transfer heat away from the plug.
DO: Regap spark plugs to the exact measurement specified by the engine manufacturer to keep the best fuel economy and proper engine performance: 1- Use round wire-type gauge for an accurate measure of gap on all used spark plugs. 2- When gapping a spark plug only the side electrode is moved. The center electrode must not be moved.	Too wide a gap could cause the plug to misfire (higher required ignition voltage). Too narrow of a gap could affect idle stability. A flat gauge can't accurately measure the spark plug on used plugs.
DO: When replacing spark plugs with new ones, always use equivalent plugs with same heat range, thread, size, etc….	Higher heat range plug (hotter plug) could lead to pre-ignition & possible piston damage. Lower heat range (colder plug) could lead to cold fouling & emission problem.
DO: For installing spark plugs follow the following steps: 1- Make sure the cylinder head threads and spark plug threads are clean. Make sure the spark plug thread is free of dings and burrs. If necessary, use a thread chaser and seat cleaning tool. 2- Make sure the spark plug gasket seat is clean, and then thread the gasket to fit flush against the gasket seat. Tapered seat plugs do not require gaskets. 3- Screw the spark plugs finger-tight into the cylinder head. Then, use a torque wrench to tighten spark plugs following manufacturer's recommendation. Torque is different for various plug type & cylinder head material.	If the thread is damage, it prevents a good heat transform from the shell to the cylinder head. Do not use any type of anti-seize compound on spark plug threads. Doing this will decrease the amount of friction between the threads. The result of the lowered friction is that when the spark plug is torqued to the proper specification, the spark plug is turned too far into the cylinder head. This increases the likelihood of pulling or stripping the threads in the cylinder head. Over tightening of a spark plug can cause stretching of the spark plug shell and could allow blowby to pass thru the gasket seal between the shell and insulator. Over-tightening also results in extremely difficult removal.

3.12.7 Fuel Pump

3.12.7.1 Description and Working Principle

Fuel Pump supplies fuel to engine at system pressure. Fuel Pump is mounted to fuel tank at top and supplies fuel to engine through hoses. Fuel Pump consists of Fuel Pump to generate the fuel flow and pressure regulator to regulate the fuel pressure.

When power is supplied to fuel pump, motor in pump assembly rotates the impeller. Impeller in turn draws the fuel from strainer and pumps the flow to generate the system pressure.

Pressure Regulator is a diaphragm type mechanical device. Fuel flow from filter enters in the inlet of pressure regulator. Pressure regulator regulates the fuel pressure at a set pressure by releasing the excessive fuel flow to fuel tank.

3.12.7.2 Operating Conditions

- Fuel Pump needs to be mounted on Fuel Tank Top according to the installation instructions.
- Fuel Pump is intended to use with gasoline. However if the fuel contains ethanol, please contact vehicle manufacture to check whether the fuel pump module itself can survive or not.
- Make sure there is at least 3 liters of gasoline in the fuel tank before priming for first time (don't run the pump dry).

3.12.7.3 Service Procedure

Precautions:

Before attempting any service on fuel system, following cautions should be always followed for personal safety and to avoid system damages.

- Disconnect negative cable at battery.
- DO NOT smoke, and place 'No SMOKING" sign near work area.
- Make sure to have fire extinguisher handy.

- Make sure to perform work in well ventilated area and away from any open fire/flames.
- Wear Safety glasses.
- To relieve fuel vapor pressure in fuel tank, remove fuel filler cap fuel filler neck and then reinstall it.
- As fuel lines are at high pressures when the engine is stopped, loosening or disconnecting fuel line will cause dangerous spout of fuel. Before loosening/ disconnecting fuel lines, please follow the ***'Fuel Pressure Relief Procedure'*** described in this section.
- Small amount of fuel may drip after the fuel lines are disconnected. In order to reduce the risk of personal injury, cover the pipe / hose ends with suitable blind with no rust or contamination.
- After servicing, make sure that the fuel hoses and clamps are connected according to the hose fitment instructions given in vehicle instruction manual.
- After servicing, please follow the ***'Fuel Leakage Check Procedure'*** described in this section.
- After servicing make sure to fill at least 3 liters gasoline before pump is primed (ignition key should be turned on only after ensuring there is minimum 3 liters of fuel in the fuel tank)

Fuel Module Diagnosis:

Step	Action	Yes	No
1	Switch on Ignition key. Fuel Pump primes for 3 seconds when the ignition key is ON. Check for fuel pump running noise for 3 seconds after ignition key is ON.	If fuel pump running noise can be heard, go to step 4.	If fuel pump running noise cannot be heard, go to step 2.
2	Disconnect Fuel Pump coupler. Check voltage at harness coupler. Is the voltage within 10-14V?	Go to step 3	Check the electrical circuit from Ignition to Fuel Pump.

Step	Action	Yes	No
3	Connect 12V DC power supply (battery) to Fuel Pump. Make sure that enough fuel available in fuel tank to avoid fuel pump running dry. Is the fuel pump running?	1. Check electrical circuit from Fuel Pump to ECU. 2. Check ECU.	1. Check Fuel Pump Harness integrity. 2. Check Fuel Pump.
4	Check fuel system pressure at Injector inlet (with a T-joint) while engine is running in idle condition. Is the pressure about 300 kPa?	Fuel Pump Operation Normal	Go to Step 5
5	Is the Pressure below 300kPa too much?	1. Check for leakages from hoses, hose joints; 2. Check Fuel Pump; 3. Check Pressure Regulator;	1. Clogged Filter; 2. Kink/ Blockage in Fuel Hoses; 3. Check Regulator.

3.12.7.4 Fuel Pump Removal

- Relieve fuel pressure in fuel lines referring to the ***'Fuel Pressure Relief Procedure'*** provided in this section;
- Disconnect negative cable at battery;
- Disconnect Fuel Pump wire coupler;
- Drain the fuel in fuel tank thru fuel filler with help of hand pump (siphon). Collect the fuel in approved container for contamination and safety;
- Disconnect the fuel hoses from Fuel Pump by using standard tools;
- Remove the fuel tank from vehicle;
- Place the fuel tank with bottom up condition. Care to be taken not to cause any scratches/ damages on fuel tank;
- Open the Fuel Pump mounting bolts;
- Take out Fuel Pump assembly from fuel tank with care.

3.12.7.5 Fuel Pump Installation

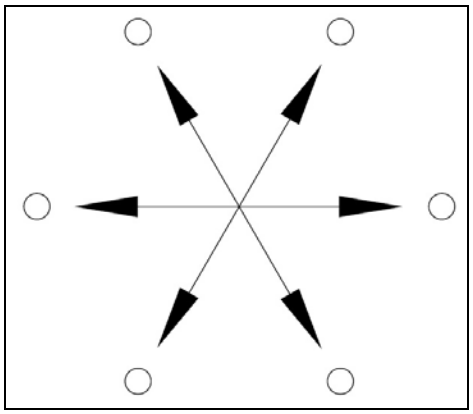

● Replace the Fuel Pump gasket in Fuel Pump assembly with a new one. Old / Used gaskets can cause leakages.

● Place the bolts on Fuel Pump cover and tighten the bolts gradually in star pattern sequence to apply equal compression on gasket. It is shown as right.

Bolt Tightening Torque: 10 Nm. Fuel Pump is installed with the M6×10 bolts. Use designated bolts only. Follow the tightening torque and tightening sequence instruction. Over torque and miss-sequence can cause unequal compression of gasket and leakage.

● Install the Fuel Tank to vehicle;

● Connect for fuel hoses with suitable hose clamps;

● Connect Fuel Pump coupler;

● Follow ***'Fuel Leakage Check Procedure'*** to check any leakage before the engine is started.

3.12.7.6 Fuel Pressure Relief Procedure

Caution: This work must not be done when engine is hot.

After making sure that engine is cold, relieve fuel pressure as follows.

● Place vehicle gear in 'Neutral'.

● Disconnect Fuel Pump electrical coupler from vehicle harness.

● Start engine and run till it stops due to lack of fuel. Repeat ignition key ON and OFF for 2 ~ 3 times of about 3 seconds each time to relieve fuel pressure in lines. Fuel Connections are now safe for servicing.

● Upon the completion of servicing, Connect Fuel Pump Connector to Vehicle Harness.

3.12.7.7 Fuel Leakage Check Procedure:

After performing any service on fuel system, check to make sure that there are no fuel leakages as below.

● Fill about 3 ~ 5 liters of fuel in tank.

● Turn Ignition key to ON position for 3 seconds (to operate fuel pump) and then turn to OFF position.

Repeat this for 3 ~ 4 times to apply fuel pressure in fuel lines.

● In this state, check to see that there are no fuel leakage from any part of fuel system (Fuel Tank, Hoses, Hose Joints, etc)

3.12.8 Motor Scanner (for MT05 EMS)

3.12.8.1 Precautions

● Motor-Scanner is a precision instrument and should be protected from vibration and impact.

● If the unit does not run correctly or the screen is unstable when first turned on, disconnect it from the main lead and try again.

● Make sure the DLC is always firmly inserted into the diagnostic socket.

● Never test electrical signals that exceed the limit of specifications.

● Test cannot be performed by the person who is driving the car.

● This unit should be used and stored in the following conditions:
Ambient temperature: 0~50 ℃
Relative humidity: < 90%

Note: This instruction is only applicable to Delphi Motor Scanner. For other Motor Scanner, please refer to the Instructions for it.

3.12.8.2 Configurations

Delphi Motor scanner consists of 2 main part: the main units (with diagnostic main cable) and diagnostic connector link (one end is 6PIN connector; the other is the interface for connecting diagnostic main cable). They are shown as below:

The 6 PIN diagnostic connector link cable and USB type main unit's software update cable are in the delivered package.

Delphi Motor scanner

A: Main Unit

B: Diagnostic Main Cable

C: Diagnostic Connector Link

Outline of Main Unit

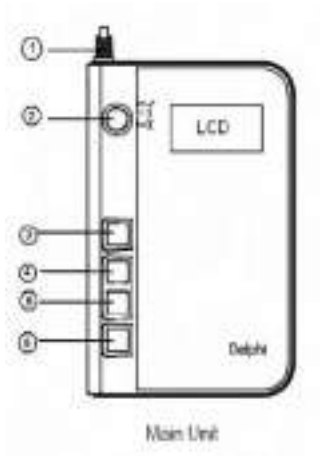

1	Diagnostic Cable	To connect the unit and vehicle socket for diagnosi
2	reserved Key	The Key is reserved for future
3	[⏮] Key	To return to the previous interface.
4	[↑] Key	To move the cursor to upper item in the menu
5	[↓] Key	To move the cursor to down item in the menu
6	[↵] Key	To confirm and execute this operation.

3.12.8.3 Preparations Connection

● Find the 6PIN diagnostic socket on the motor.

● Connect one end of the diagnostic main cable to the main unit, and the other end to diagnostic socket on the motor, tighten the screws.

Normal Power – on Display

When power is on normally, the unit will display:

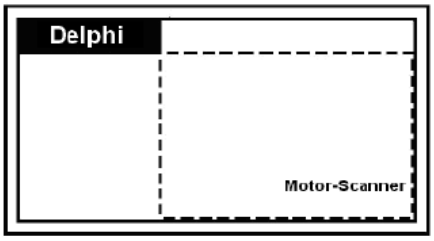

Seconds later, the unit will display:

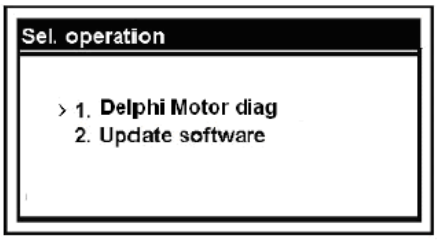

3.12.8.4 Functions

Delphi Motor-Scanner can be used to diagnose Delphi Engine Management System with functions: Read DTC, Clear DTC, Data Stream, Status Stream, and Record Data.

Operations

When the unit is powered up, the screen will display the interface as below.

Here, we take diagnostic function for demonstration.

Select 1 and press [↵] key, it will display an interface for language selection, as shown right;

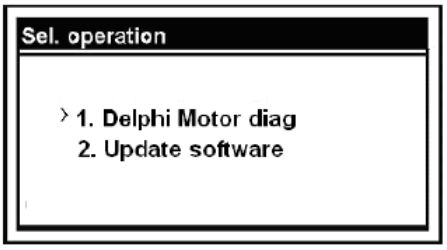

Select 'English' and press [↵] key, it will display information about the diagnostic software version, press [↵] to continue, the interface will display as right;

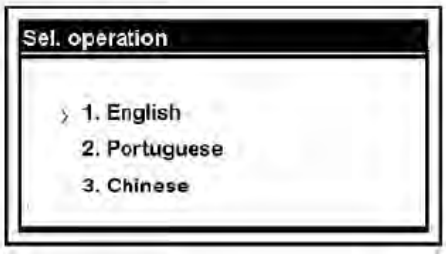

Diagnostic Function

Here, we take 'diagnostic function' for demonstration.

Select 'diagnostic function' and press [↵], the screen will display an interface to indicate 'Delphi-3' diagnostic connector should be used.

Press [↵], the screen will display engine information as right;

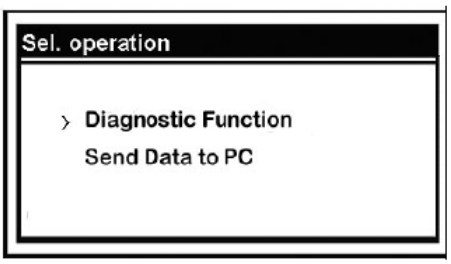

Press [↵], with 'accessing system' fleeting on the screen, then, it will display as right;

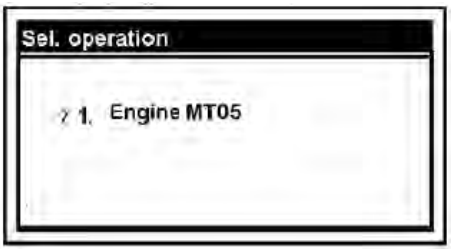

Available functions are as follows:

- Read DTC
- Clear DTC
- Data Stream
- Status Stream
- Record Data

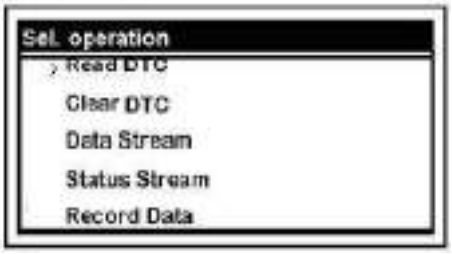

Press [↑] or [↓] key to select function you needed.

1. Read DTC

Select 'Read DTC', and press [↵] , it will display fault code as right;

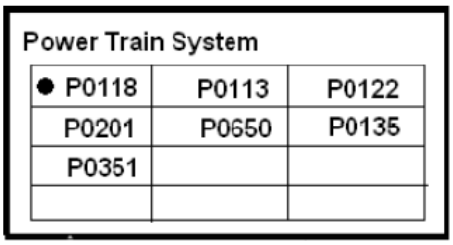

Press [↑] or [↓] key to move '●' icon, and select fault code, take 'P0118' for example, it's selected when there is '●' in front of it, press [↵], the screen will display detailed information of the code, as right;

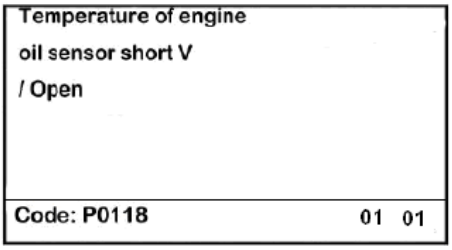

2. Clear DTC

Select ‘Clear DTC’ and press, it will display as right;

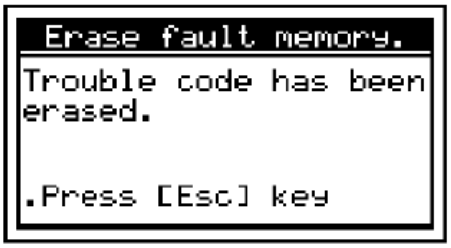

3. Data Stream

Select ‘Data Stream’ and press [↵] , it will display as right;

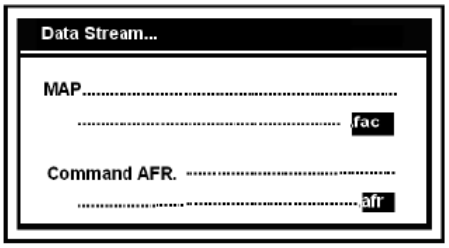

Press [↑] or [↓] key for page up/down to view more. Press [⏮] key to exit.

4. Status Stream

Select ‘Status Stream’ and press [↵] , the interface will display as right;

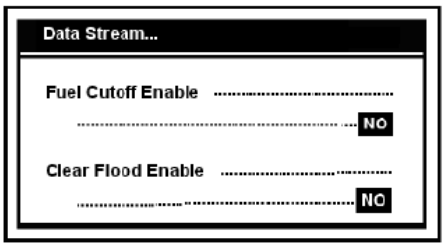

Press [↑] or [↓] key for page up/down to view more. Press [⏮] key to exit.

3.12.8.5 MT05 ECU Malf Code

Malf code	Description
P0107	MAP Circuit Low Voltage or Open
P0108	MAP Circuit High Voltage
P0112	IAT Circuit Low Voltage
P0113	IAT Circuit High Voltage or Open
P0117	Coolant/Oil Temperature Sensor Circuit Low Voltage
P0118	Coolant/Oil Temperature Sensor Circuit High Voltage or Open
P0122	TPS Circuit Low Voltage or Open
P0123	TPS Circuit High Voltage
P0131	O2A Circuit Low Voltage
P0132	O2A Circuit High Voltage
P0031	O2A Heater Circuit High Voltage
P0032	O2A Heater Circuit Low Voltage
P0201	Injector 1 Circuit Malfunction
P0202	Injector 2 Circuit Malfunction
P0230	FPR Coil Circuit Low Voltage or Open
P0232	FPR Coil Circuit High Voltage
P0336	CKP Sensor Noisy Signal
P0337	CKP Sensor No Signal
P0351	Cylinder 1 Ignition Coil Malfunction
P0352	Cylinder 2 Ignition Coil Malfunction
P0505	Idle Speed Control Error
P0562	System Voltage Low
P0563	System Voltage High
P0650	MIL Circuit Malfunction
P1693	Tachometer Circuit Low Voltage
P1694	Tachometer Circuit High Voltage

NOTES

CHAPTER 4 CHASSIS

WARNING

The parts of different types/ variants/ versions maybe un-interchangeable, even some parts have almost same appearance. Always refer to Parts Manual of each CUV model for spare parts information and service.

4.1 FRONT A-ARM REPLACEMENT

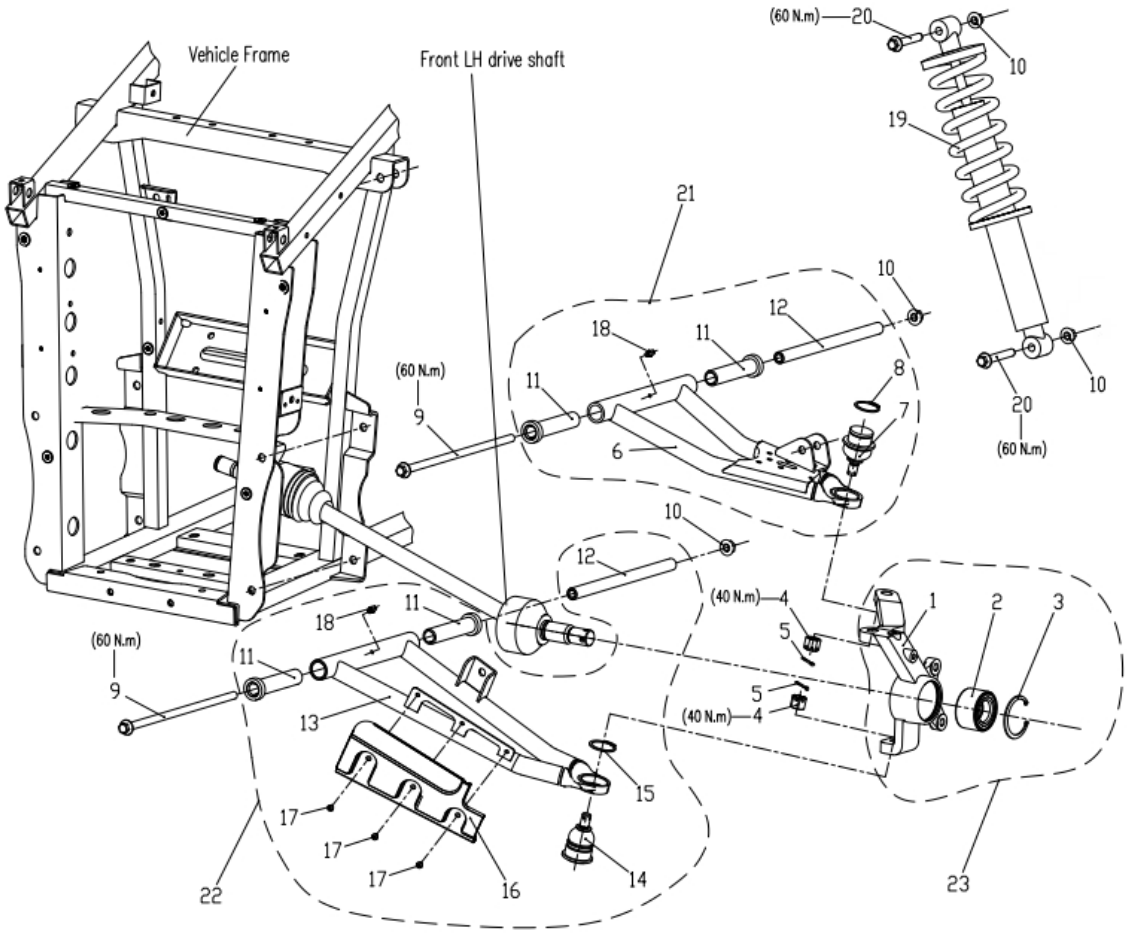

1. Carrier Bearing,Front,Lh； 2. Bearing； 3. Circlip 55
4. Nut M12×1.25； 5. Pin 3.2×22； 6. Arm Upper Frt Lh
7. Ball Joint,Upper； 8. Circlip 32； 9. Scr Hxfl,Frt Arm
10. Nut M10； 11. Bushing,Long； 12. Shaft Pivot
13. Arm Lwr Frt Lh； 14. Ball Joint,Lwr； 15. Circlip 34
16. Cover，Arm Lwr Frt Lh； 17. Screw M5X10； 18. Grease Fitting M6
19. Front Shock Absorber Assy； 20. Bolt M10X1.25X57； 21. Arm Upper Frt Lh Assy
22. Arm Lwr Frt Lh Assy； 23. Carrier Bearing Wheel Lh Assy

1.Elevate and safely support vehicle with weight removed from front wheel(s).

2.Remove the wheel nuts and wheel.
NOTE: To ease the removal of the spindle bolt,remove the hub cap and loosen the spindle bolts before removing the wheel.

3.Remove the brake caliper. Suspend the brake caliper from the frame with a wire.
NOTE: Do not let the brake caliper hand from the brake line or damage may occur.

4.Remove the spindle nut, and washer. Remove the hub assy by sliding it off of the shaft.

5.Remove cotter pin from ball joint stud at wheel end of A- arm and loosen nut until it is flush with end of stud.

6.Using a soft face hammer, peen nut to loosen A- arm from bolt. Remove nut and A-arm from hub strut assembly.

7.Loosen and remove two bolts on A-arm, and remove A-arm.

8.Examine A-arm bushing. Replace if worn or tore. Discard hardware.

9.Install new A-arm assembly onto vehicle frame. Install new bolts and new nuts.
NOTE:
Tighten the nuts only finger-tighten at this time. They will be tightened to the final torque after the front wheels are installed and the vehicle is on the ground.

⚠ WARNING

DO NOT reuse old bolts. Serious injury or death could result if fasteners come loose during operation.

10.Attach A-arm to strut assembly. Tighten ball joint nut to 25 ft. lbs. (35 Nm). If cotter pin holes are not aligned, tighten nut slightly to align. Install a new cotter pin with open ends toward rear of machine. Bend both ends in opposite directions around nut.

11. Re-install the hub assy. Install washer, and the spindle nut to 103 ft.lbs (140Nm). Aim the gap of the shaft for use the chisel to hit the nut until it locked.

12.Install the brake caliper. Apply Loctite™ 243 to screw threads of the bolts and torque bolts to 18ft. lbs. (25 Nm).

13.Install the wheel and torque nuts to 55ft. lbs. (75 Nm).

14.lower the vehicle to the ground. Apply Loctite™ 243 to screw threads of the A arm bolts and torque bolts to 37-44 ft. lbs. (50-60 Nm).

⚠ WARNING

Upon A-arm installation completion, test vehicle at low speeds before putting into regular service.

4.2 REAR A-ARM REPLACEMENT

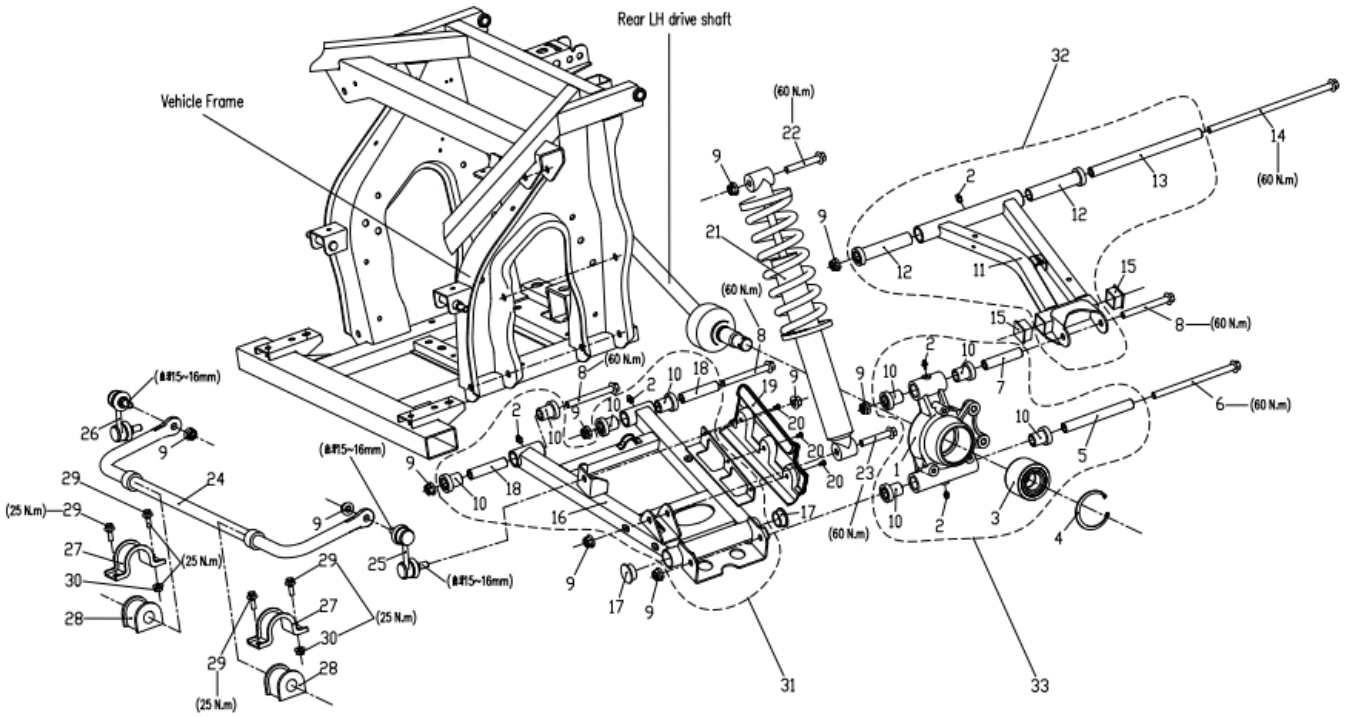

1. Carrier Bearing Wheel Rear Lh；2. Grease Fitting M6； 3. Bearing
4. Circlip 63； 5. Shaft Pivot ,Lwr； 6. Scr Hxfl,Rear Arm,Lwr
7. Shaft Pivot ,Upper； 8. Bolt M10X1.25X90； 9.Nut M10
10. Bushing,Short； 11. Arm Upper Rear Lh； 12. Bushing,Long
13. Shaft,Rear Upper Arm； 14. Scr Hxfl，Rear Upper Arm； 15. Square Rubber Plug
16. Arm Lwr Rear Lh； 17. Plug； 18. Shaft,Rear Lwr Arm
19. Cover，Arm Lwr Rear Lh； 20. Screw M5X10； 21. Rear Shock Absorber Assy
22. Bolt M10X1.25X62.5； 23. Bolt M10X1.25X57； 24. Stabilizer Bar
25. Ball Pin, Lh； 26. Ball Pin, Rh； 27. Bracket Stabilizer
28. Bushing Stabilizer； 29. Bolt M8X20； 30. Nut M8
31. Arm Lwr Rear Lh Assy； 32. Arm Upper Rear Lh Assy；
33. Carrier Bearing Wheel Rear Lh Assy

1. Elevate and safely support vehicle with weight removed from the rear wheel(s).

2. Remove the wheel nuts and wheel.

NOTE: To ease the removal of the spindle bolt, remove the hub cap and loosen the spindle bolts before removing the wheel.

3. Remove the brake caliper. Suspend the brake caliper from the frame with a wire.
   NOTE: Do not let the brake caliper hand from the brake line or damage may occur.

4. Remove the spindle nut, and washer. Remove the hub assy by sliding it off of the shaft.

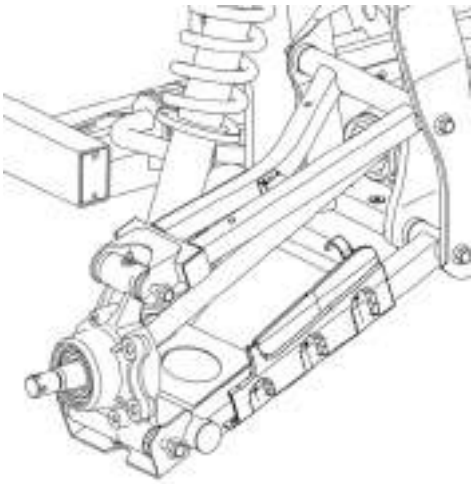

5. Loosen two bolts that secure the rear knuckle to the A-arm. Remove the rear knuckle assembly by sliding it off of the shaft.

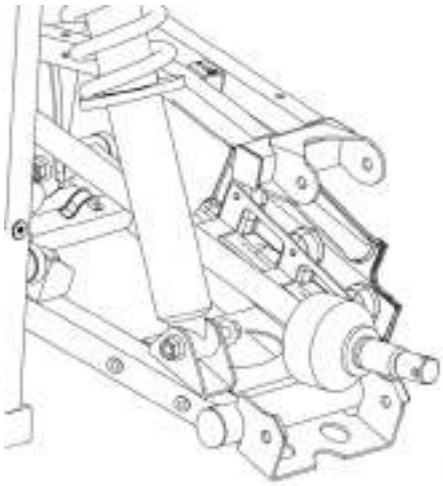

6. Remove the bolt that secures the shock and coil to the lower A-arm.

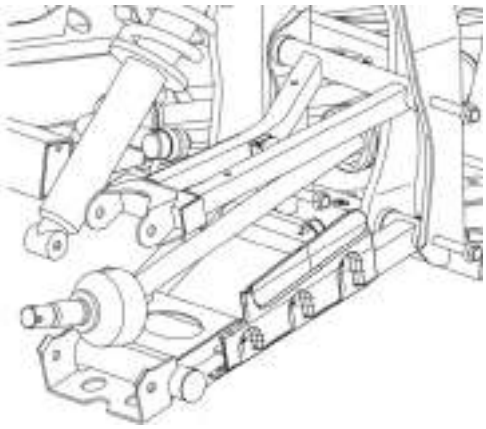

7. Loosen two bolts that secure the A-arm to frame by alternating each about 1/3 of the way until A-arm can be removed. Perform this procedure on the upper A-arm.

8. Examine the A-arm bushing and A-arm shaft. Replace if worn. Discard hardware.

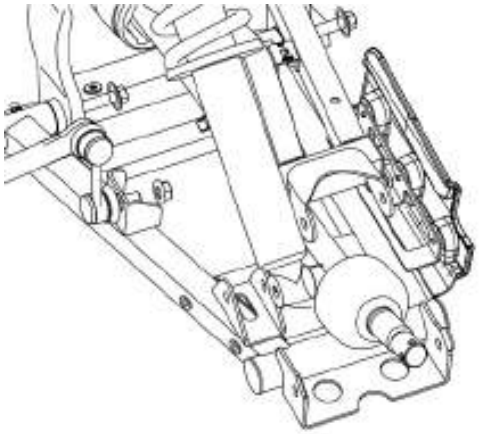

9. Remove the bottom stabilizer bar nut.

10. Loosen two bolts that secure the A –arm bushing to frame by alternating each about 1/3 of the way until the A-arm can be removed. The lower A-arm should now be free to remove.

11. Insert new A-arm bushings and new A-arm shaft into new A-arm.

12. Install new A-arm assembly onto vehicle frame. Apply Loctite™ 242 to screw threads of the A arm bolts and torque bolts to 44 ft. lbs. (60 Nm).

⚠ WARNING

DO NOT reuse old bolts. Serious injury or death could result if fasteners come loose during operation.

13. Attach A-arm to rear knuckle. Tighten upper and lower bolts to 44 ft. lbs. (60 Nm).

14. Install the shock and tighten shock bolt to 44 ft. lbs. (60 Nm).

15. Install the stabilizer and tighten nut.

16. Re-install the hub assy. Install washer, and the spindle nut to 103 ft.lbs (140Nm). Aim the gap of the shaft for use the chisel to hit the nut until it locked.

17. Install the brake caliper. Apply Loctite™ 243 to screw threads of the bolts and torque bolts to 18ft. lbs. (25 Nm).

18. Install the wheel and torque nuts to 55ft. lbs. (75 Nm).

19. lower the vehicle to the ground. Apply Loctite™ 243 to screw threads of the A arm bolts and torque bolts to 44 ft. lbs. (60 Nm).

⚠ WARNING

Upon A-arm installation completion, test vehicle at low speeds before putting into regular service.

4.3 REAR STABILIZER BAR REMOVAL/INSTALLATION

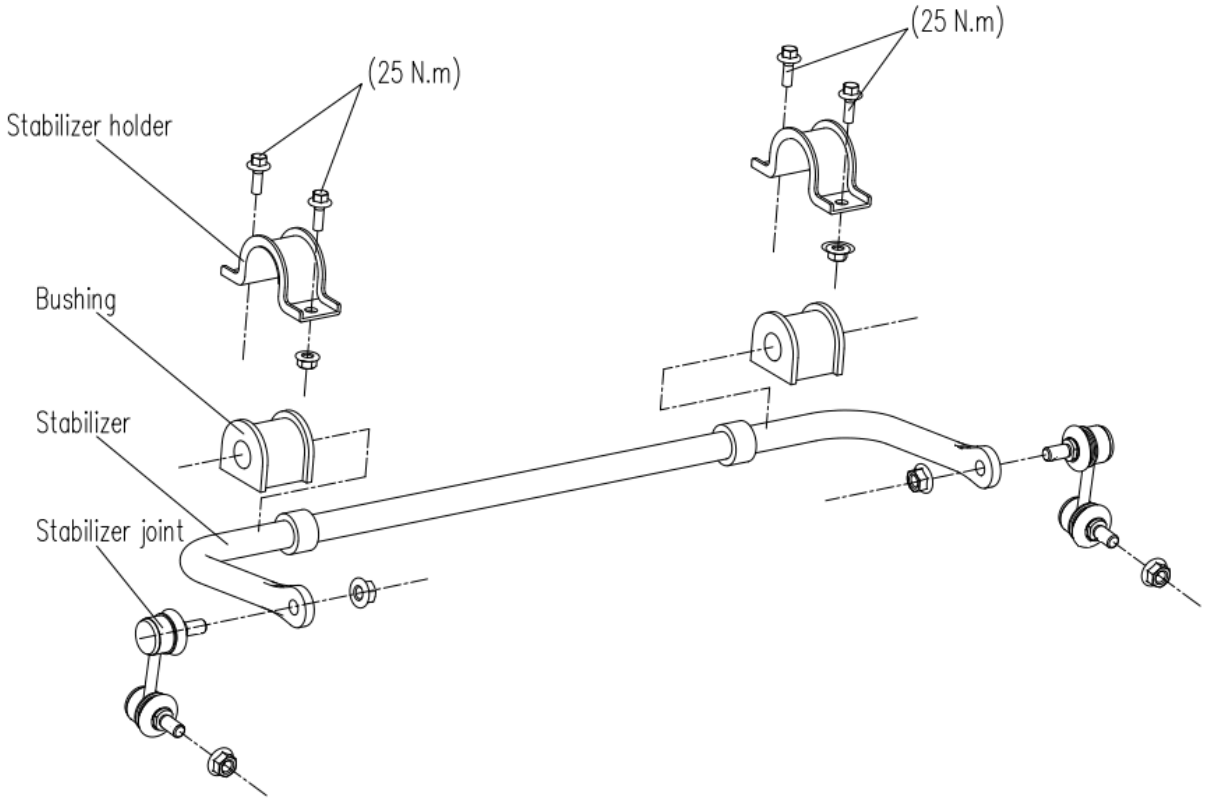

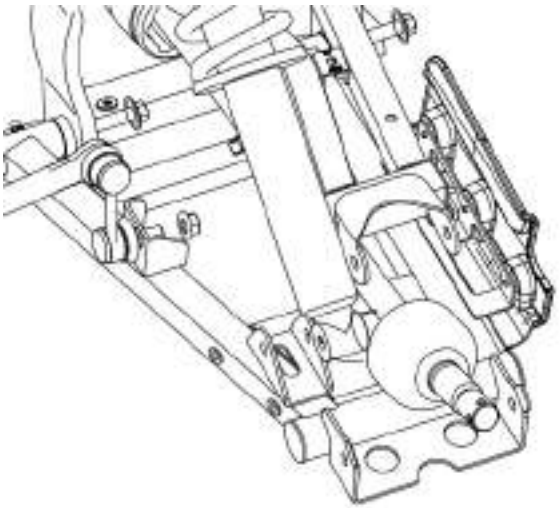

1. Elevate and safely support vehicle with weight removed from the rear wheel(s).
2. Remove the rear wheel to gain access to the stabilizer bar, each side.
3. Remove the stabilizer bar nut from the lower A-arm, each side.

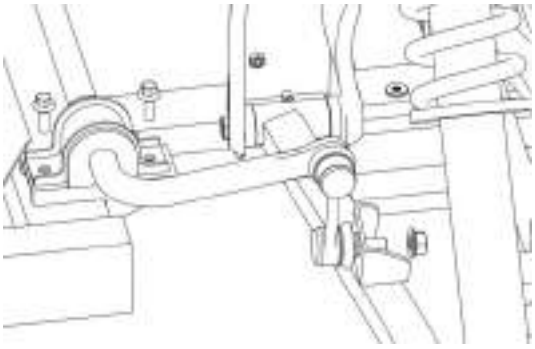

4. Remove the two bolts that secure the stabilizer bar to the main frame, each side.
5. Remove the stabilizer from the frame.
6. Inspect the stabilizer bar. Inspect the bushings and replace if needed.
7. Inspect the stabilizer joint and replace if needed.
8. Reverse the procedure for installation.Torque the stabilizer bolts to 18.5 ft.lbs (25 Nm).

4.4 BOX REMOVAL/INSTALLATION

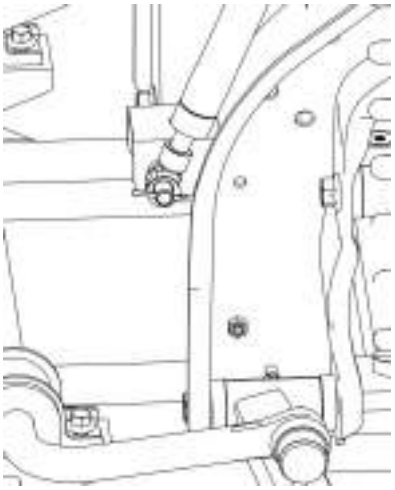

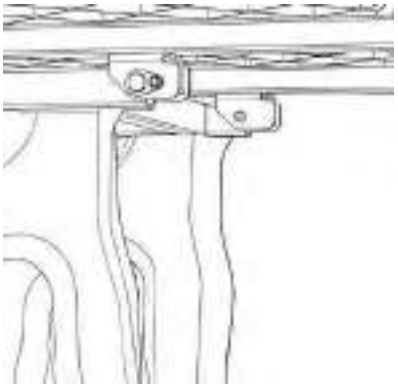

Box Removal

1. Disconnect taillight transition line at lower right of the Box from the wiring harness.
2. Lift the box into the dump position.
3. Remove the box shock pin from the frame.
4. Remove the shocks from the shock brackets. Let the shocks fully extend.

CAUTION: Safely support the box during the rest of the removal process. The box is not as stable with the shocks removed.

5. Remove the hinge pin.

CAUTION: Safely support the box during the rest of the removal process. The box is not as stable with the hinge pin removed.

6. With the hinge pins removed, remove the box from the frame. Two people maybe needed to remove the bed from the frame.

CAUTION: Use caution when removing the box. It is recommended to have two people to carefully remove the box from the frame.

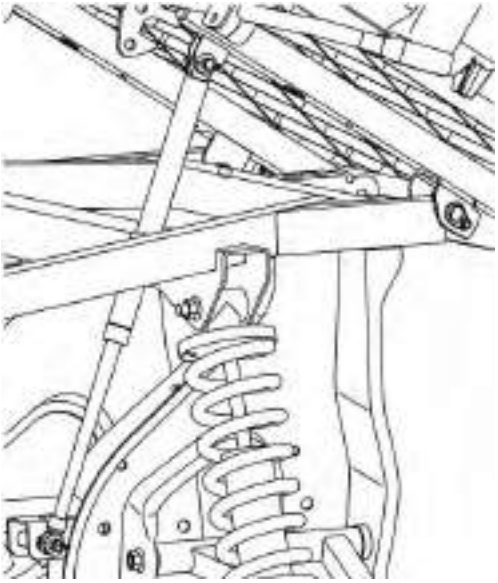

Box Installation

1. Place the box onto the frame. Align the hinges of the box with the frame.
2. Install the box hinges.
3. Secure the box hinges with the bolts.
4. With the hinges installed, decompress the box shocks and place them into the shock brackets on the frame.
5. Secure the box shocks with the shock pin.
6. Lower the box and secure the latch.
7. Connect taillight transition line to the wiring harness.

4.5 STEERING ASSEMBLY REMOVAL/INSTALLATION

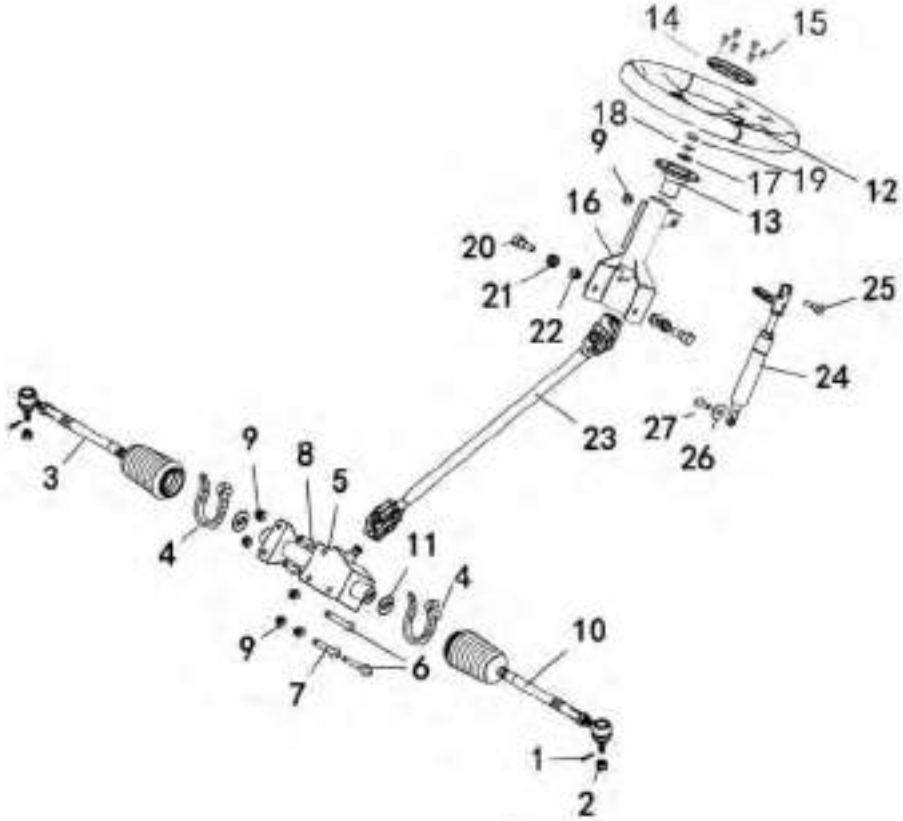

1. Pin 2.5×25；
2.Nut M10X1.25；
3. Steering Tie-Rod,Rh
4. Tie；
5. Steering Motor；
6. Bolt M8X95
7. Bolt M8X80；
8. Bolt M8X20；
9. Nut M8
10. Steering Tie-Rod,Lh；
11. Steering Motor Sheet；
12. Steering Wheel
13. Steering Wheel Holder；
14. Steering Cover；
15. Screw M5X10
16. Steering Column Assy.；
17. Washer 12；
18. Washer Spring 12
19. Nut M12；
20. Shoulder Bolt M10×1.25×30；
21. Bushing For Adjustable Steering Wheel
22. Nut M10；
23. Shaft Steering；
24. Adjustment Cylinder
25. Shoulder Bolt M8×1.25×30；
26. Washer 6；
27. Bolt M6X12

1. With the steering wheel cover bolts removed, remove the steering wheel cover and the steering wheel.
2. With the steering wheel holder nut removed, remove the steering wheel holder.
3. Remove the steering column bolts.
4. Remove the upper of the steering column.
5. Remove the cotter pins and the tie rod end bolts (both sides).
6. With the cover bolts removed, remove the steering assy and the lower of the steering column.
7. Reverse the procedure for installation.

NOTES

CHAPTER 5 FINAL DRIVE

WARNING

The parts of different types/ variants/ versions maybe un-interchangeable, even some parts have almost same appearance. Always refer to Parts Manual of each UTV model for spare parts information and service.

5.1 WHEEL, HUB, AND SPINDLE TORQUE TABLE

Item	Specification
Front Wheel Nuts	55 Ft.Lbs 75 Nm
Rear Wheel Nuts	55 Ft.Lbs 75 Nm
Front Hub Nut on Spindle/ outer CV joint	103 Ft.Lbs 140 Nm
Rear Hub Retaining Nut	103Ft.Lbs 140 Nm

Refer to exploded views and text for torque values of other fasteners.

CAUTION: Locking nuts, and bolts with pre-applied locking agent should be replaced if removed. The self- locking properties of the nut or bolt are reduced or destroyed during removal.

5.2 FRONT HUB EXPLODED VIEW

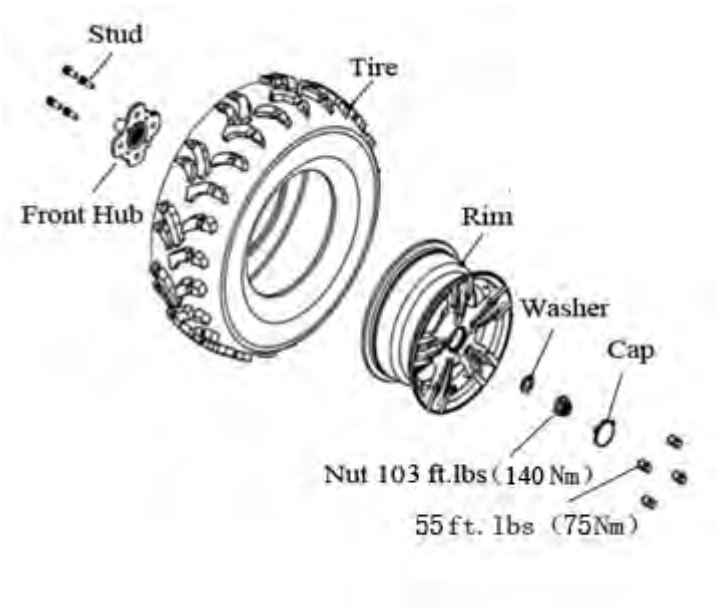

5.3 FRONT HUB REMOVAL/INSPECTION

1. Elevate front end and safely support machine under footrest/frame area.

CAUTION: Serious injury may result if machine tips or falls. Be sure machine is secure before beginning this service procedure. Wear eye protection when removing bearings and seals.

2. Check bearings for side play by grasping the tire/Wheel firmly and checking for movement.

3. Grasp the top and bottom of the tire. The tire should rotate smoothly without binding or rough spots.
4. Remove wheel nuts and wheel.
5. Remove the two brake caliper mounting bolts.

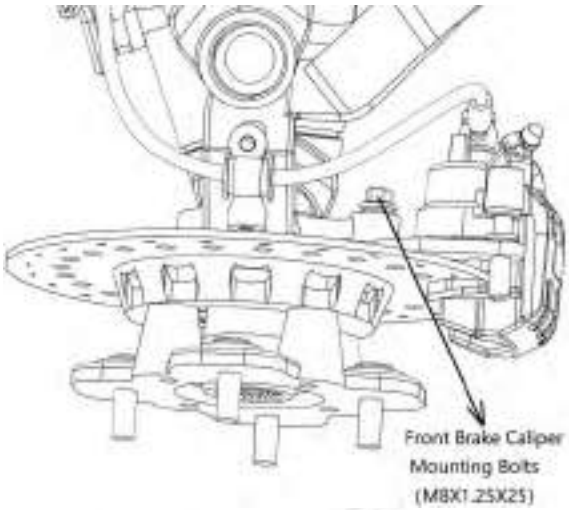

CAUTION: Do not hang the caliper by the brake line. Use wire to hang the caliper to prevent possible damage to the brake line.

6. Remove front spindle nut, and washer.
7. Remove front hub assembly.

8. Rotate each bearing by hand and check for smooth rotation. Visually inspect bearing for moisture, dirt, or corrosion, or roughness is evident.

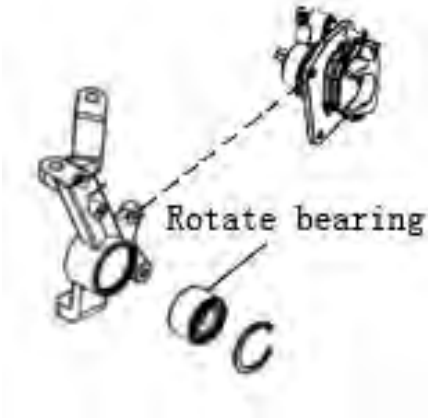

5.4 FRONT HUB INSTALLATION

1. Inspect the hub strut bearing surface for wear or damage.
2. Apply grease to drive axle spindle.
3. Install spindle through the backside of the hub strut. Install the hub onto the spindle.
4. Install spindle nut and tighten to 103 ft.lbs (140Nm).
5. Knock on the edge of the spindle nut, so that it can be clamped into the limit slot.

6. Install brake caliper using new bolts. (Apply Loctite™ 243 to threads) Tighten bolts to 18 ft.lbs (25Nm)

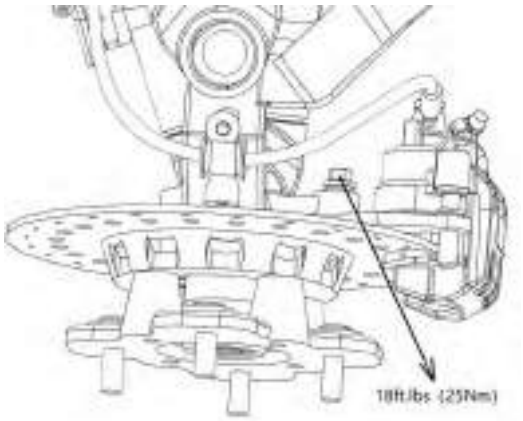

CAUTION: New bolts have a pre-applied locking agent which is destroyed bolts upon removal. Always use new brake caliper mounting bolts upon assembly.

7. Install wheel and wheel nuts and tighten evenly in a cross pattern to specified torque.

5.5 FRONT HUB BEARING REPLACEMENT

1. Remove outer snap ring.

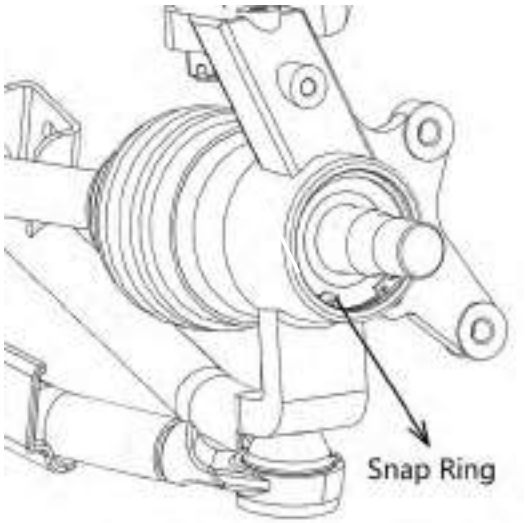

2. From the back side, tap on the outer bearing race with a drift punch in the reliefs as shown.
3. Drive bearing out evenly by tapping on outer race only. Once bearing is at bottom of casting, support casting on outer edges so bearing can be removed.

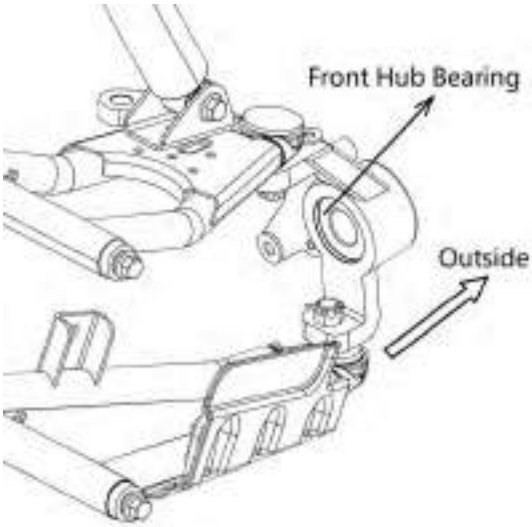

4. Inspect bearing.

NOTE: Due to extremely close tolerances and minimal wear, the bearings must be inspected visually, and by feel. While rotating bearings by hand, inspect for rough spots, discoloration, or corrosion. The bearings should turn smoothly and quietly, with no detectable up and down movement and minimal movement sideways between inner and outer race.

5. Inspect bearing housing for scratches, wear or damage. Replace new if damaged.

5.6 FRONT DRIVE AXLE REMOVAL/INSPECTION

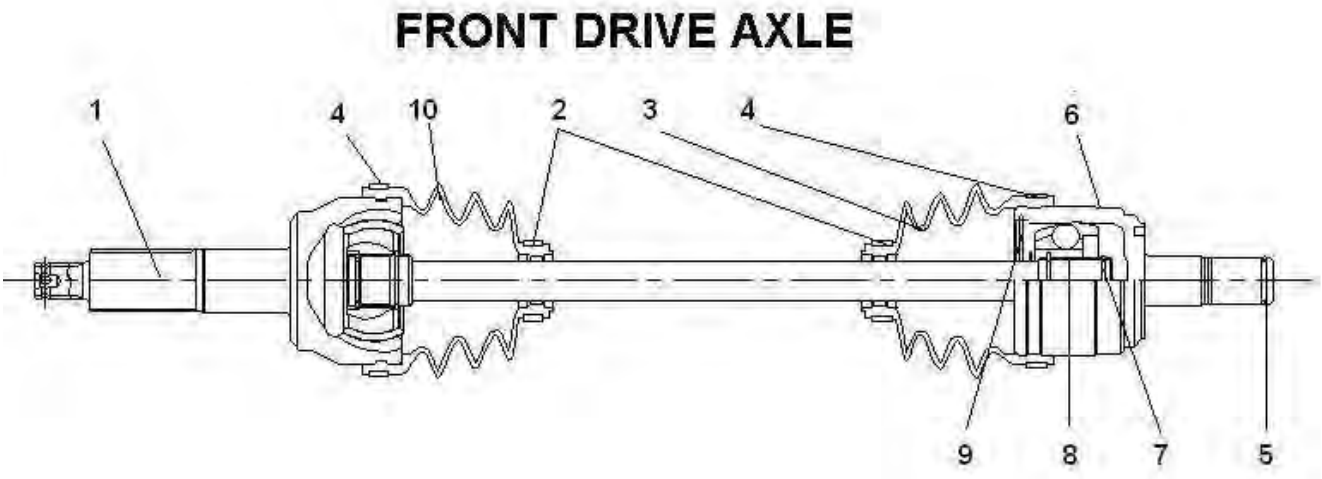

NOTE: The outer CV joint cannot be disassembled or repaired, if damage or faulty the drive axle assembly must be replace.

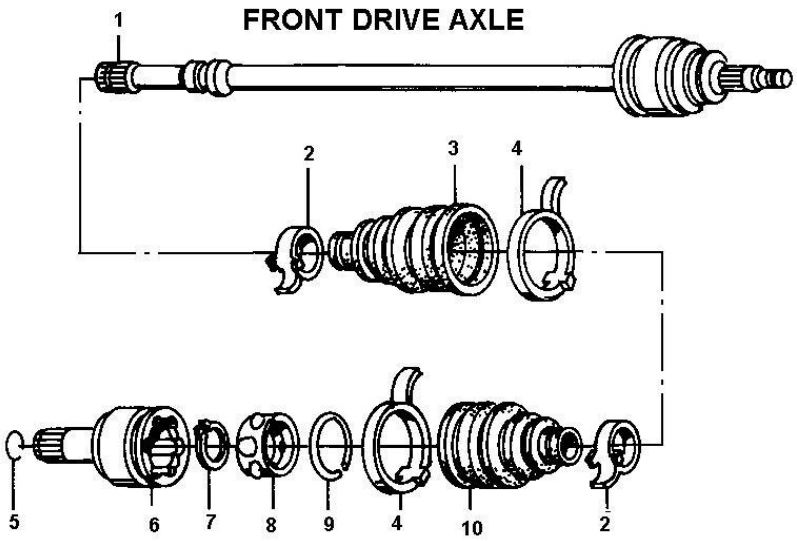

1. Drive Axle/Outer CV Joint Assembly.
2. Boot Band “A”.
3. Outer Board Boot.
4. Boot Band “B”.
5. Stopper Ring
6. Plunging Joint
7. Circlip
8. Bearing
9. Stopper Ring
10. Inboard boot.

NOTE: Always order and replace 6 and 8 together.

REMOVAL

1. Place the vehicle on level ground and set the parking brake, Block the rear wheels so the vehicle will not roll in either direction.
2. Remove the front wheels, steering tie rods, disconnect the A arm on the ball joint end as described in this Chapter and Chapter 4.

CAUTION： To avoid damage to the front gearcase oil seal, hold the front drive shaft horizontal and straight out from the front differential during removal.

3. Hold the drive shaft straight out.
4. Place a tire lever between the inner CV joint and the differential housing, with a small piece of wood against the housing to help get "leverage" and protect the casting. "pop" the in inner CV joint out from the front gearcase.

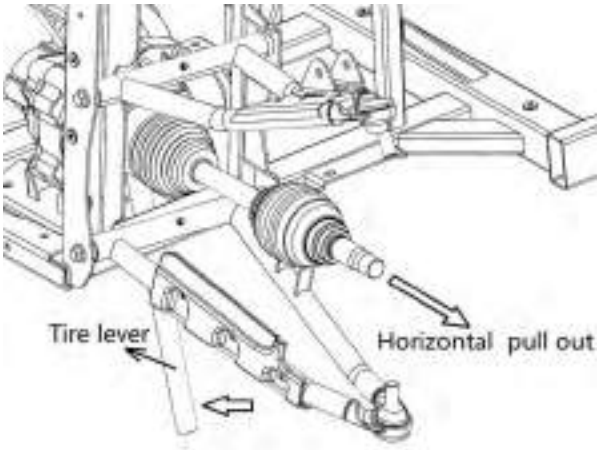

INSPECTION

NOTE: The boots are subjected to a lot of abuse if the vehicle is ridden in rough terrain. If the boots are damage and left un-repaired, the driveshaft joints will fair prematurely by allowing the joint to be exposed to dirt, mud and moisture. This also allow the loss of critical lubrication.

1. Check the rubber boots for wear, cuts or damage and replace if necessary as described under the Disassembly / Assembly procedure in this

chapter.

2. Move each end of the drive shaft in a circular motion (and also a reciprocate for inner one) and check the drive shaft joints for excessive wear or play.
3. This inner CV joint (inboard pivot joint) can be serviced if there is wear or play. The outer CV joint (outboard pivot joint) cannot be serviced if worn or damage and if necessary, the drive shaft assembly must be replaced.

5.7 FRONT DRIVE AXLE INSTALLATION

CAUTION： To avoid damage to the front gearcase oil seal and the strut oil seal, hold the front drive shaft horizontal and straight into the strut during installation.

1. Hold the drive shaft straight in from the front differential.
2. Push the drive shaft straight into the front differential and push it in all the way until it bottoms out. If necessary, carefully tap on the outer end of the drive shaft with a rubber mallet or soft-faced mallet.
3. After the drive shaft is installed, pull the inner CV joint a little to make sure the drive shaft stopper ring has locked into the front differential side gear groove.
4. Carefully install the outer CV joint (spindle) into the strut，install the front hub and wheel.
5. Install the ball joint on the A arm, the steering tie rods, the hubs and the wheels as described in this Chapter and Chapter 4.

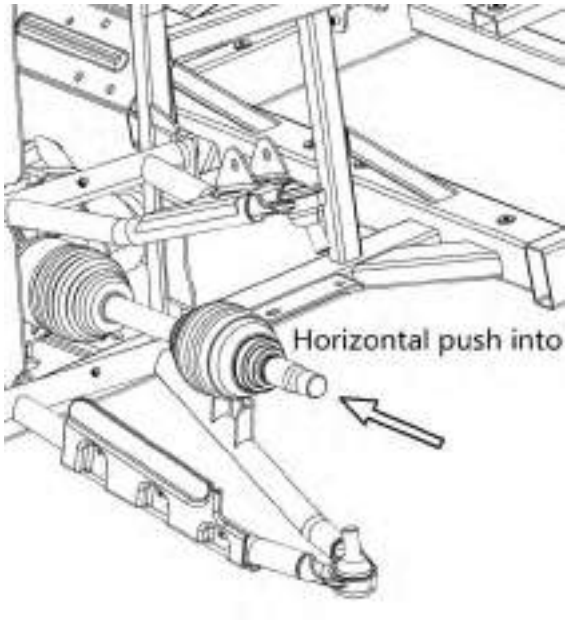

5.8 FRONT DRIVE AXLE DISASSEMBLY/ INSPECTION

INNER CV JOINT DISASSEMBLY

NOTE: The outer CV joint cannot be disassembled or repaired, if damage or faulty the drive axle assembly must be replace.

1. Open the clamps on both boot band ”A” and ”B” on the inner CV joint, then remove boot band ”B”.

Discard the boot band, it cannot be reused.

2. Carefully slide the boot (A) onto the drive axle and off the inboard joint.
3. Wipe out all of the molybdenum disulfide grease within the inboard joint cavity.
4. Remove the stopper ring from the inboard joint.
5. Remove the inner CV joint.
6. Remove the circlip and slide off the bearing assembly. Be careful not to drop any of the steel balls from the bearing cage.
7. Slide the inner CV off the drive axle and discard the boot band ”A”, it cannot be reused.
8. If the outboard boot requires replacement, perform the following:
   a. Open the clamps on both boot bands ”A” and ”B” on the outer CV joint, then remove boot band ”B”. Discard the boot band, it cannot be reused.
   b. Slide the outboard boot off the drive axle and discard the boot band ”A”, it cannot be reused.
9. Inspect the drive axle as described in this chapter.

INNER CV JOINT INSPECTION

1. Clean the bearing assembly in solvent and thoroughly dry.
2. Inspect the steel balls, bearing case and the bearing race for wear or damage.
3. Check for wear or damage to the inner splines of the bearing race.
4. If necessary, disassembly the bearing assembly for further inspection. Carefully remove the steel balls from the bearing cage then remove the bearing race from the bearing cage.
5. If any of the components of the bearing assembly are damaged, replace the entire assembly as no replacement parts are available.
6. Clean the inner CV joint in solvent and thoroughly dry.
7. Inspect the interior of the inboard joint where the steel balls ride. Check for wear or damage and replace the joint if necessary.
8. Inspect the snap ring groove on the inboard joint for wear or damage.

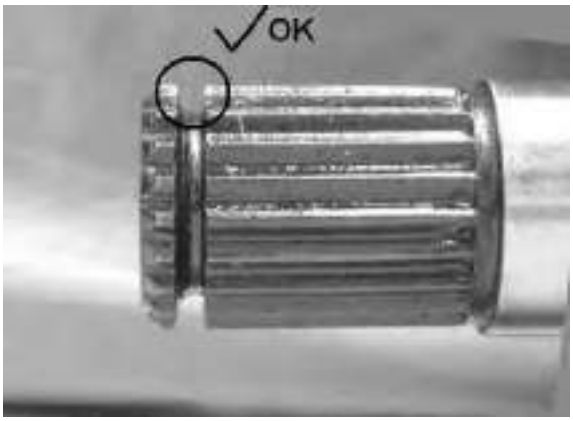

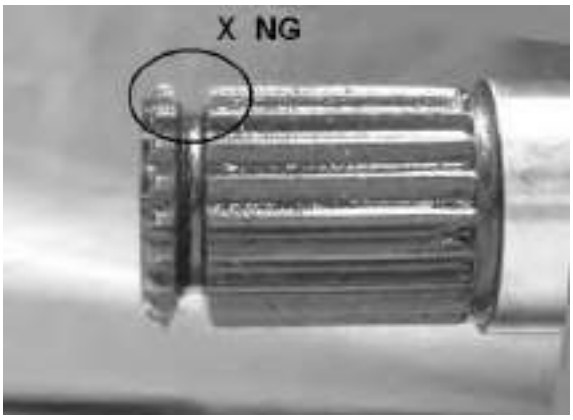

9. Inspect the splines on the inner CV joint for wear or damage.
10. Check the stopper ring in the end of the inboard joint. Make sure it seats in the groove correctly, if damage the ring must be replaced. See right picture.
11. Inspect the exterior of the inner CV joint for cracks or damage, replace if necessary. Check the movement of the joint for excessive play or noise by moving the drive axle in a circular and reciprocate direction.
12. Inspect the drive axle for bending, wear or damage.
13. Inspect the inner end splines, the outer end splines and the front hub cotter pin hole for wear or damage. If any of these areas are worn or damaged, replace the drive axle.

Check the movement of the joint

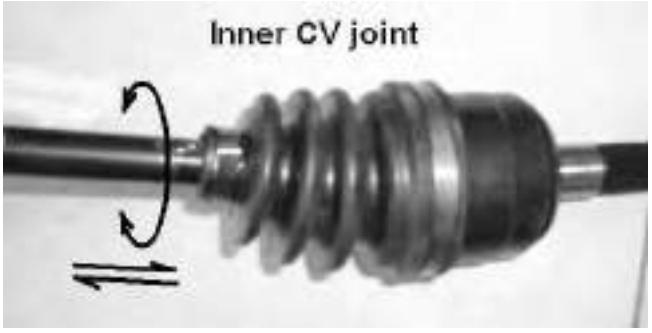

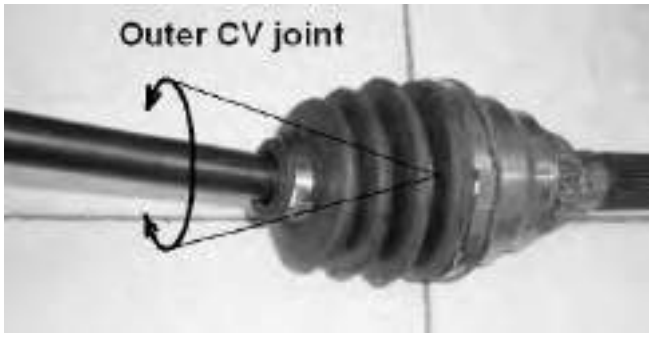

NOTE: Inner CV joint must be replaced with the bearing as an assembly.

5.9 FRONT DRIVE AXLE ASSEMBLY

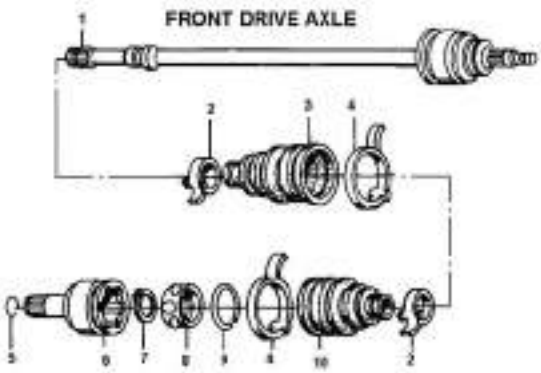

1. The rubber boots are not identical and must be installed on the correct joint. The boots are marked as follows:
   a. Inner CV joint boot : “inner”,
   b. Outer CV joint boot: “outer”.
2. If the outboard boot was removed, install a new boot onto the drive axle at this time.

NOTE: Position the new boot bands with their tabs facing toward the rear of the vehicle.

3. Install two new small boot bands onto the drive axle.
4. Install the inboard boot and move the small boot band onto the boot. Bend down the tab on the boot band and secure the tab with the locking

clips and tap them with a plastic hammer. Make sure they are locked in place.

5. If the bearing assembly was disassembled, assemble the bearing as follows:
   a. Position the bearing race and install the race into the bearing case. Align the steel ball receptacles in both parts.
   b. Install the steel balls into their receptacles in the bearing case.
   c. Pack the bearing assembly with molybdenum disulfide grease. This will help hold the steel balls in place.
6. Position the bearing assembly with the small end of the bearing going on first and install the bearing onto the drive axle.
7. Push the bearing assembly on until it stops, then install the circlip, Make sure the circlip seats correctly in the drive axle groove.
8. Apply a liberal amount of molybdenum disulfide grease to the bearing assembly. Work the grease in between the balls, the race and the case. Make sure all voids are filled with grease.
9. Apply a liberal amount of molybdenum disulfide grease to the inner surfaces of the inboard joint.
10. Install the inboard joint over the bearing assembly and install the stopper ring. Make sure it is seated correctly in the inboard joint groove.
11. After the stopper ring is in place, fill the inboard joint cavity behind the bearing assembly with additional molybdenum disulfide grease.
12. Pack each boot with the following amounts of molybdenum disulfide grease:
    a. Inboard boot:35-55grams(1.2-1.9oz.).
    b. Outboard boot:30-50grams(1.1-1.8oz.).
13. Move the inboard boot onto the inner CV joint.
14. Move the inboard joint on the drive axle.

NOTE: Position the new boot bands with their tabs facing toward the rear of the vehicle .

14. Move the small boot band onto the boot. Bend down the tab on the boot band and secure the tab with the locking clips and tap them with a plastic hammer. Make sure they are locked in place.
15. Install the large boot bands onto each boot.

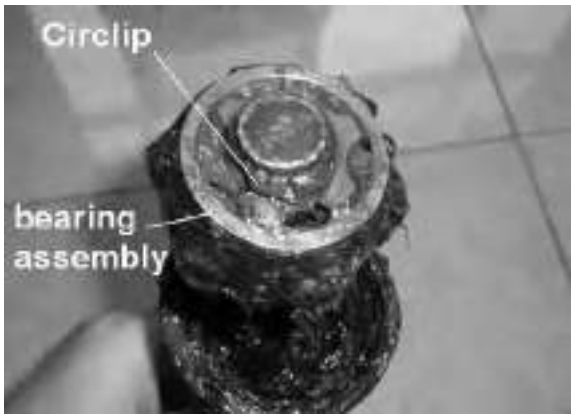

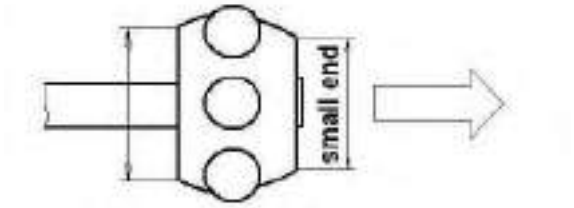

CAUTION: It is critical to avoid undue stress on the rubber boots after the drive axle is installed and the vehicle is run. Don't twist the boot, and always set the both ends in designed position.

16. Secure all large boot bands. Bend down the tab on the boot band and secure the tab with the locking clip and tap them with a plastic hammer. Make sure they are locked in place.
17. If removed, install the stopper ring and make sure it is seated correctly in the drive axle groove.
18. Apply molybdenum disulfide grease to the end splines.

5.10 REAR HUB EXPLODED VIEW

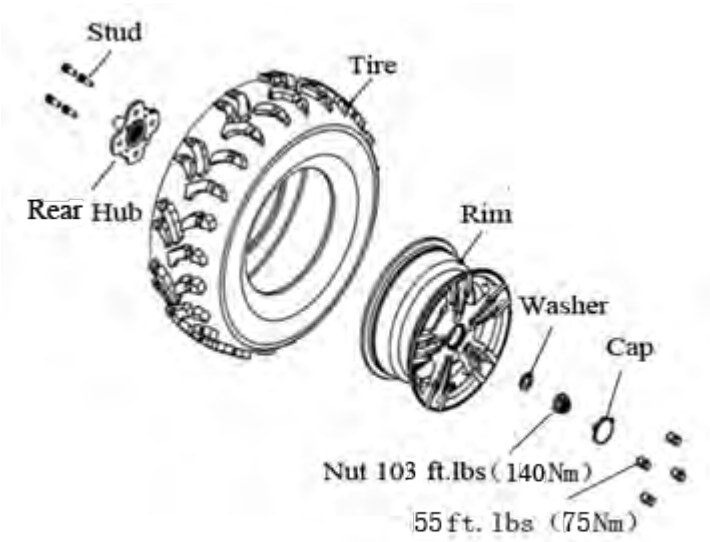

5.11 REAR HUB AND KNUCKLE REMOVAL/INSPECTION

1. Elevate rear end and safely support machine under main frame area.

CAUTION: Serious injury may result if machine tips or falls. Be sure machine is secure before beginning this service procedure. Wear eye protection when removing bearings and seals.

2. Check bearings for side play by grasping the tire/Wheel firmly and checking for movement. Grasp the top and bottom of the tire. The tire should rotate smoothly without binding or rough spots.
3. Remove wheel nuts and wheel.

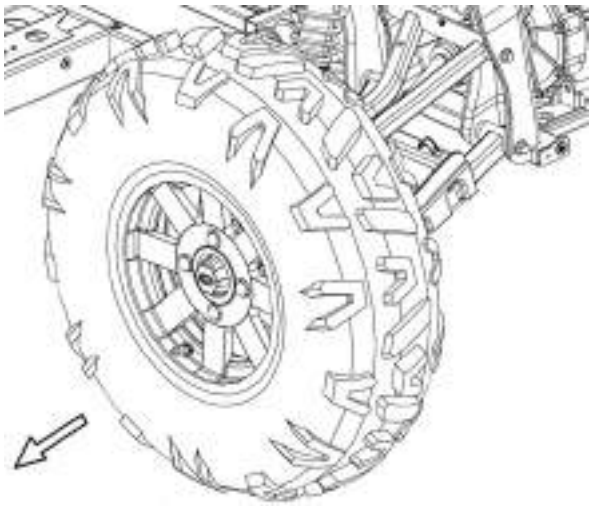

4. Remove rear spindle nut, and washer.
5. Remove the upper and lower control arm bolts.
6. Slide the rear hub and knuckle from the rear drive shaft.

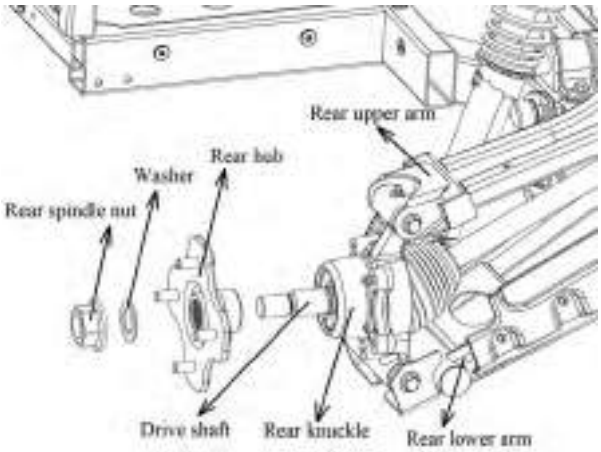

7. Inspect the rear hub and knuckle assembly by hand for smoothness and side to side movement, replace as needed.

5.12 REAR HUB AND KNUCKLE INSTALLATION

1. Start the rear hub and knuckle assembly onto the drive shaft.

2. Align the bottom of knuckle and lower control arm. Secure with the lower control arm bolt.

3. With the driveshaft placed in the knuckle, align the knuckle with the top control arm. Secure with the upper control arm bolt.

4. Torque the top and bottom A-arm bolts as shown in the picture.

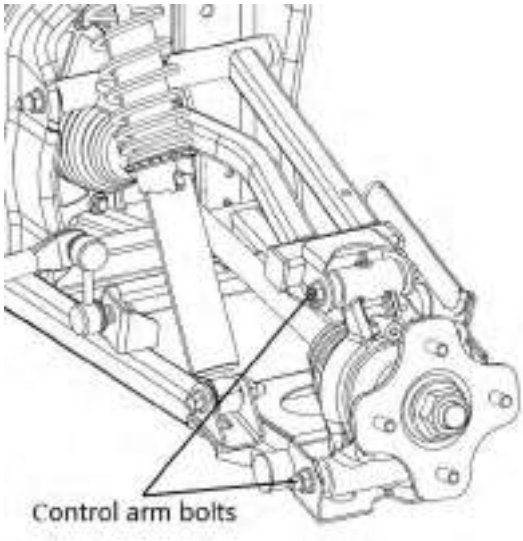

5. Install the washer and the new spindle nut.

6. Lower the vehicle. Torque the spindle nut to 103 ft.lbs. (140 Nm).

7. Knock on the edge of the spindle nut, so that it can be clamped into the limit slot.

8. Install the wheel and wheel nuts. Torque wheel nuts to 55 ft.lbs. (75 Nm).

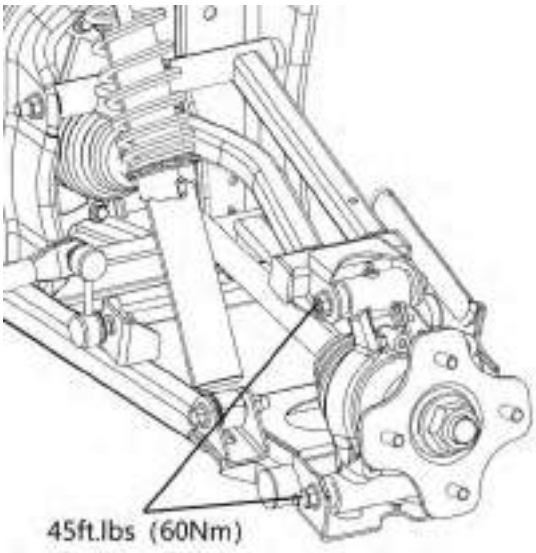

5.13 REAR DRIVE SHAFT REMOVAL

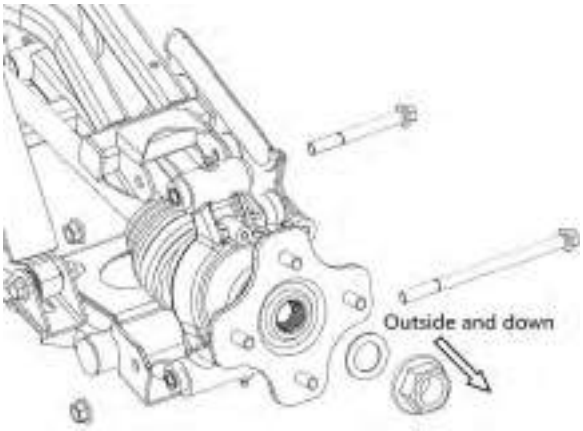

1. Repeat of the steps in the “REAR HUB AND KNUCKLE REMOVAL” section.

2. Slide the rear drive axle out of the knuckle by pulling the hub and knuckle assembly outward and down.

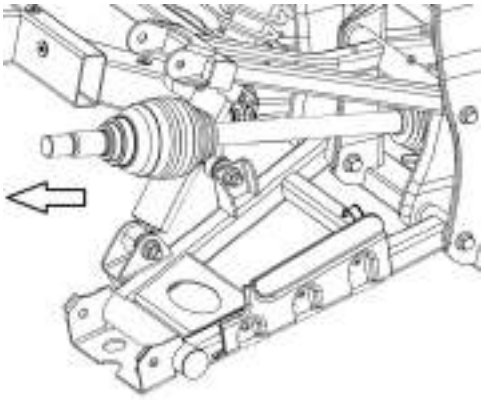

3. Pull the rear drive axle straight out of the frame. Use short sharp jerks to free the circlip from the gearcase. The circlip holds the axle in the gearcase.

4. Inspect the axle splines and CV boots for any damage.

5.14 REAR DRIVE SHAFT INSTALLATION

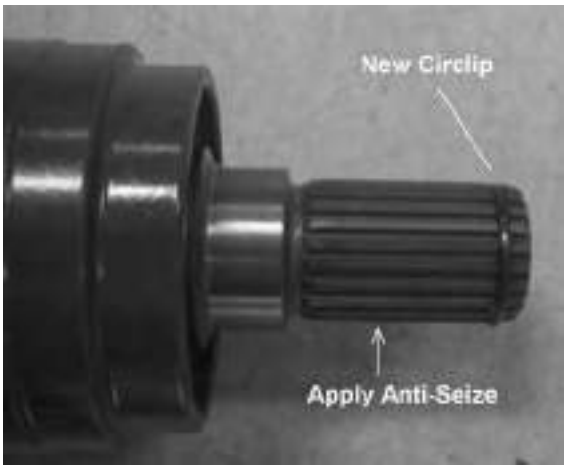

1. Install a new circlip onto the rear drive shaft. Apply Anti-Seize Compound onto the rear driveshaft splines (both ends).

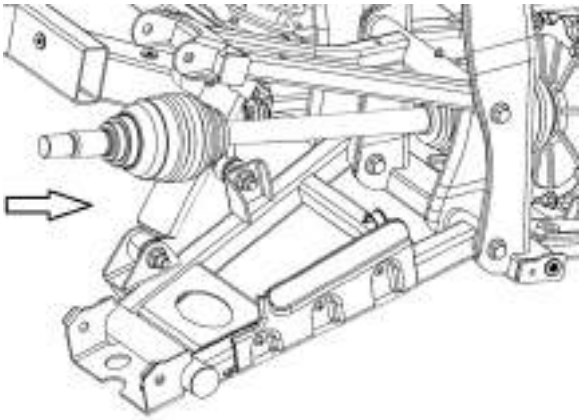

2. Reinstall the rear driveshaft into the rear gearcase. Be sure the circlip is securely fit into the rear gearcase. Use a rubber mallet to tap on the outboard end of the driveshaft if necessary.

3. Slide the rear drive axle into the knuckle.

4. Lift knuckle into place and install bolt to upper and lower control arm. Torque bolt to 45 ft.lbs (60 Nm).

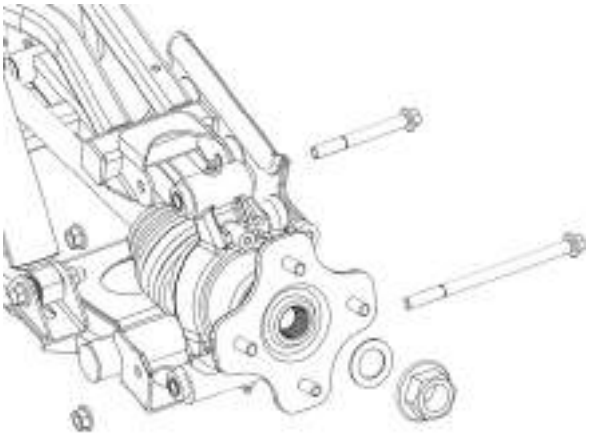

5. Install the washer and the new spindle nut.

6. Lower the vehicle. Torque the spindle retaining nut to 103 ft.lbs. (140 Nm).

7. Knock on the edge of the spindle nut, so that it can be clamped into the limit slot.

8. Install the wheel and wheel nuts. Torque wheel nuts to 55ft.lbs. (75 Nm).

5.15 REAR GEARCASE EXPLODED VIEW

REAR GEARCASE EXPLODED VIEW

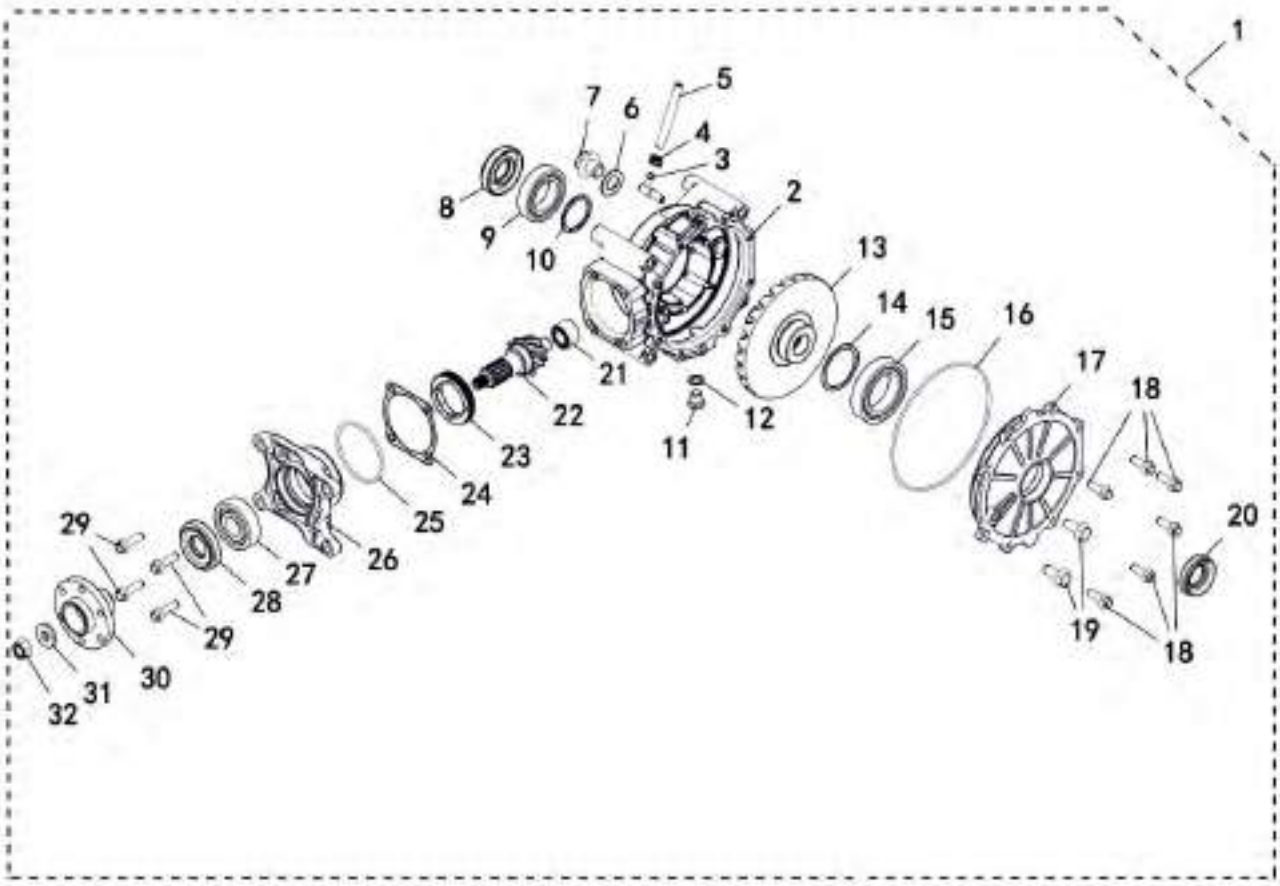

1	REAR AXLE ASSEMBLY	1	**25**	O-RING 69×3	AR
2	REAR GEAR CASE	1	**26**	BEVEL GEAR BEARING HOUSING	1
3	VENT NOZZLE	1	**27**	BEARING 6305	1
4	CLAMPS	1	**28**	OIL SEAL Φ35×Φ61×9	1
5	VENT PIPE	1	**29**	BOLT M8×30	1
6	WASHER 18	1	**30**	COUPLER, REAR AXLE	4
7	BOLT M18x1.5	1	**31**	WASHER 12.5×30×4	1
8	OIL SEAL30x60x15	1	**32**	NUT M12×1.25	1
9	BEARING 6008	1			
10	ADJUST SHIM48x40.3	AR			
11	HEXAGON HEAD BOLT	1			
12	WASHER	1			
13	DRIVEN BEVEL GEAR ASSEMBLY	1			
14	ADJUST SHIM60.5x50.3	AR			
15	BEARING 6010	1			
16	O-RING 151×3	1			
17	REAR GEAR BEARING HOUSING	1			
18	BOLT M8×25	6			
19	BOLT M10x25	2			
20	OIL SEAL 30x50x13.5	1			
21	NEEDLE BEARING	1			
22	DRIVE BEVEL GEAR ASSEMBLY	1			
23	BEARING RETAINERM64x1.5x10	1			
24	ADJUST SHIM	1			

5.16 REAR GEARCASE DISASSEMBLY

Important: Before staring any operation On the gearbox， make sure that never clean the gearbox with a high pressure water jet**.**

1. Remove the oil drain plug **A** and let the oil drain from the gearbox**.**

Important: Clean the plug carefully**.**

Replace the sealing washer **B** before it's assembled**.** →Fig 1

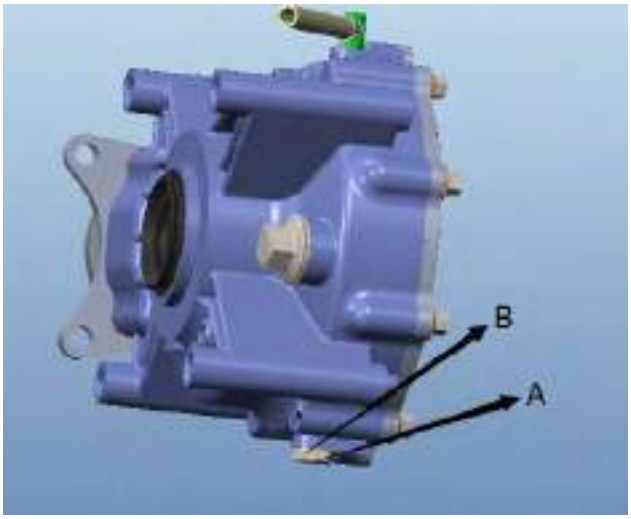

Fig 1

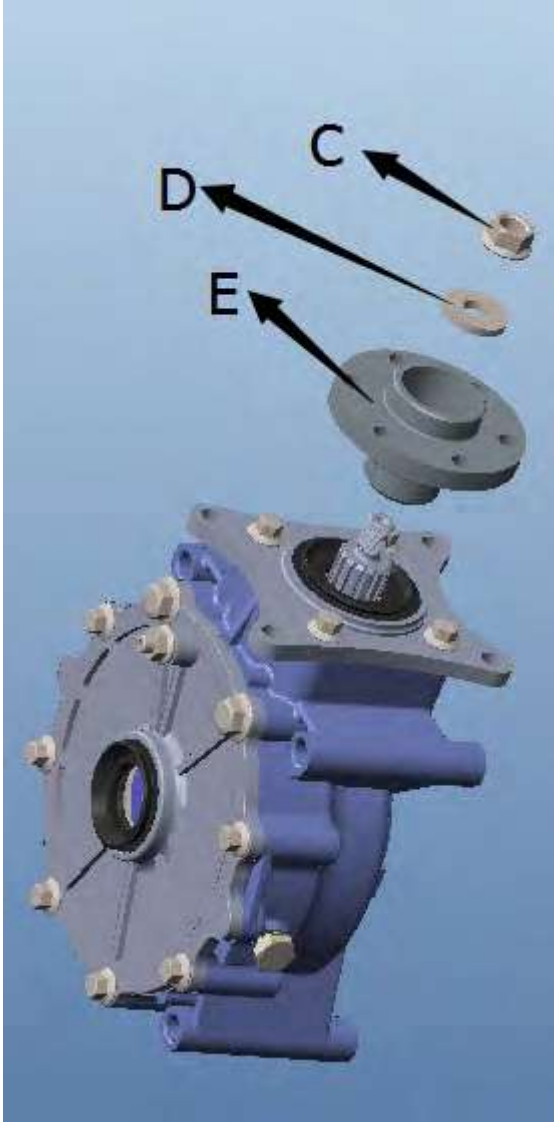

Fig 2

2. Remove the four bolts M8×35 **F** ， the drive bevel gear assembly **G** and the adjust shim **H.** →Fig 3

3. Remove the nut M12×1.25 **C**， the washer 12.5×30×4 **D** and the coupler of the rear axle **E.**
→Fig 2

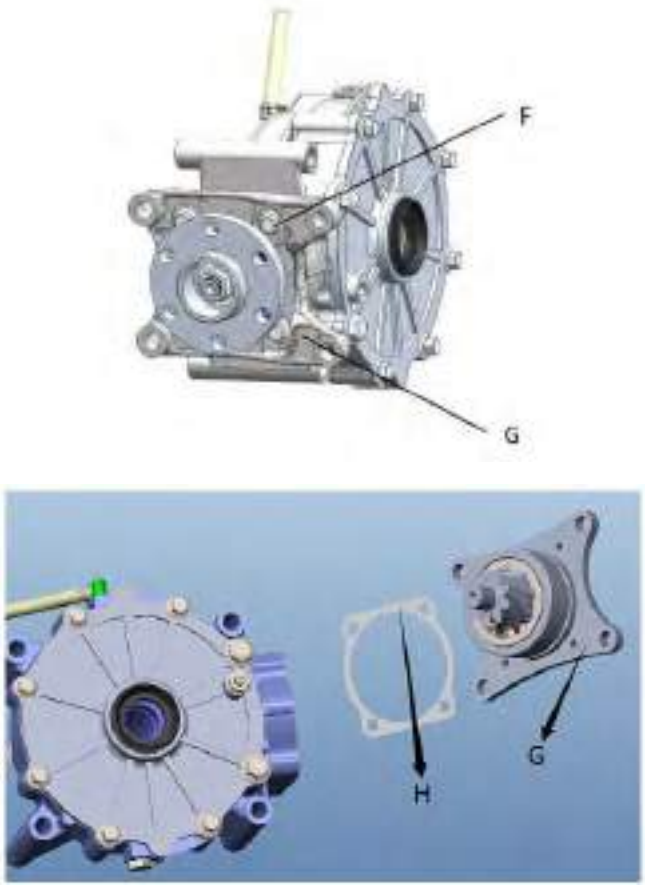

Fig 3

1. Remove the bevel gear-driving Ⅰ, the adjust shim **J** and the O-ring **K.**
Remove the bearing retainer **L** with the special tool**.**
Remove the bearing **M** and the oil seal **P** from the bevel gear bearing housing **N.**
→Fig 4

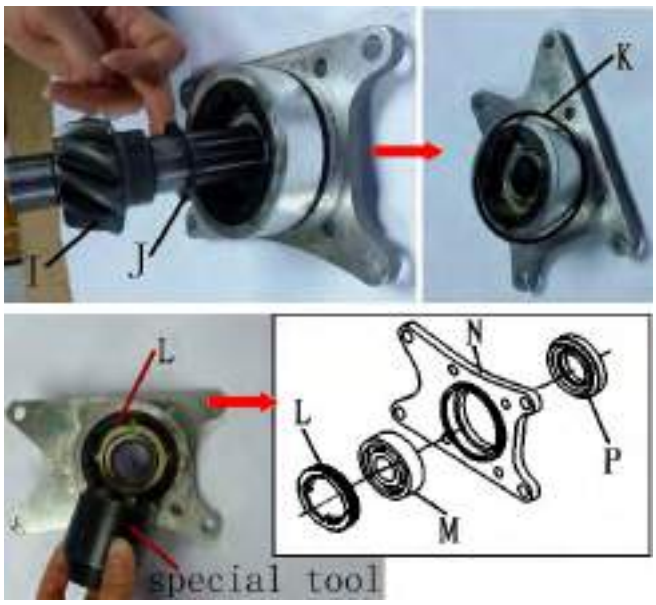

Fig 4

2. Remove the six bolts M8×25 **Q** and the two bolts M10×1.25×25 **R.**
Remove the ring gear bearing housing **T** from the rear gear case **S.**
→Fig 5

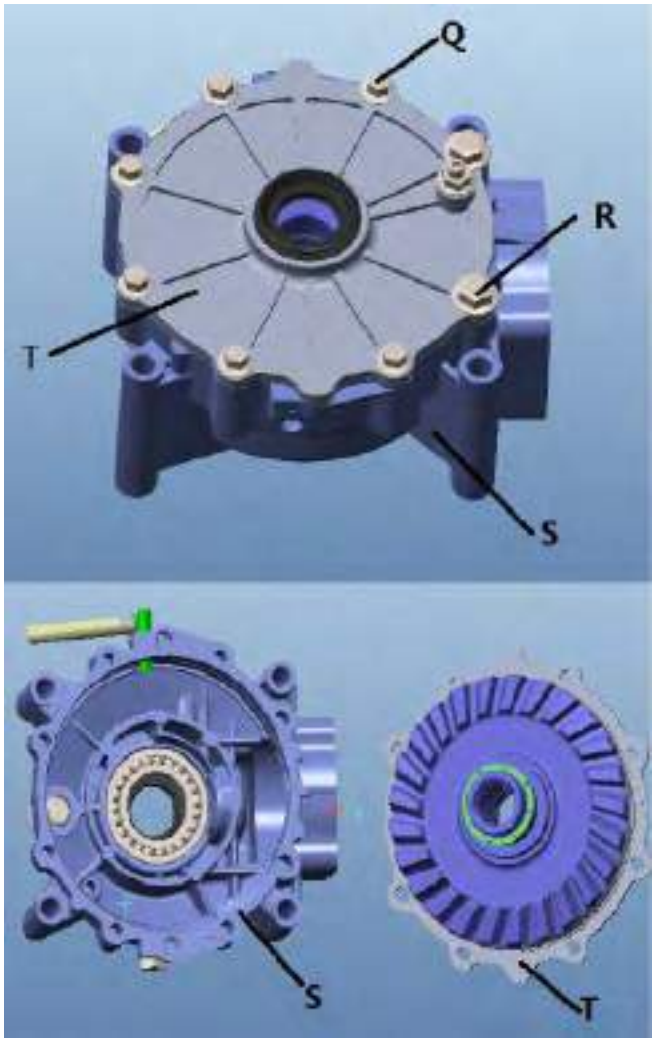

Fig 5

3. Remove the oil seal 65×90×9 **U** from the rear gear case **S.**
Remove the needle bearing **V** from the rear gear case **S.**
→Fig 6

Fig 6

4. Remove the adjust shim **W** from the bevel gear comp.-driven **X.**
   Remove the bevel gear comp.-driven **X** from the ring gear bearing housing **T.**
   Remove the adjust shim **Y** from the bevel gear comp.-driven **X.**
   →Fig 7

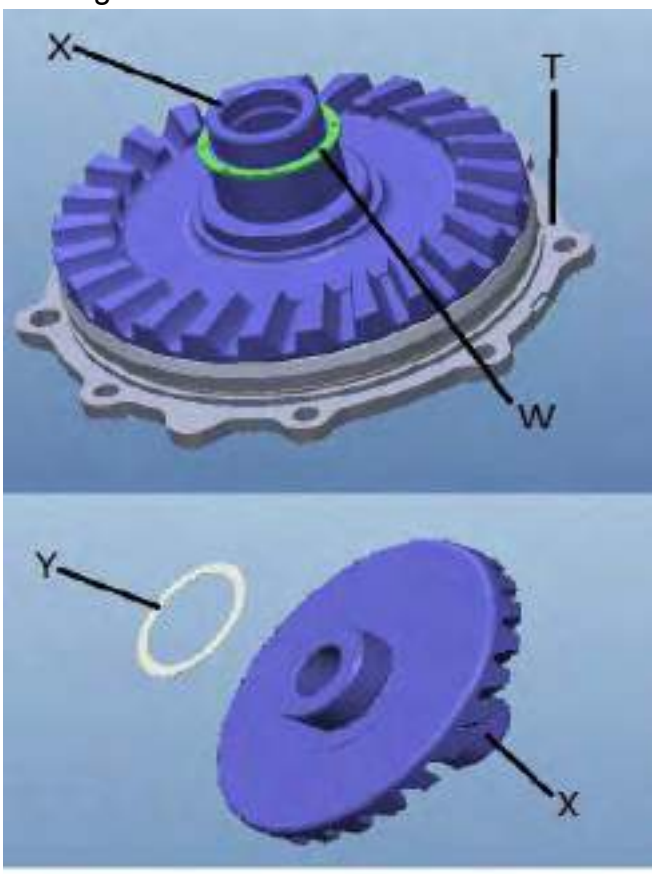

Fig 7

5. Remove the O-ring **Z**，the oil seal 65×90×9 **a** and the bearing **b** from the ring gear bearing housing **T.**
   →Fig 8

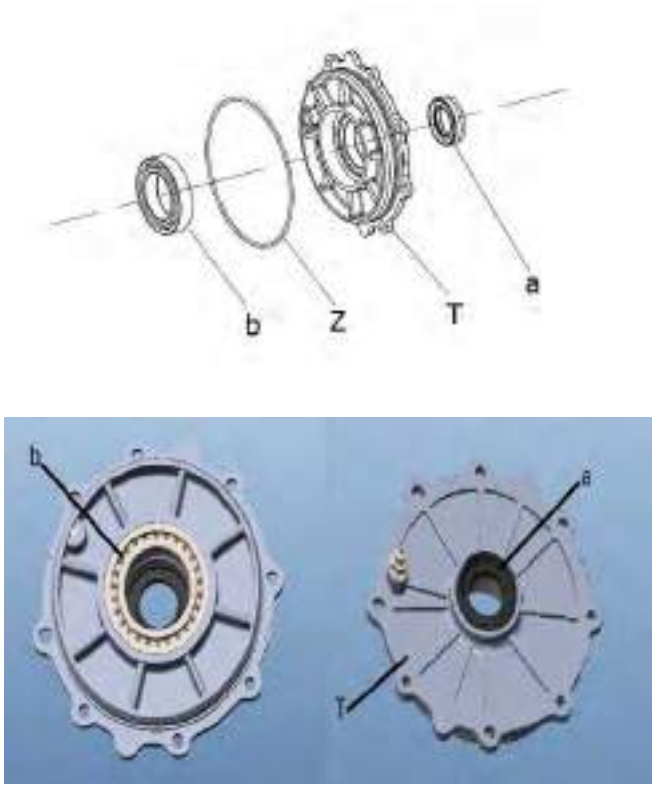

Fig 8

5.17 REAR GEAR CASE ASSEMBLY

Important: Before staring any operation on the gearbox，to ensure that the surface of all parts is clean**.**

1. Mount the bearing **A** in the ring gear bearing housing **C.**
   Mount the O-ring **B** into the groove of the ring gear bearing housing **C.**
   →Fig 1

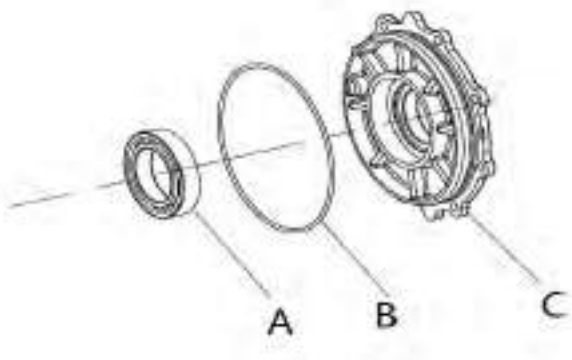

pr

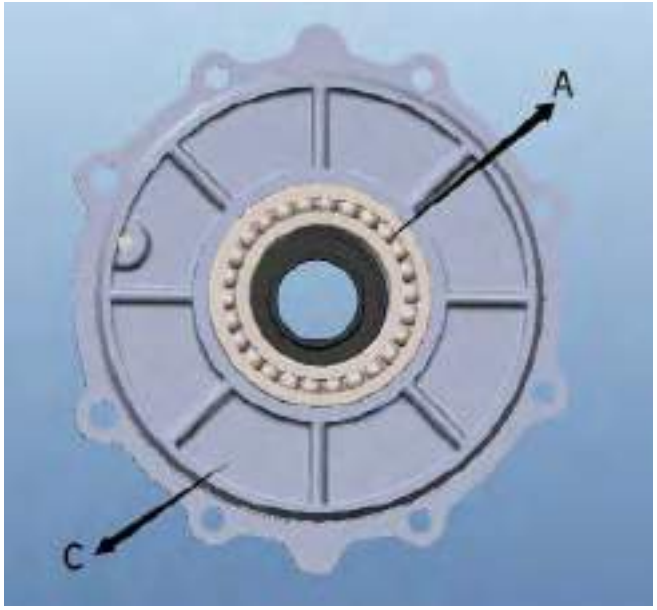

Fig 1

2. Mount the adjust shim **D** in the shaft neck of the bevel gear comp.-driven **E.**

Mount the bevel gear comp.-driven **E** in the bore of bearing **A.**

Mount the adjust shim **F** in the other neck of the bevel gear comp.-driven **E.**

→Fig 2

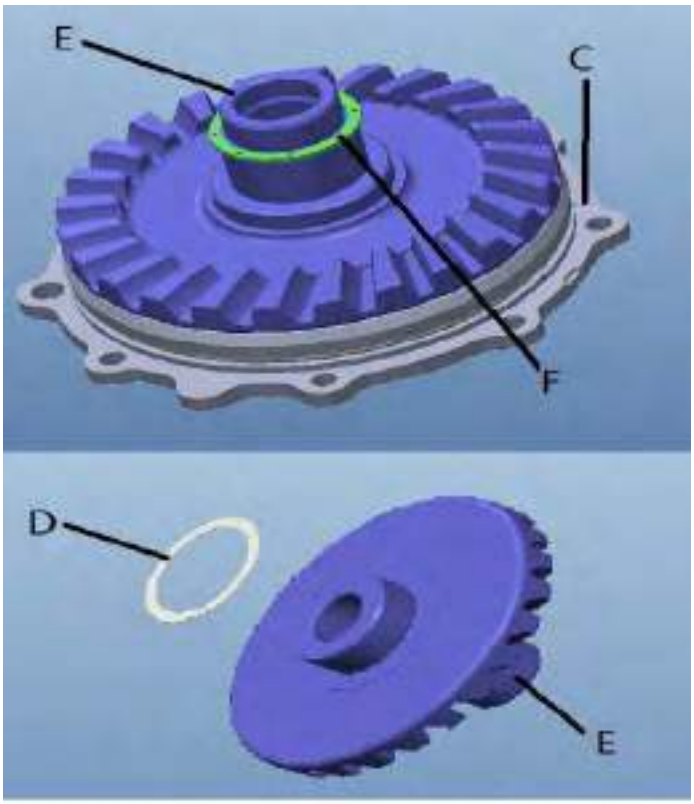

Fig 2

3. Mount the needle bearing **H** and the needle bearing Ⅰ into the suited hole of the rear gear case **G.**

→Fig 3

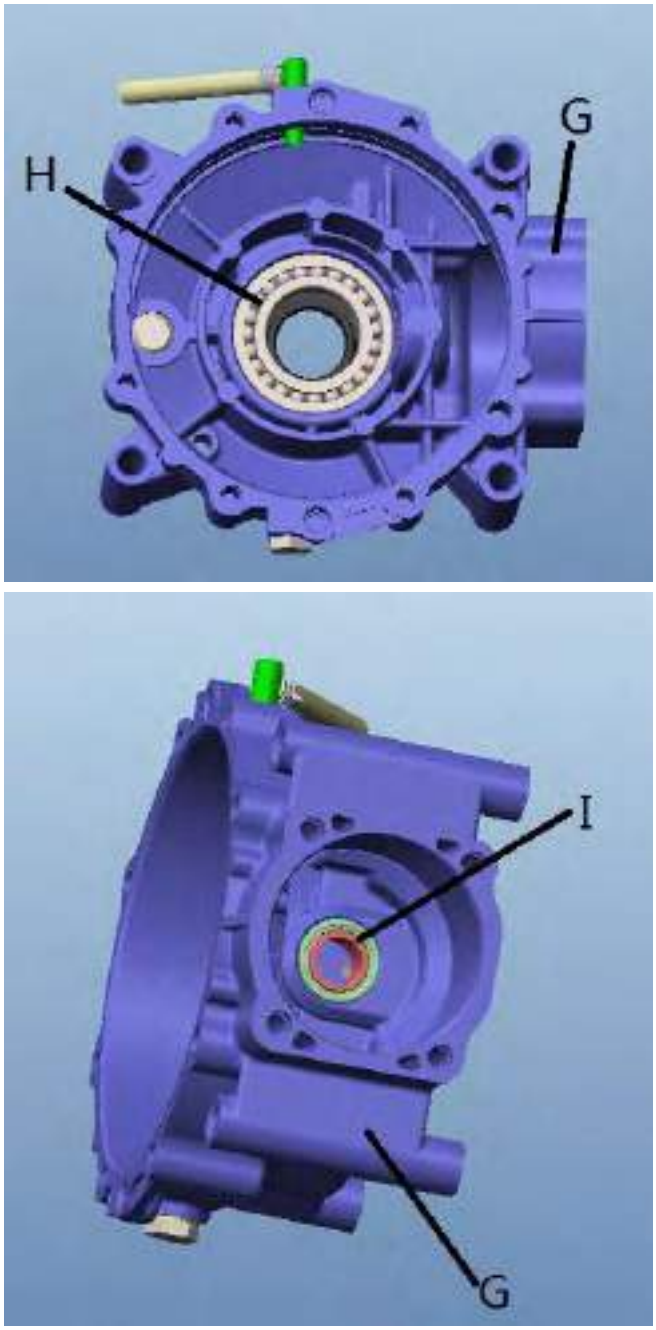

Fig 3

4. Apply some Loctite 510 silicone sealant on the screw thread**.** Mount the drain plug M14×1.25×12 **L** with the washer **M,** tight securely (35~40N.m)**.**

→Fig 4

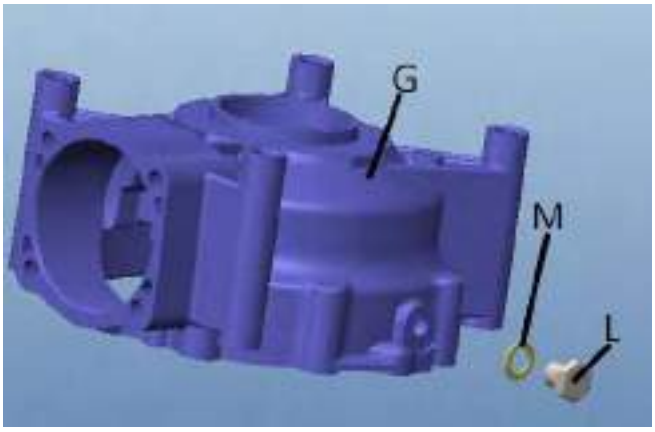

Fig 4

5. Apply some Loctite 510 silicone sealant on the shaft neck of pipe joint **N** for the installation.
   Mount the pipe joint **N** on the suited hole of the rear gear case **G.**
   →Fig 5

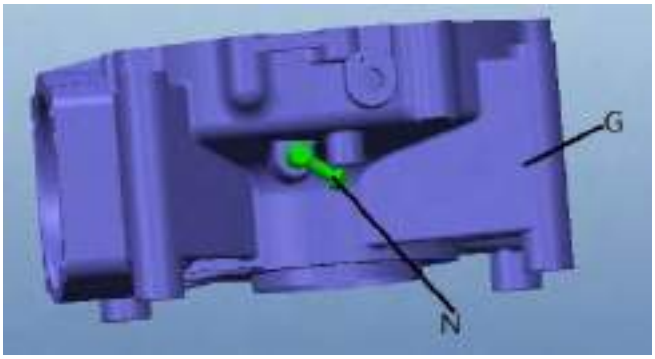

Fig 5

6. Mount the shaft neck of the bevel gear comp.-driven **E** in the suited hole of the needle bearing **H.**
   Make the ring gear bearing housing **C** and the rear gear case **G** together
   →Fig 6

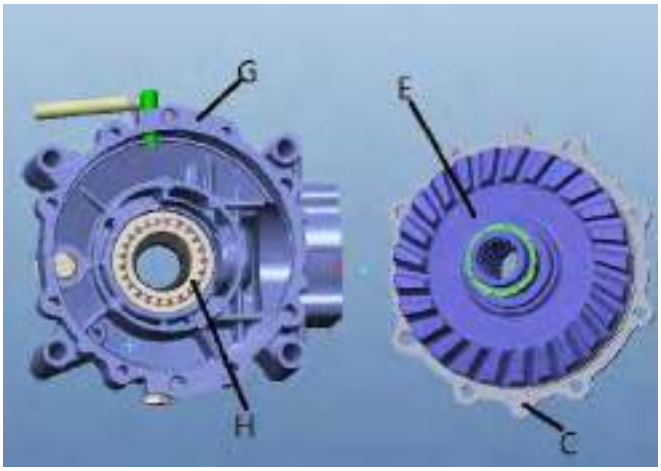

Fig 6

7. Tighten the six bolts M8×25 **Q** to a torque of 20~25N.m.
   Tighten the two bolts M10×1.25×25 **P** to a torque of 35~40N.m.
8. Mount the axle sleeve **U** of the inner & outer race in the neck of the bevel gear-driving **V.**
   →Fig 8

Fig 8

9. Mount the bearing **W** into the suited hole of the bevel gear bearing housing **Z.**
   Mount the bearing retainer **X** in the bevel gear bearing housing **Z** with the special tool, tight securely (90~100N.m).
   Mount the O-ring **a** into the groove of the ring gear bearing housing **Z.**
   Mount the oil seal **Y** into the suited hole of the bevel gear bearing housing **Z.**
   →Fig 9

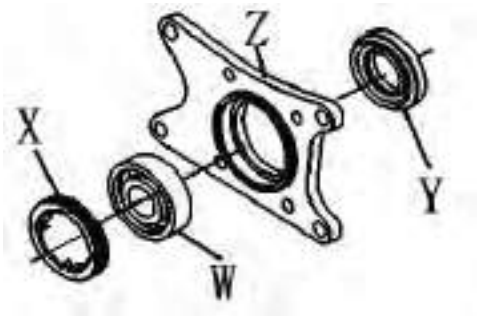

Fig 9

10. Mount the adjust shim **b** in the shaft neck of the bevel gear-driving **V.**
Mount the bevel gear-driving **V** into the hole of the bearing **W.**
→Fig 10

Fig 10

11. Mount the adjust shim **d** in the shaft neck of the bevel gear bearing housing **Z.**
Make the rear gear case **G** and the bevel gear bearing housing **Z** together**.**
→Fig 11

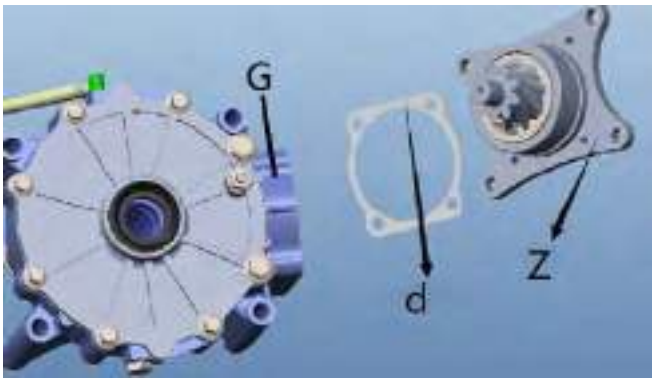

Fig 11

12. Apply some Loctite 242 threadlocker on screw thread**.**
Tighten the four bolts M8×35 **e** to a torque of 20~25N.m**.**
→Fig 12

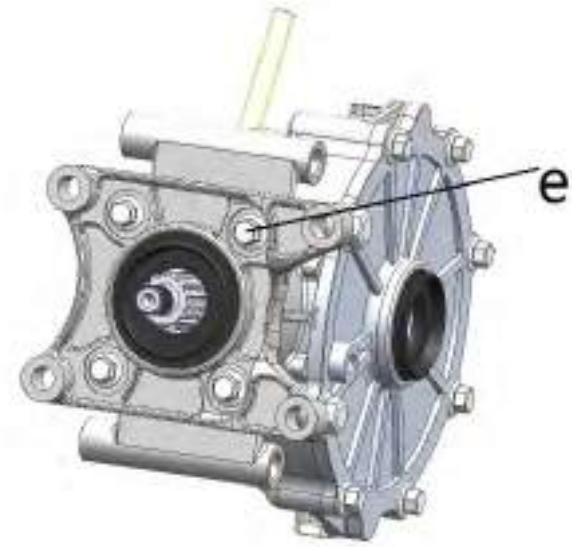

Fig 12

13. Mount the coupler of the rear axle **f** with the bevel gear-driving **V.**
Mount the washer 12.5×30×4 **g.**
Apply some Loctite 242 threadlocker on screw thread**.**
Tighten the nut M12×1.25 **h** to a torque of 50~60N.m**.**
→Fig 13

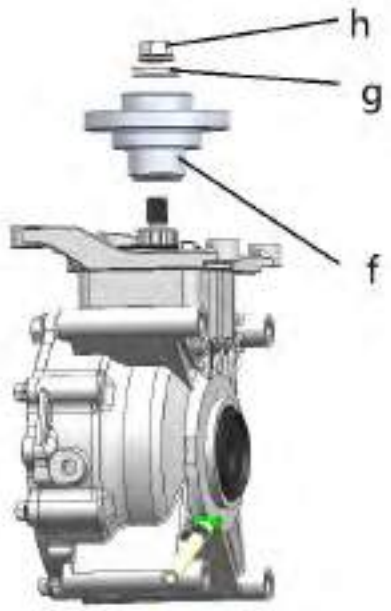

Fig 13

14. Mount the oil seal 65×90×9 **j** in the ring gear bearing housing **C** on the right**.**
→Fig 14

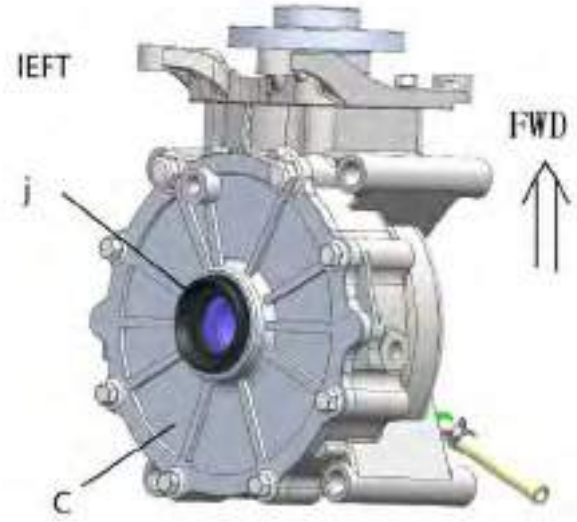

Fig 14

15. Mount the oil seal **k** in the ring gear bearing housing **G** on the left**.**
Make the O-ring **m** on the fill plug **n .**
Tighten the fill plug **n** to a torque of 35~40N.m**.**
→Fig 15

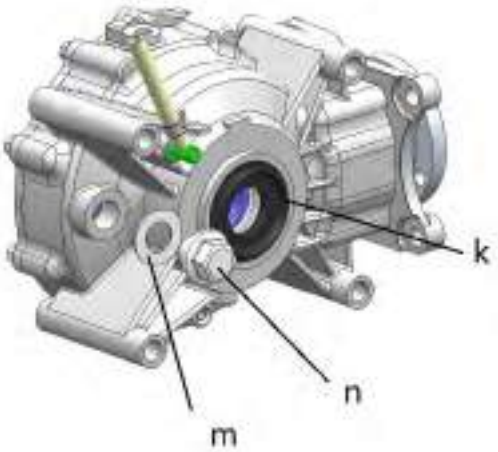

Fig 15

5.18 FRONT GEARCASE EXPLODED VIEW

FRONT GEARCASE EXPLODED VIEW

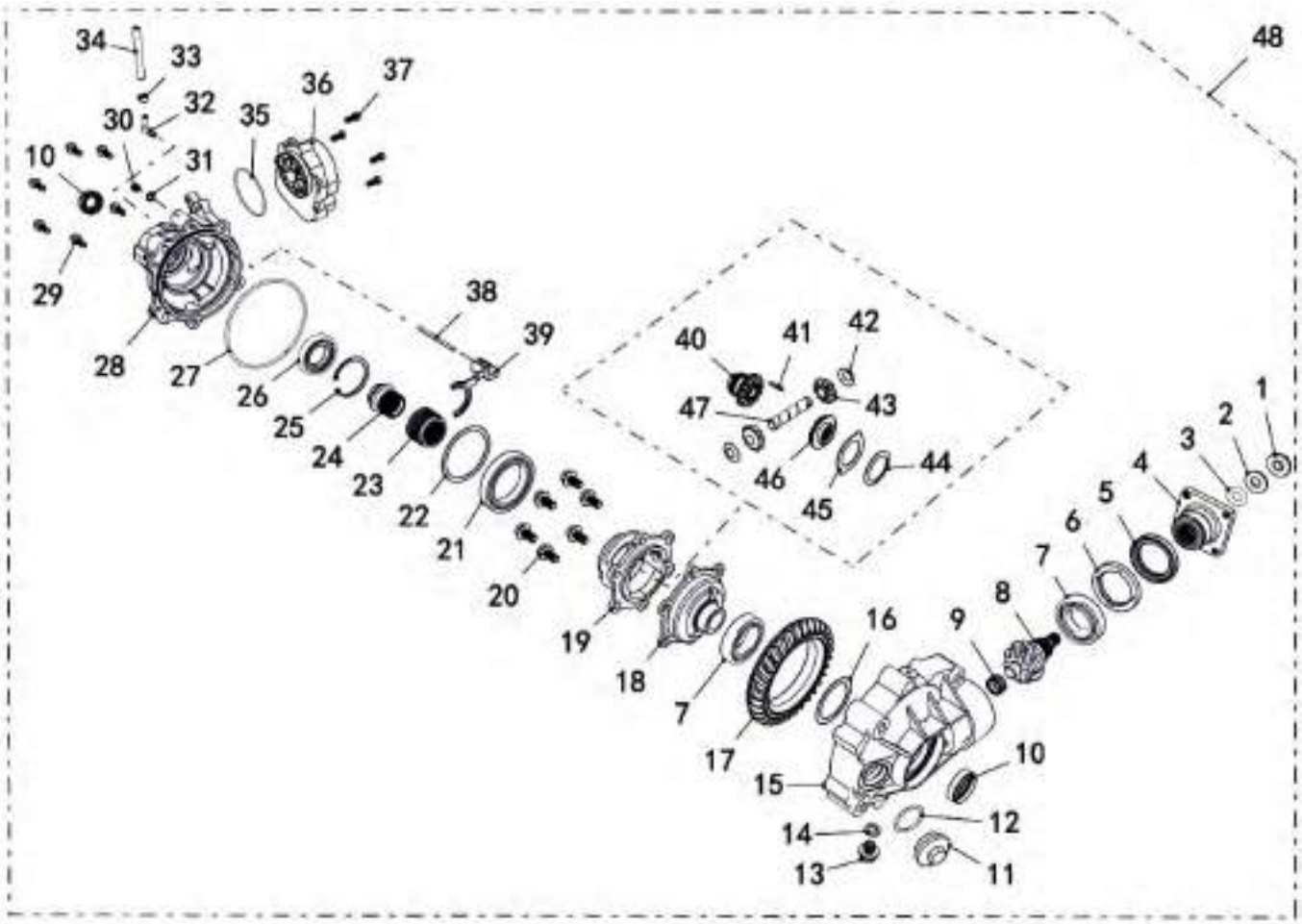

1	Nut, Front Output Shaft	1	**26**	Bearing 16007	1
2	Washer, Front Output Shaft Nut	1	**27**	O-Ring 141×2.4	1
3	O-Ring	1	**28**	Gear Case, Front Axle	1
4	Coupler, Front Axle	1	**29**	Bolt M8×25	6
5	Oil Seal 48×65×9	1	**30**	Screw M8×8	1
6	Bearing Retainer	1	**31**	Washer 8	1
7	Bearing 6007	2	**32**	Vent Nozzle	1
8	Bevel Gear -Driving	1	**33**	Clip	1
9	Needle Bearing	1	**34**	Vent Pipe	1
10	Oil Seal 24×38×8	2	**35**	O-Ring 81.2×1.9	1
11	Fill Plug	1	**36**	Gear Motor	1
12	O-Ring 30.5×3	1	**37**	Screw M8×20	4
13	Drain Bolt	1	**38**	Pin Shaft	1
14	Washer 10	1	**39**	Shift Fork	1
15	Front Axle Box Cover	1	**40**	Drive Gear	1
16	Adjusting Shim(61×48)	as needed	**41**	Pin 5×25	1
17	Bevel Gear -Driven	1	**42**	Wearing Ring	2
18	Top Bracket,Differential Gear	1	**43**	Gear(Center), Differential	2
19	Bracket,Differential	1	**44**	Washer	1
20	Bolt M10×1.25×20	6	**45**	Shim	1
21	Bearing 61912	1	**46**	Driven Gear	1
22	Adjusting Shim(83×71)	as needed	**47**	Gear Shaft	1
23	Drive Clutch	1	**48**	Front Axle	1
24	Drive Clutch Cover	1	**49**		
25	Circlip 62	1	**50**		

5.19 FRONT GEARCASE DISASSEMBLY

Important: Before staring any operation
On the gearbox make sure GEAR MOTOR (*NO.36*) is protected (if mounted). Never clean the gearbox with a high pressure water jet.
→Fig 0.

Fig 0

1. Remove the DRAIN BOLT (*NO.13*) and let the oil drain from the gearbox.

Important: Clean the plug carefully and Replace WASHER 10 (*NO.14*) before Its assembled. →Fig 1.

Fig 1

2. Remove the NUT (NO.1) and the washer (NO.2).
→Fig 2
.

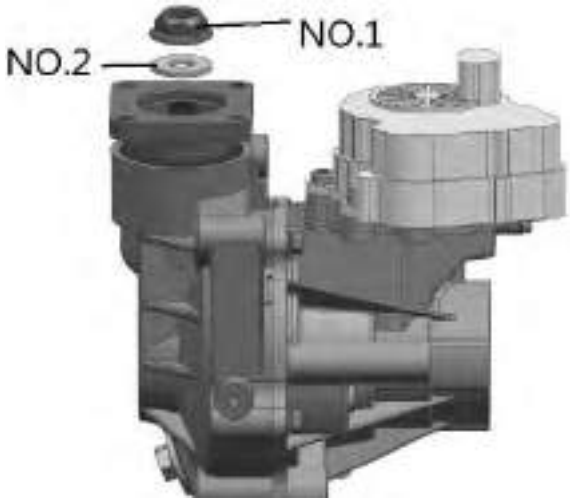

Fig 2

3. Remove the O-RING (*NO.3*) .
→Fig 3.

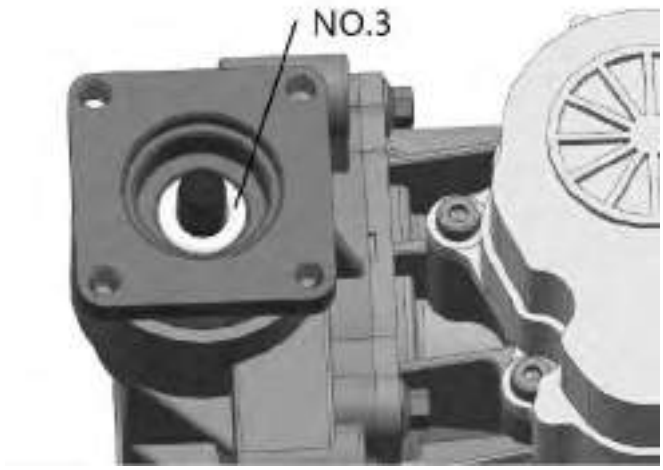

Fig 3

4. Remove the COUPLER (*NO.4*).
→Fig 4.

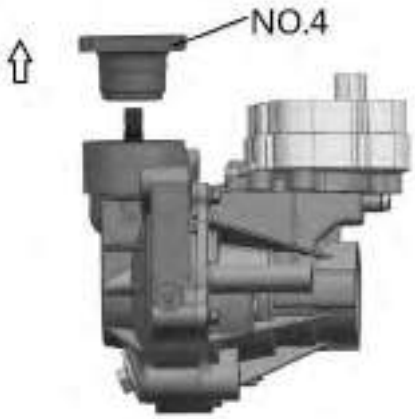

Fig 4

5. Remove the OIL SEAL (NO.5) and repalce with a new seal.
→Fig 5.

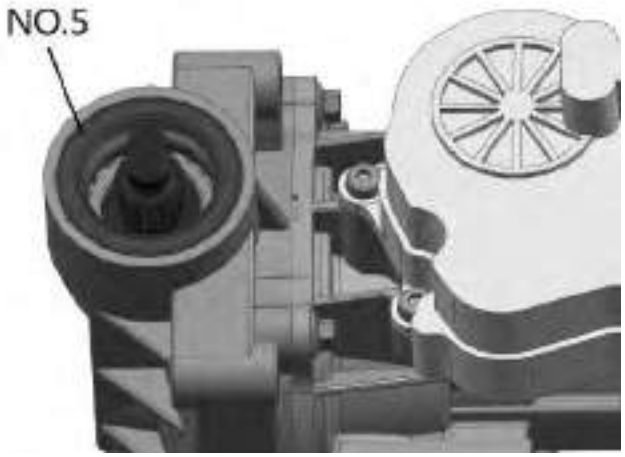

Fig 5

6. Remove the four SCREW (*NO.37*).
→Fig 6.

Fig 6

7. Remove the GEAR MOTOR (*NO.36*).
→Fig 7.

Fig 7

8. Remove the six bolts M8 X L28 （NO.29）**.**
→Fig 8.

Fig 8

9. Remove the GEAR CASE ASSY, FRONT AXLE (NO.28) and CASE COVER ASSY, FRONT AXLE (NO.15) .
→Fig 9.

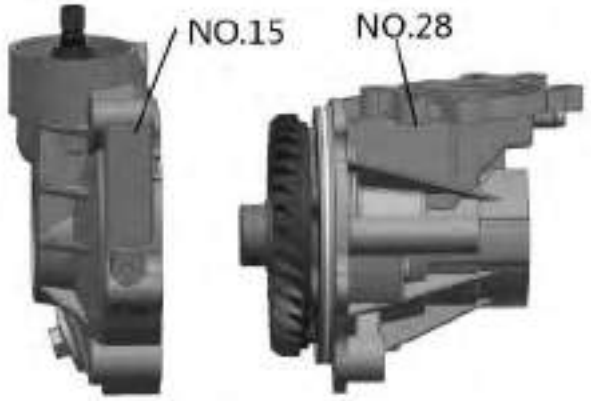

Fig 9

Fig 11

10. Remove the DIFFERENTIAL GEAR ASSY **A** from the housing.
→Fig 10

Fig 10

11. Inspect the bevel gear for chipped, worn or broken teeth.

NOTE: The DIFFERENTIAL GEAR ASSY (A) is NOT intended to be disassembled , as it requires special tooling in order to properly reassemble. If there is any damage to the gear, bearings or others, the assembly must be repalced.

→Fig 11

12. Remove the shims from the differential assembly. Be sure to keep the shims together for reassembly.
→Fig 12.

Fig 12

12. Remove the SCREW (*NO.30*) and the WASHER (*NO.31*).
→Fig 13.

Fig 13

13. Remove the PIN SHAFT (*NO.38*), SHIFT FORK (*NO.39*).
→Fig 14

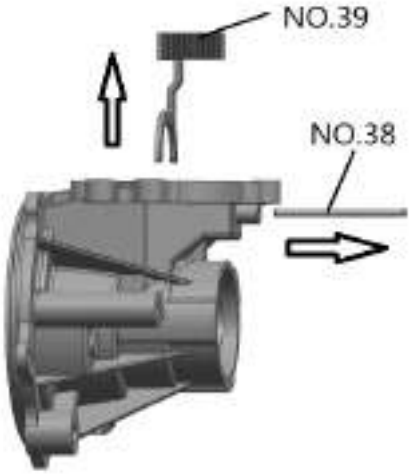

Fig 14

14. Remove the DRIVE CLUTCH (*NO.23*).
→Fig 15.

Fig 15

15. Inspect the bearing (NO.26). If the bearing was damaged, remove the RETAINER (*NO.25*) first, and then remove the bearing (*NO.26*).
→Fig 16.

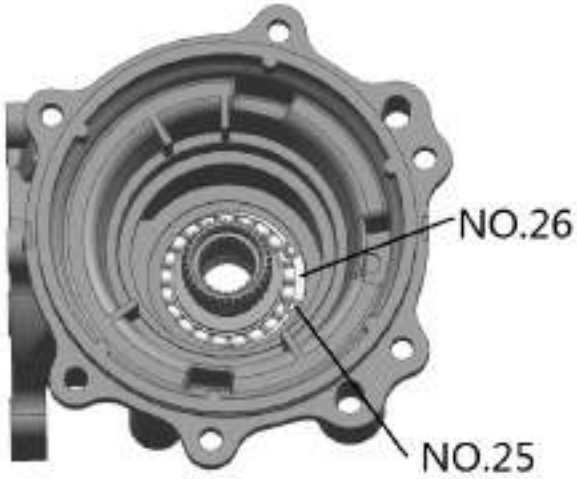

Fig 16

16. Remove the DRIVE CLUTCH COVER (*NO.24*).
→Fig 17.

Fig 17

18. Remove the OIL SEAL (*NO.5*).
→Fig 18.

Fig 18

19. Remove the BEARING RETAINER (*NO.6*) with special tool.
→Fig 19.

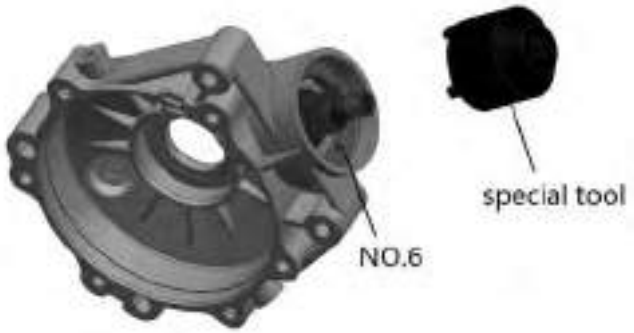

Fig 19

20. Remove the DRIVE PINION GEAR **B**.
→Fig 20.

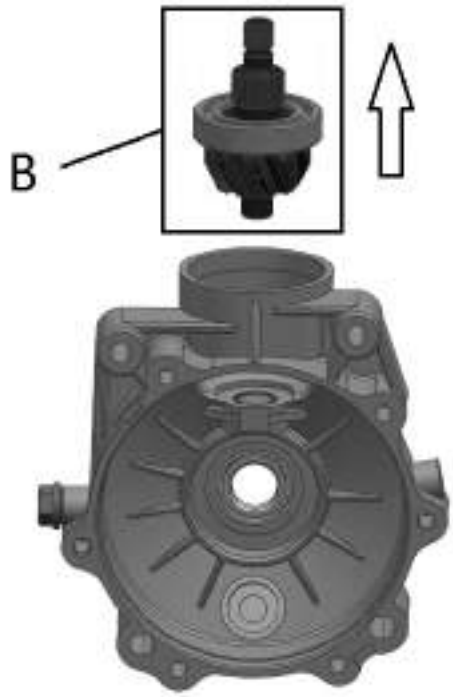

Fig 20

NOTE: The DIFFERENTIAL GEAR ASSY (A) AND THE DRIVE PINION GEAR B MUST BE REPLACED SIMULTANEOUSLY,NOT SEPARAT

5.20 FRONT GEARCASE ASSEMBLY

Note:Grease all seals and O-rings with all season Grease upon assembly

1. Mount the drive clutch cover (*NO.24*).
→Fig 1

Fig 1

2. Mount the retainer 62 (NO.25) .
→Fig 2.

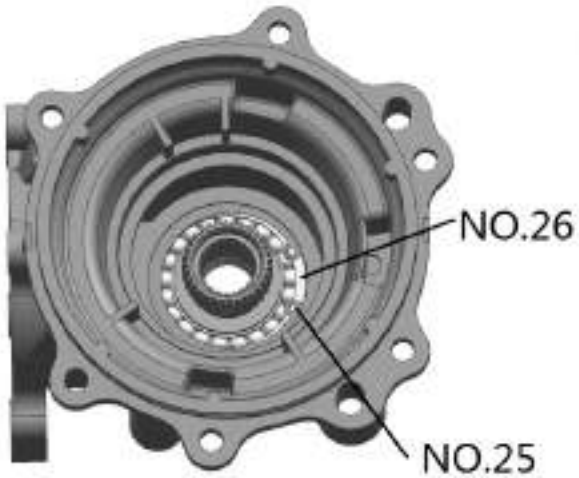

Fig 2

3. Mount the drive clutch **(***NO.23***)**.
→Fig3.

Fig 3

4.Mount the pin shaft (*NO.38*) and the shift fork (*NO.39*) **.**
→Fig 4.

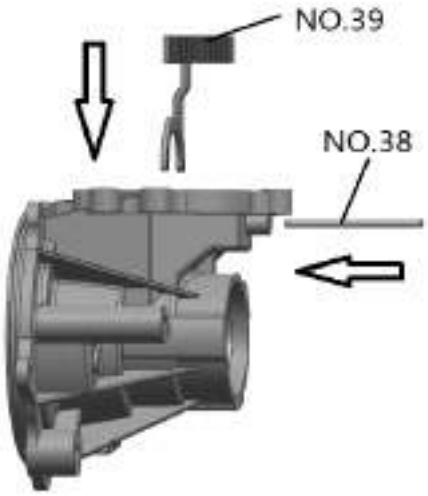

Fig 4

5.Install the screw (NO.30) and washer (NO.29), then mount the screw (NO.30) **.**
→Fig 5.

Fig 5

6. Mount the adjust shim (*NO.22*).
→Fig 6.

Fig 6

7.Install the DIFFERENTIAL GEAR ASSY **A** into the carrier housing.
→Fig 7

Fig 7

8.Install the DRIVE PINION GEAR **B** and install the BEARING RETAINER (*NO.6*) with special tool
→Fig 8.

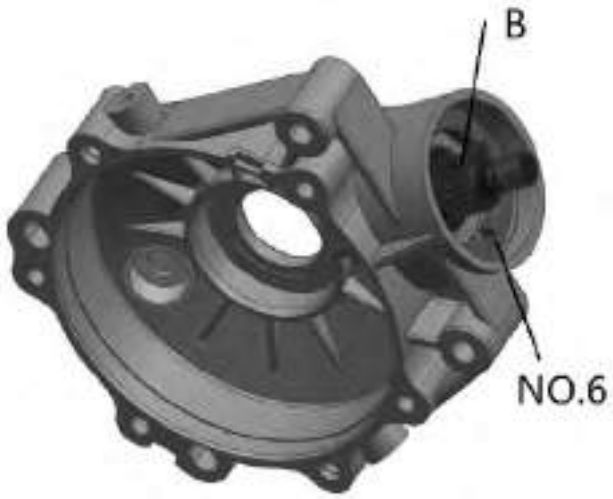

Fig 8

9.Install a new OIL SEAL (*NO.5*)
.→Fig 9

Fig 9

10. Mount the adjust shim (*NO.16*).
→Fig 10

Fig 10

11. Assemble the gearcase halves and install the bolts (*NO.29*) that secure the cover to the housing. Torque the bolts in a criss cross pattern to 20~25Nm. →Fig 11

Fig 11

12. Mount the gear motor **A**.

Important: Before assemble the gear motor (*NO.36*), make sure that the shift fork (*NO.39*) is in their correct position as shown.
→Fig 12.

Fig 12

13. Mount the four screws (*NO.37*) .
→Fig 13.

Fig 13

14. Mount the coupler (*NO.4*) .
→Fig 14

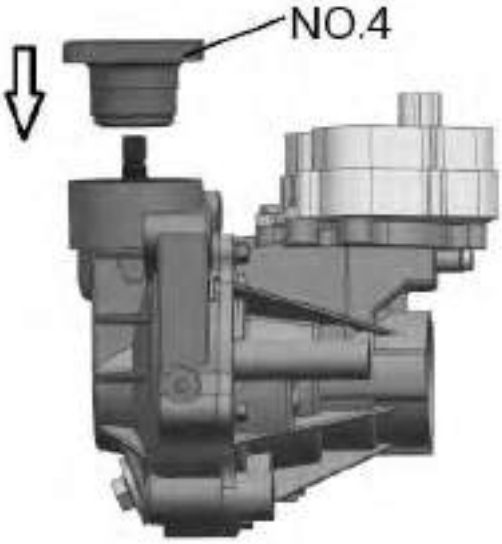

Fig 14

15. Mount the O-ring(*NO.3*).
→Fig 15

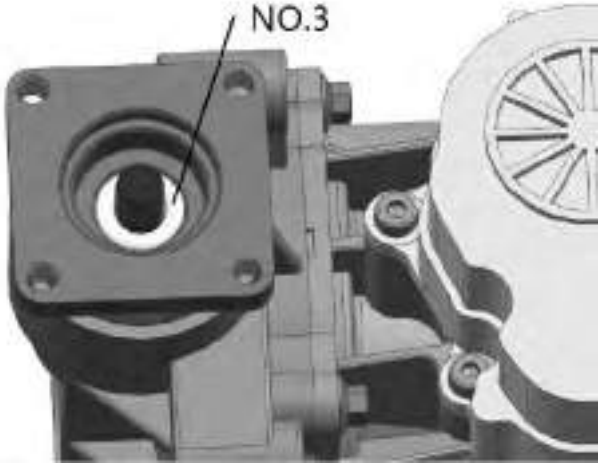

Fig 15

16. Apply some Loctite 263 thread locker on screw thread, mount the nut(*NO.3*), tighten it to a torque of 50~60Nm.
→Fig 16.

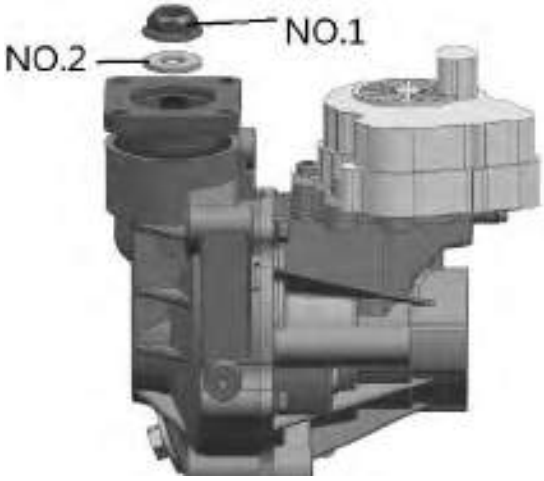

Fig 16

17. Add 200-250mL oil(85W/90GL-4).

NOTES

CHAPTER 6 TRANSMISSION

WARNING

The parts of different types/ variants/ versions maybe un-interchangeable, even some parts have almost same appearance. Always refer to Parts Manual of each CUV model for spare parts information and service.

6.1 GEAR SHIFTER REMOVAL

1. Remove parts that interfere with access to shift selector (seat, cover etc.)

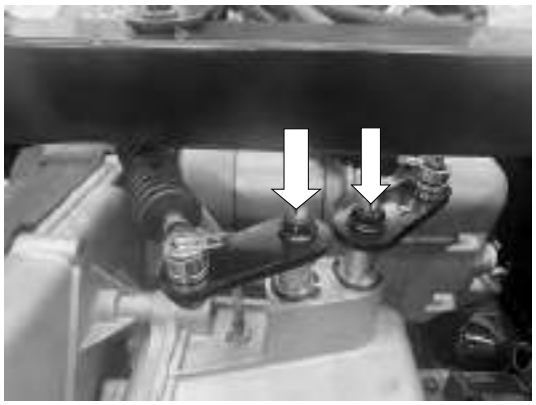

2. Disconnect the two linkage rods from transmission slides.

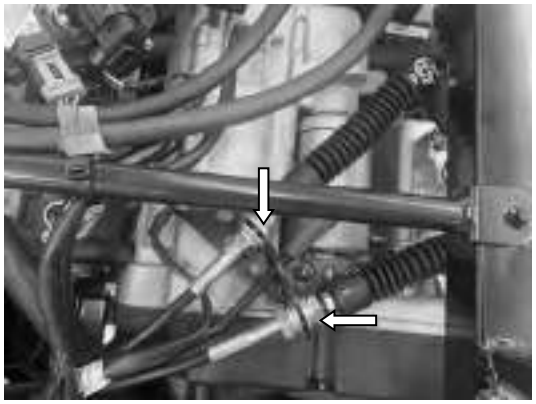

3.Remove the four screws from the instrument panel

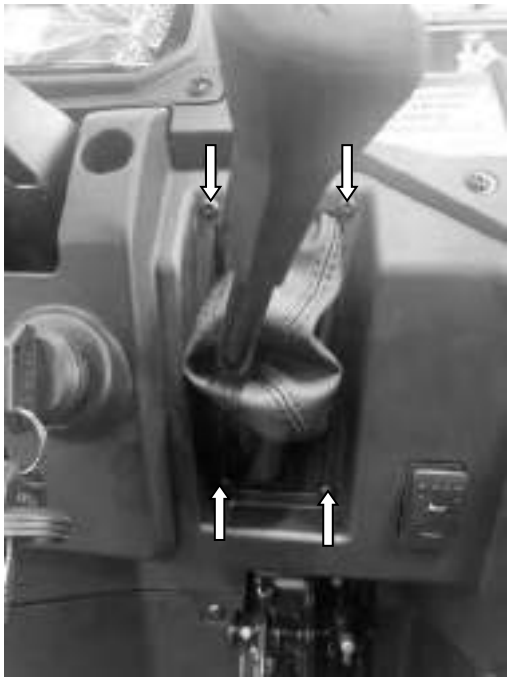

4. Remove the screw from the shifter

5. Remove the three bolts from the frame

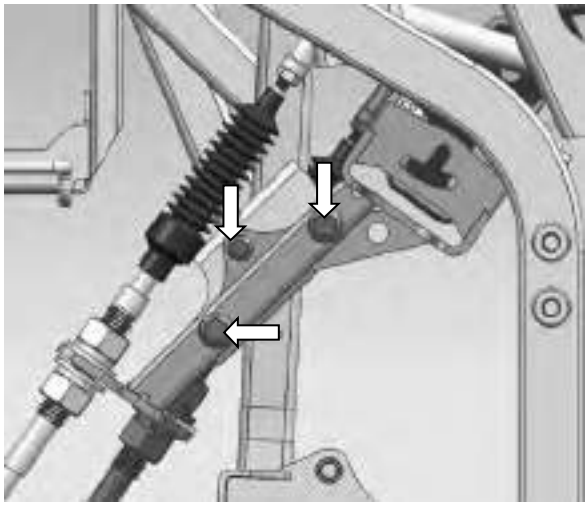

6. Remove shift support assembly

6.2 SHIFTER DISASSEMBLY

Disassemble the gear shift mechanism as shown

NOTE: Pay attention to the falling springs and steel balls

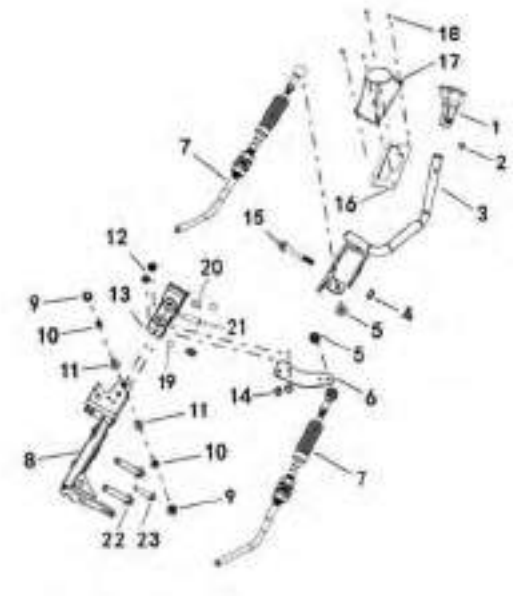

REF. No.	DESCRIPTION
1	KNOB SHIFTER
2	SCREW M5X10
3	SHIFTER LEVER WELDING ASSEMBLY
4	NUT M8
5	NUT M8
6	SHIFT CABLE HOLDER
7	SHIFT PUSH CABLE ASSEMBLY
8	SHIFT BRACKET WELDING ASSEMBLY
9	LIMIT BOLT
10	WASHER SPRING 8
11	WASHER 8
12	NUT M6
13	SHIFT INNER CORE
14	BOLT M6×20
15	BOLT M8×60
16	SHIFT TRIM MOUNTING PLATE
17	SHIFT TRIM
18	SCREW M10X1.25X32
19	STEEL BALL
20	SPRING
21	SPACER BUSH
22	BOLT M8×35
23	BOLT M8×16

6.3 SHIFTER INSTALL ATION

The assembly process is the reverse of the disassembly process

NOTE: Replace all removed bolts

6.4 SHIFT ADJUSTMENT OF STAY CABLE

Lasso adjustment is necessary when symptoms include：

- Noise on deceleration
- Inability to engage a gear
- Excessive gear clash(noise)
- Shift selectors moving out of desired range

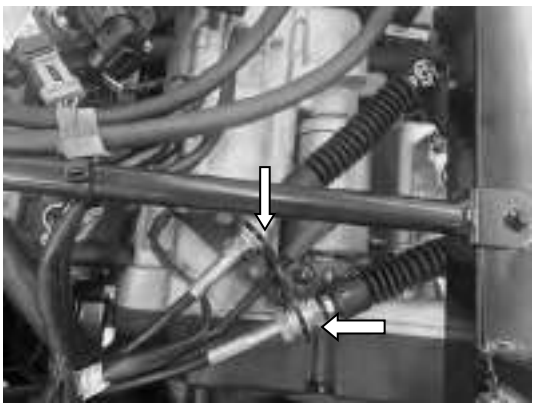

NOTE: When adjusting Lasso, always adjust both Lasso. The adjustment of one rod can prevent proper adjustment of the other rod. Remove necessary components to gain access to shift Lasso ends.

1. Inspect shift linkage tie rod ends, and pivot bushings and replace if worn or damaged. Lubricate the tie rod ends with a light aerosol lubricant or grease.
2. Loosen all rod end adjuster jam nuts.
3. Note orientation of tie rod end studs with stud up or down. Remove both rod end studs from transmission bell cranks.
4. Be sure idle speed is adjusted properly.

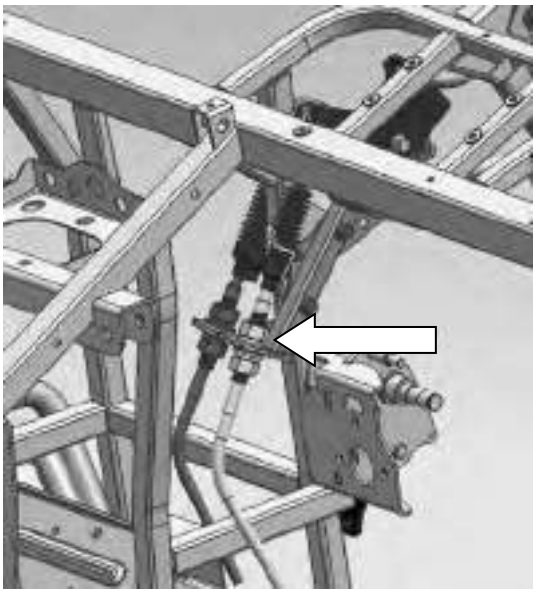

NOTE: It is important to disconnect both rod ends from the transmission bell cranks. If one Lasso is incorrectly adjusted, it can affect the adjustment of the other Lasso

Place gear selector in neutral. Make sure the transmission bell cranks are engaged in the neutral position detents.

5. Be sure the shift Lasso ends are firmly attached to the gear selector slides. Adjust the low range (inside) rod so the Lasso end is centered on the transmission bell crank. Install the lock nut to the Lasso end and torque to 35 in.lbs (4 Nm)**.**
6. Secure the lock nut after all gears are adjusted correctly

6.5 ENGINE AND TRANSMISSION REMOVAL

1. Remove seat, side panel cover L, side panel cover R, protect cover, seat frame cross brace，seat frame pipe, fuel tank, shift rods, tool box and plates.
2. Remove feed and return hoses (refer to Engine chapters).
3. Remove throttle cable wire connected to carburetor.
4. Disconnect engine from wiring harness completely.
5. Disconnect gear position indicator switches.
6. Remove fuel line connected to carburetor and drain line.

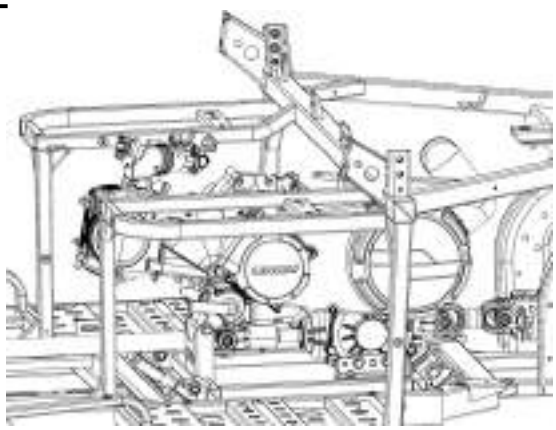

7. Loose and remove four nuts (M10x1.25) between the engine mount bracket and the frame. Loose four bolts (M12X1.25X25) and nuts (M12x1.25) from rubber dampers.

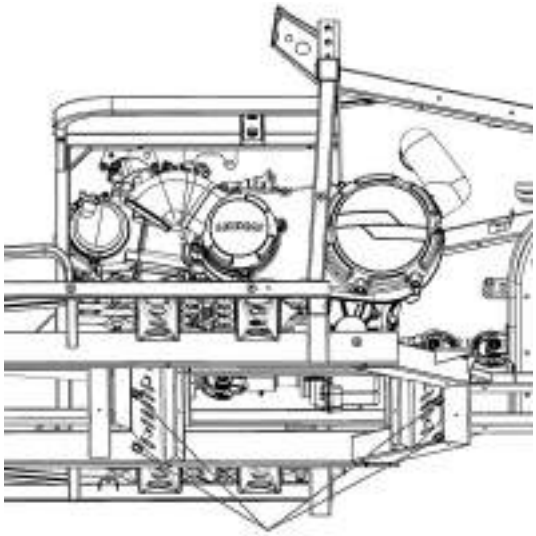

Nuts (M10X1.25)

8. Remove the front prop shaft and rear prop shaft (4WD, see chapter 5).

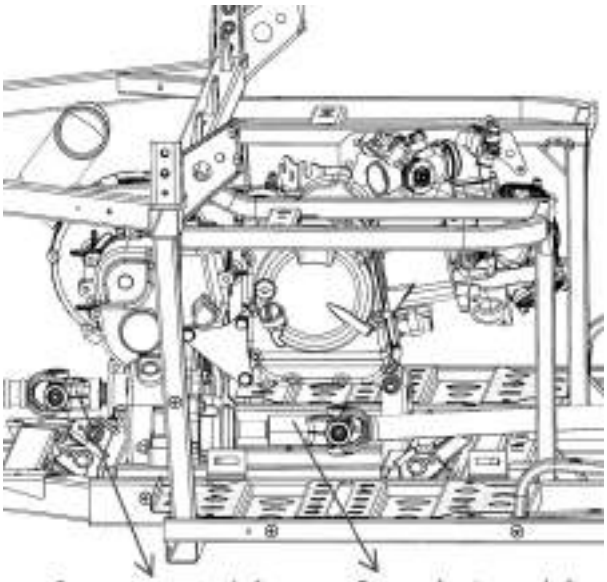

Remove rear prop shaft Remove front prop shaft

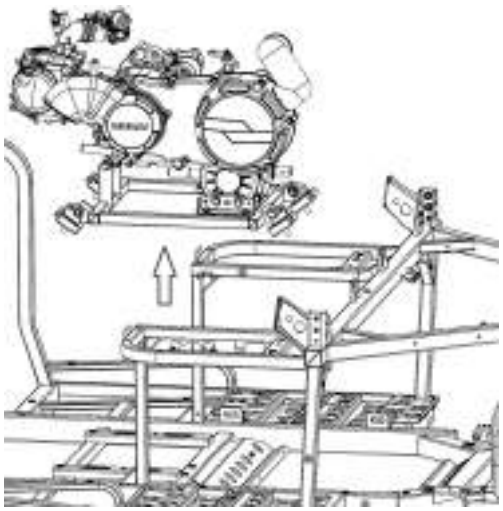

9. Remove engine, transmission and engine mount bracket installation assembly from frame.

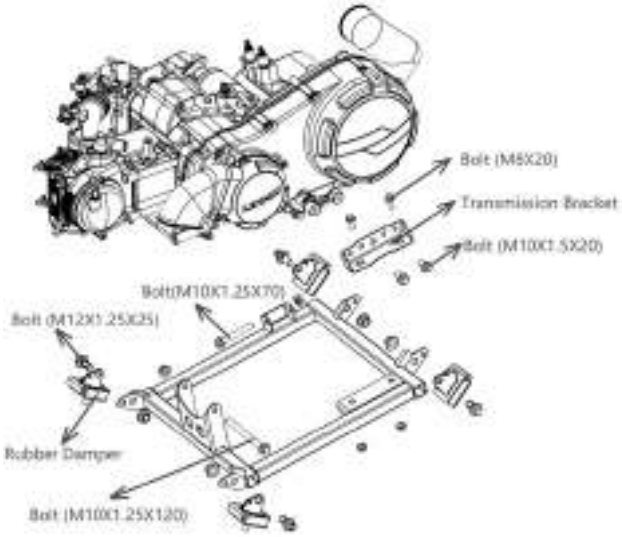

10. Remove four bolts (M12X1.25X25) and rubber dampers from engine mount bracket. Remove transmission bracket, two bolts (M10X1.5X20), two bracket bolts (M8X20), front mount bolt (M10X1.25X120) and right mount bolt (M10x1.25x70).

11. Remove engine and transmission from engine mount bracket.

6.6 ENGINE AND TRANSMISSION INSTALLATION

1.Reverse the procedure of chapter 6.5（ENGINE AND TRANSMISSION REMOVAL） to installation.

6.7 TRANSMISSION DISASSEMBLY

1. Place gears in neutral.
2. Remove gear position indicator switches.

IMPORTANT: The gear position indicator switches must be removed prior to disassembly.

3. Remove the transmission cover bolts.
4. Carefully remove the cover with a soft face hammer tap on the cover bosses.

5. Remove bearing and helical gear.

6. Remove input shaft, reverse shaft, and both shift fork shafts as an assembly.

7. Remove pinion shaft retainer plate and pinion shaft.

8. Remove front drive output housing cover screws. Carefully remove the cover with a soft face hammer tap on the cover bosses.

9. Note position of shim washers and thrust button.
10. Remove shafts as an assembly.
11. Clean all components and inspect for wear.
12. Inspect engagement dogs of gears and replace if edges are rounded.
13. Inspect gear teeth for wear, cracks, chips or

broken teeth.

14. Remove seals from transmission case.

IMPORTANT: New seals should be installed after the transmission is completely assembled.

15. Inspect bearings for smooth operation. Check for excessive play between inner and outer race.

6.8 TRANSMISSION ASSEMBLY

1. Install sprocket on front output shaft with sprocket step side inward as shown (only for 4X4).

2. Assemble front (only for 4X4).and rear output shafts

3. a. (4X4) Install front and rear output shafts with chain as an assembly.
   b. (2X4) Install rear output shaft.

4. Before installing the cover make sure the sealing surfaces are clean and dry, and shafts are fully seated in the transmission case. Apply silicon glue to mating surfaces.
5. Reinstall cover and torque bolts in a crisscross pattern in 3 steps to 14 ft. lbs. (20 Nm).
6. Install new front (only for 4X4) and rear output shaft seals.

7. Install pinion shaft with bearing.

8. Install retainer plate with flat side toward bearing.
9. Apply LoctiteTM 242(Blue) to screw threads and torque screws to 8 ft-lb. (12Nm).

10. Assemble shafts with chain and shift forks.

11. Carefully install high/reverse shaft assembly and gear cluster as a unit into their respective bearing case areas. Tap with a soft face hammer to seat shaft assemblies.

NOTE: Make sure shift shaft pins are properly positioned in the slot on selector arms.

NOTE: Be sure gear indicator switch(es) are removed from transmission case before installing shafts.

12. Install output shaft and gear assembly along with sprocket and chain.

13. Prior to reinstalling the cover make sure the mating cover surfaces are clean and dry, and shafts are fully seated in transmission case. Apply silicon to mating surfaces.
14. Reinstall main cover and torque bolts in a cross pattern in 3 step to 14 ft.lbs. (20Nm).
15. Install new input shaft seal.
16. Install drain plug with a new sealing washer. Torque drain plug to 14 ft.lb. (19Nm).
17. Install transmission and add 80W/90 oil in the recommended amount. Refer to Maintenance Chapter.
18. Install gear indicator switches. Apply LoctiteTM 242 (blue) to threads of switch screws and torque to 13-16 in. lbs. (1.5-1.9 Nm).

6.9 TROUBLE SHOOTING CHECKLIST

Check the following items when shifting difficulty is encountered

- Idle speed adjustment
- Transmission oil type/quality
- Driven clutch (CVT) deflection
- Loose fasteners on rod ends
- Loose fasteners on gear shift box
- Worn rod ends, clevis pins, or pivot arm bushings
- Linkage rod adjustment and rod end positioning
- Shift selector rail travel
- *Worn, broken or damaged internal transmission components

Check the following items when transmission locked

- Gear shifter malfunction (Selector lever end come out from slides notches), engage the Hi and Lo Gear at the same time.

NOTE: To determine if shifting difficulty or problem is caused by an internal transmission problem , isolate the transmission by disconnecting linkage rods from transmission bell cranks . Manually select each gear range at the transmission bell crank, and test ride vehicle. If it functions properly, the problem is outside the transmission.

If transmission problem remains, disassemble transmission and inspect all gear dogs for wear (rounding), damage. Inspect all bearings, circlips, thrust washers and shafts for wear.

4X4 TRANSMISSION EXPLODED VIEW

NOTES

CHAPTER 7 BRAKES

WARNING

The parts of different types/ variants/ versions maybe un-interchangeable, even some parts have almost same appearance. Always refer to Parts Manual of eachUTV model for spare parts information and service.

NOTE: Also See Chapter 2 for Maintenance Information.

7.1 SPECIFICATIONS

Front Brake Caliper		
Item	**Standard**	**Service Limit**
Brake Pad Friction material Thickness	0.157"/ 5.5mm	0.04"/ 1mm
Brake Disc Thickness	0.150- 0.164"/3.810- 4.166mm	0.140"/ 3.556mm
Brake Disc Thickness Variance Between Measurements	-	0.002 "/ 0.051m m
Brake Disc Runout	-	0.005 "/ 0.127mm

Rear Brake Caliper			
Item		**Standard**	**Service Limit**
Brake Pad Friction material Thickness	hydraulic	0.157"/ 5.5mm	0.04"/ 1mm
	Hydraulic with mechanics park	0.236"/ 6mm	
	mechanics park	0.197"/ 5mm	
Brake Disc Thickness		0.291-0.299"/7.4-7.6mm	0.281"/7.146mm
Brake Disc Thickness Variance Between Measurements		-	0.002 "/ 0.051mm
Brake Disc Run out		-	0.005 "/ 0.127mm

7.2 TORQUE

Item	Torque (ft. lbs. except where noted*)	Torque (Nm)
Front Caliper Mounting Bolts	18.0	25
Rear Caliper Mounting Bolts	18.0	25
Front Brake Disc	18.0	25
Rear Brake Disc	18.0	25
Park Brake Mouting Bolts	33	45
Banjo Bolt	15.0	21

7.3 BRAKE SYSTEM SERVICE NOTES

- It is strongly recommended always change the caliper and (or) the master cylinder as an assembly. The parts inside maybe not interchangeable due to different brake manufactures and (or) different brake type.
- Do not over – fill the master cylinder fluid reservoir.
- Make sure the brake lever and pedal returns freely and completely.

- Check and adjust master cylinder reservoir fluid level after pad service.
- Make sure atmospheric vent on reservoir is unobstructed.
- Adjust foot brake after pad service.
- Test for brake drag after any brake system service and investigate cause if brake drag is evident.
- Make sure caliper moves freely on guide pins (where applicable) .
- Inspect caliper piston seals for foreign material that could prevent caliper pistons from returning freely.
- Perform a brake burnishing procedure after install new pads to maximize service life.
- DO NOT lubricate or clean the brake components with aerosol or petroleum products. Use only approved brake cleaning products.

7.4 BURNISHING PROCEDURE

Brake pads (both hydraulic and mechanical) must be burnished to achieve full braking effectiveness. Braking distance will be extended until brake pads are properly burnished. To properly burnish the brake pads, use the following procedure.

1. Choose an area large enough to safely accelerate the CUV to 50 km/h (30 mph) and to brake to a stop.
2. Using hi gear, accelerate to 50 km/h (30 mph); then compress brake lever (pedal) to decelerate to 0-8km/h (5 mph).
3. Repeat procedure on each brake system 20 times until brake pads are burnished.
4. Adjust the mechanical parking brake (if necessary).)
5. Verify that the brake light illuminates when the hand lever is compressed or the brake pedal is depressed.

⚠ WARNING

Failure to properly burnish the brake pads could lead to premature brake pad wear or brake loss. Brake loss can result in severe injury.

7.5 BRAKE BLEEDING-FLUID CHANGE

NOTE: When bleeding the brakes or replacing the fluid always start with the caliper farthest from the master cylinder.

CAUTION:

Always wear safety glasses.

CAUTION:

Brake fluid is highly corrosive. Do not spill brake fluid on any surface of the CUV.

This procedure should be used to change fluid or bleed brakes during regular maintenance.

1. Clean reservoir cover thoroughly.

2. Remove cover from reservoir.

3. If changing fluid, remove old fluid from reservoir with a brake fluid pump or similar tool.
4. Add brake fluid up to the indicated MAX level on the reservoir.

DOT 3 Brake Fluid

5. Begin bleeding procedure with the caliper that is farthest from the master cylinder. Install a box end wrench on the caliper bleeder screw. Attach a clean, clear hose to the fitting and place the other end in a clean container. Be sure the hose fits tightly on the fitting.
6. Slowly pump foot pedal until pressure builds and holds.
7. Hold brake pedal on to maintain pedal pressure, and open bleeder screw. Close bleeder screw and release foot pedal.

NOTE: Do not release foot pedal before bleeder screw is tight or air may be drawn into master cylinder.

8. Repeat procedure until clean fluid appears in bleeder hose and al air has been purged. Add fluid as necessary to maintain level in reservoir.

CAUTION:

Maintain at least 1/2 "(13mm) of brake fluid in the reservoir to prevent air from entering the master cylinder.

9. Tighten bleeder screw securely and remove bleeder hose.
10. Repeat procedure steps 5- 9 for the remaining

calipers.

11. Add brake fluid to MAX level inside reservoir.
    Master Cylinder Fluid Level
    Between the MIN line and the MAX line of reservoir.
12. Install master cylinder reservoir cover.
13. Field test machine at low speed before putting into service. Check for proper braking action and pedal reserve. With pedal firmly applied, pedal reserve should be no less than 1/2 " (13mm).
14. Check brake system for fluid leaks and inspect all hoses and lines for wear or abrasion. Replace hose if wear or abrasion is found.

7.6 PARKING BRAKE AND BRAKE LINE INSPECTION

1. Inspect the spring on the parking brake lever assembly.

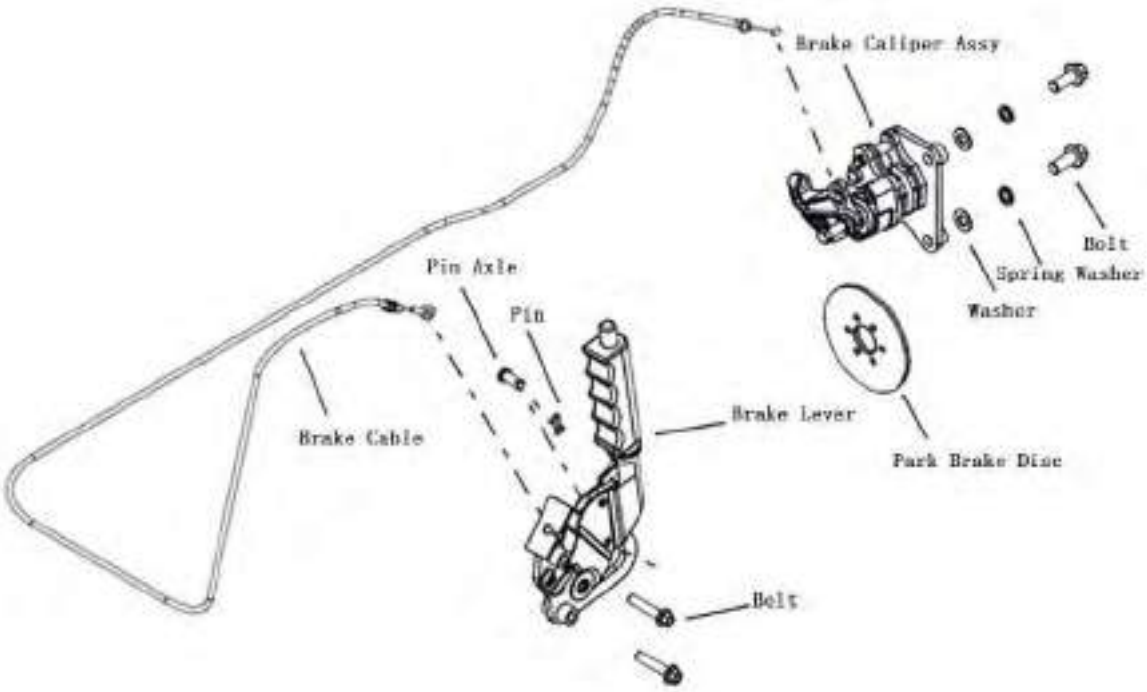

2. Inspect the parking brake cable at the parking brake lever assembly on the brake caliper.

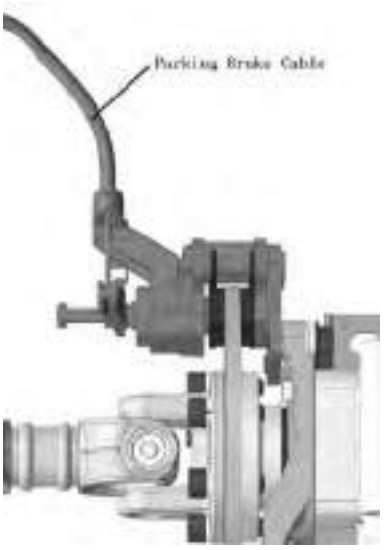

3. Inspect the brake lines and brake line connections for possible leaks or loose lines.

7.7 PARKING BRAKE ADJUSTMENT

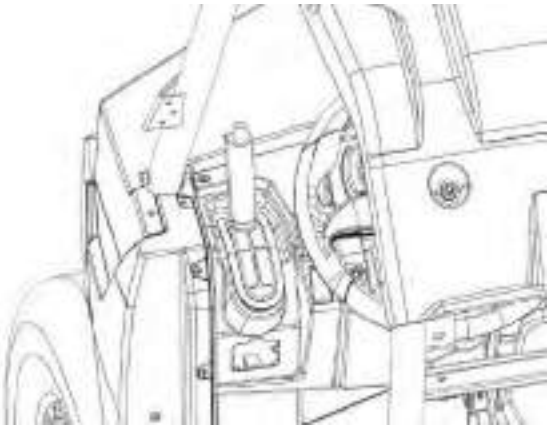

Parking Brake Inspection

1. Push the parking brake up with your hand.
2. After 2 to 4 clicks of lever travel, the vehicle should not roll while parked.
3. If the vehicle moves, adjustment is necessary.
4. Adjust the parking brake where the cable attaches to the lever assembly on the rear brake caliper.

Parking Brake Adjustment

1. Place the vehicle in neutral on a flat level surface.
2. Carefully lift the rear of the vehicle off the ground and stabilize on jack stands.
3. Loosen the jam nut (A) on the rear caliper adjustment bolt (B).
4. Tighten the adjustment bolt (B) until the rear tire will not roate.
5. Back the adjustment bolt (B) out 1/4 turn.
6. Tighten the jam nut (A) while holding the adjustment Bolt(B) in place.

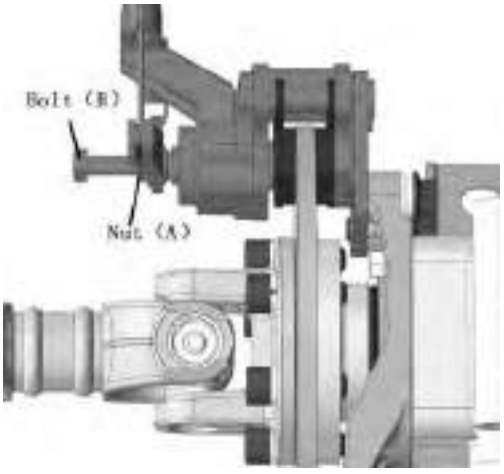

7.8 PARKING BRAKE REAR CALIPER REMOVAL / INSTALL

Park Brake Caliper Disassembly / Pad Inspection

NOTE: Do not get oil, grease, or fluid on the park brake pads. Damage to the pads may cause the pads to function improperly.

1. Loosen the two brake caliper bolts in equal increments. Remove the bolts from the bracket and lift park brake assembly out.

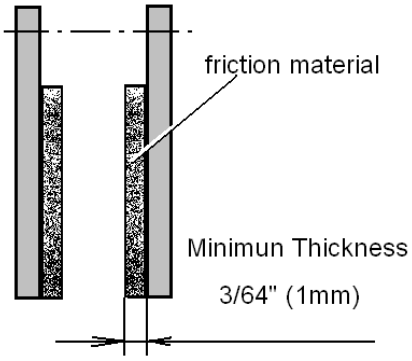

2. Measure the thickness of the caliper parking brake pads. Replace pads if worn beyond the service limit.
   Service Limit 0.3/64"(1 mm)

Park Brake Caliper Installation

1. Install the park brake assembly into place. Tighten the two bolts in increments for proper installation.

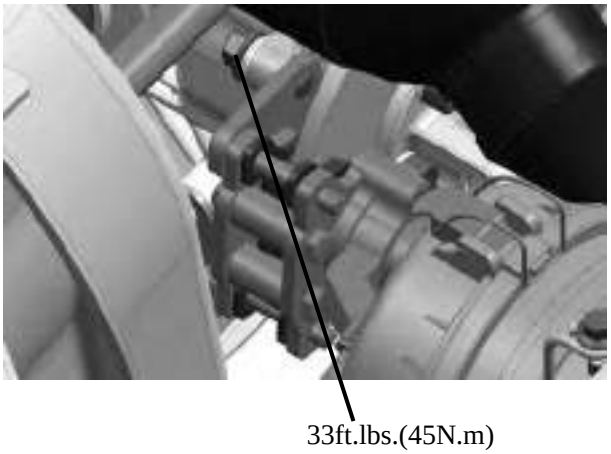

2. Torque the two bolts to 33ft.lbs. (45 Nm).
3. Test the park brake for proper function.

7.9 FRONT PAD REMOVAL / INSPECTION / INSTALLATION

NOTE: The brake pads should be replaced as a set.

REMOVAL

1. Elevate and support front of CUV safely.

CAUTION:

Use care when supporting vehicle so that it does not tip or fall. Severe injury may occur if machine tips or falls.

2. Remove the front wheel.

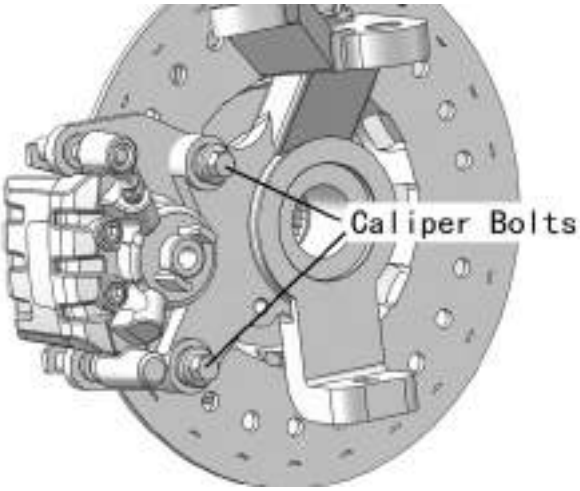

3. Remove the two caliper bolts and caliper from mounting bracket.

4. Push caliper piston into caliper bore slowly using a C-clamp or locking pliers with pads installed.

NOTE: Brake fluid will be forced through compensating port into master cylinder fluid reservoir when piston is pushed back into caliper. Remove excess fluid from reservoir as required.

5. Push mounting bracket inward and slip outer brake pad past edge. Remove inner pad.

INSPECTION

Measure the thickness of the pad friction material. Replace pads if worn beyond the service limit.

Service Limit 0.3/64"(1 mm)

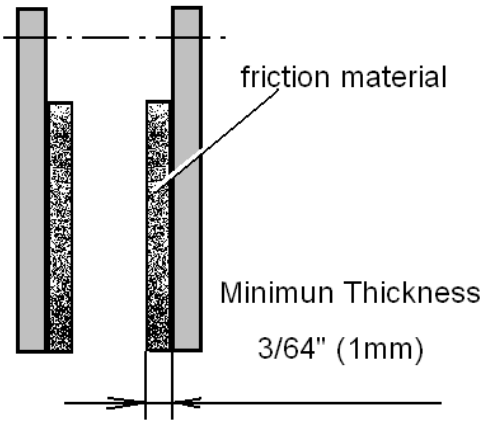

INSTALLATION

1. Lubricate mounting bracket pins with a light film

of All Season Grease, and install rubber dust boots.

2. Compress mounting bracket and make sure dust boots are fully seated. Install pads with friction material facing each other. Be sure pads and disc are free of dirt or grease.
3. Install caliper on hub strut, and torque mounting bolts.
   Front Caliper Mounting Bolts
   Torque 18 ft. lbs. (25 Nm)
4. Slowly pump the brake lever until pressure has been built up. Maintain at least 1/2 "(13 mm) of brake fluid in the reservoir to prevent air from entering the brake system.
5. Install the adjuster screw and turn clockwise until stationary pad contacts disc, then back off 1/2 turn (counter clockwise).
6. Be sure fluid level in reservoir is up to MAX line inside reservoir and install reservoir cap.
   Master Cylinder Fluid
   Up to MAX line inside reservoir
7. Install wheels and torque wheel nuts.
8. It is recommended that a burnishing procedure be performed after installation of new brake pads to extend service life and reduce noise. Start machine and slowly increase speed to 30 mph. Gradually apply brakes to stop machine. Repeat procedure 10 times.

7.10 FRONT DISC INSPECTION / REMOVAL / REPLACEMENT

INSPECTION

1. Visually inspect the brake disc for nicks, scratches, or damage.
2. Measure the disc thickness at 8 different points around the pad contact surface using a 0-1" micrometer and a dial indicator. Replace disc if worn beyond service limit.
   Brake Disc Thickness
   New 0.150-0.164" (3.810 - 4.166 mm)
   Service Limit 0.140"（3.556 mm）
   Brake Disc Thickness Variance
   Service Limit 0.002 " (0.051 mm)

difference between measurements

3. Mount dial indicator as shown to measure disc runout on the dial indicator. Replace the disc if runout exceeds specifications.
   Brake Disc Runout
   Service Limit 0.005" (0.127 mm)

REMOVAL/ REPLACEMENT

1. Removal caliper and hub. Apply heat to the hub in the area of the brake disc mounting bolts to soften the bolt locking agent.
2. Remove bolts and disc.
3. Clean mating surface of disc and hub.
4. Install new disc on hub and tighten to specified.

CAUTION:

Always use new brake disc mounting bolts.
Front Brake Disc Mounting Bolt Torque :
18 ft. lbs. (25 Nm)

7.11 FRONT CALIPER REMOVAL/ INSPECTION / INSTALLATION

CAUTION:

The caliper is a non-serviceable component; it must be replaced as an assembly.

NOTE: If any special service needed, contact the CUV manufacture via the agent for the parts and special instruction.

REMOVAL

1. Remove wheel, remove caliper from the strut.
2. Loosen and remove brake hose to caliper. Place a container under caliper to catch fluid draining.

INSPECTION

Inspect caliper body for nicks, scratches or worn.

Replace caliper as an assembly if any problem exists.

INSTALLATION

1. Install caliper on hub strut, Apply Loctite™ 243 to screw threads and Install new bolts.
   Front Caliper Mounting Bolt Torque
   18 ft. lbs. (25 Nm)
2. Install brake hose and tighten to specified torque.
   Banjo Bolt Torque: 15 ft. lbs. (21 Nm)

NOTE: If new brake pads are installed, it is recommended that a burnishing procedure be performed after installation of new brake pads to extend service life and reduce noise. Start machine and slowly increase speed to 30 mph. Gradually apply brakes to stop machine. Repeat procedure 10 times.

7.12 REAR BRAKE PAD REMOVAL/ INSPECTION / INSTALLATION

NOTE: The brake pads should be replaced as a set.

REMOVAL

1. Remove the cargobox.

CAUTION:

Use care when remove the cargobox so that it does not turn over. Severe injury may occur if cargobox turns over.

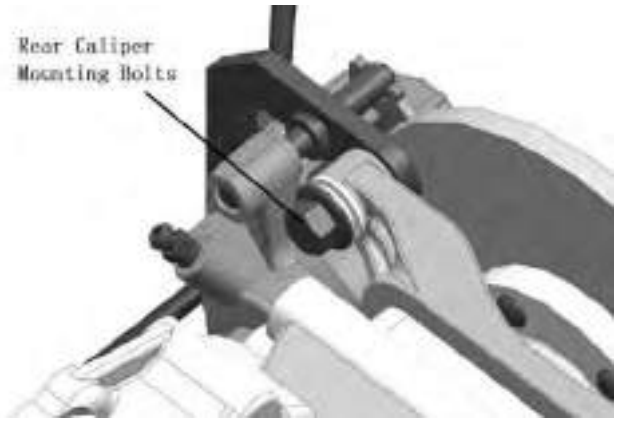

2. Remove the two caliper bolts and lift caliper off of disc.

NOTE: When removing caliper, be careful not to damage brake line. Support caliper so as not to kink or bend brake line.

3. Push caliper piston into caliper bore slowly using a C-clamp or locking pliers with pads installed.

NOTE: Brake fluid will be forced through compensating port into master cylinder fluid reservoir when piston is pushed back into caliper. Remove excess fluid from reservoir as required.

4. Remove the brake pads.
5. Clean the caliper with brake cleaner or alcohol.

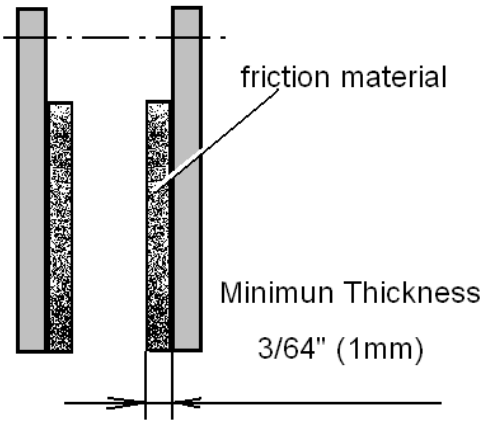

INSPECTION

Measure the thickness of the pad friction material. Replace pads if worn beyond the service limit.

Service Limit 0.3/64"(1 mm)

INSTALLATION

1. Install new pads in caliper body.
2. Install caliper and torque mounting bolts.
   Brake Caliper Torque: 18 ft. lbs. (25 Nm)
3. Turn adjuster screw back in finger tight using a hex wrench.
4. Slowly pump the brake lever until pressure has been built up. Maintain at least 1/2 "(13 mm) of brake fluid in the reservoir to prevent air from entering the brake system.
5. Install wheels, burnishing procedure should be performed.

7.13 REAR CALIPER REMOVAL/ INSPECTION/ INSTALLATION

CAUTION:

The caliper is a non-serviceable Component; it must be replaced as an assembly.

NOTE: If any special service needed, contact the CUV manufacture via the agent for the parts and special instruction.

1. Remove the cargobox.

CAUTION:

Use care when remove the cargobox so that it does not turn over. Severe injury may occur if cargobox turns over.

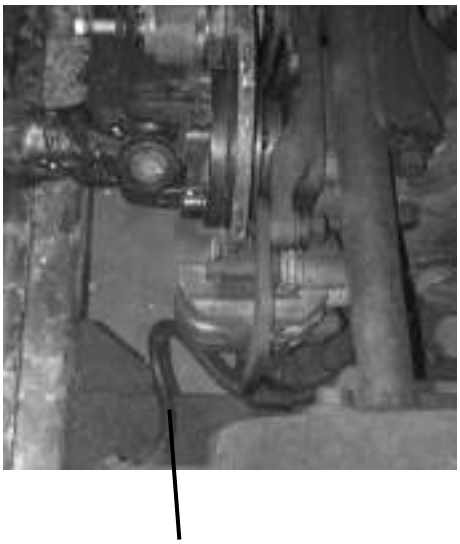

2. Use a wrench to remove the brake line. Place a container to catch brake fluid draining from brake lines.
3. After the fluid has drained into the container,

remove the caliper mounting bolts and remove caliper.

4. Remove brake pad as described above.
5. Inspect surface of caliper for nicks, scratches or damage and replace if necessary.
6. Install brake pads in caliper body with friction material facing each other, with the spacer between the pads. Install retaining pin through outer pad, pad spacer and inner pad.
7. Install caliper and torque mounting bolts to 18 ft.lbs. (25 Nm).
8. Install brake hose and tighten to specified torque.
   Banjo Bolt Torque: 15 ft. lbs. (21 Nm)
9. Bleed.
10. Field test unit for proper braking action before putting into service. Inspect for fluid leaks and firm brakes. Make sure the brake is not dragging when lever is released. If the brake drags, recheck assembly and installation.
11. Install the rear wheel and wheel nuts. Carefully lower the vehicle.

NOTE: If new brake pads are installed, it is recommended that a burnishing procedure be performed after installation of new brake pads to extend service life and reduce noise.

7.14 REAR BRAKE DISC INSPECTION / REMOVAL / REPLACEMENT

INSPECTION

1. Visually inspect the brake disc for nicks, scratches, or damage.
2. Measure the disc thickness at 8 different points around the pad contact surface using a 0-1" micrometer and a dial indicator. Replace disc if worn beyond service limit.
   Brake Disc Thickness
   New 0.291-0.299"/7.4-7.6mm
   Service Limit 0.281"/7.146mm
   Brake Disc Thickness Variance
   Service Limit 0.002 " (0.051 mm)
   difference between measurements
3. Mount dial indicator as shown to measure disc

runout on the dial indicator. Replace the disc if runout exceeds specifications.

Brake Disc Runout
Service Limit 0.005" (0.127 mm)

REMOVAL/ REPLACEMENT

1. Remove the cargobox .
2. Remove calipers.
3. Remove bolts and disc from the flange.
4. Clean mating surface of disc.
5. Install new disc on flange.
   Tighten to specified.
   Rear Brake Disc Mounting Bolt Torque :
   18 ft. lbs. (25 Nm)

CAUTION:

Always use new brake disc mounting bolts.

NOTES

CHAPTER 8 ELECTRICAL

8.1 PARTS INSPECTION AND SERVICE

HEADLIGHT LAMP REPLACEMENT

1. Use LED 12V 7.2W.
2. Pull the Headlight plug off the wire harness remove the screw①、②、③、④.
3. Replace a new headlight assy.
4. Test the headlight .

Note: can not replace the bulb separately

HEADLIGHT ADJUSTMENT

1. The headlight beam can be adjusted vertically .
2. Place the vehicle on a level surface with the headlight approximately 9.8'(3m) from a wall.
3. Measure the distance from the floor to the center of the headlight and make a mark on the wall at the same height.
4. Start the engine and turn the headlight switch to low beam.
5. Observe headlight aim. The most intense part of the headlight beam should be aimed 2.1' ~4.3'(54~108mm) below the mark placed on the wall in step 2. NOTE : Riding weight must be included on the seat.
6. Adjust screw ⑤and make beam to desired position.

TAILLIGHT / BRAKELIGHT LAMP REPLACEMENT

1.Pull the Taillight plug off the wire harness ,remove the screw ①、②、③、④.

2.Turn and remove the lamp base⑤or⑥ ,Remove bulb and replace it with recommended bulb.

3.Reinstall the lamp base removed in step 2.

4.Test the taillight / brake light.

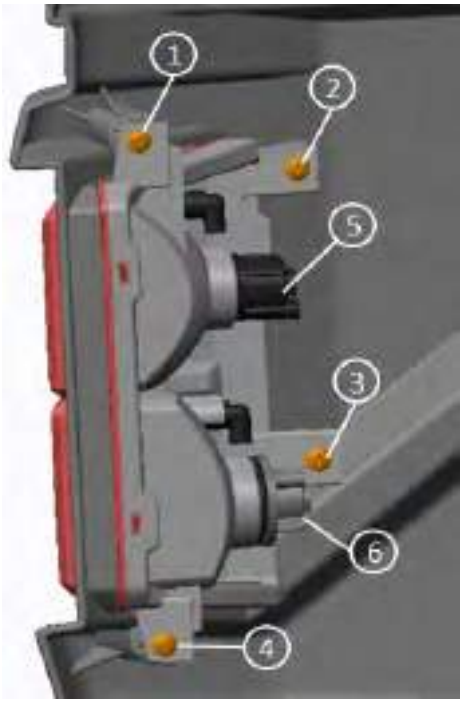

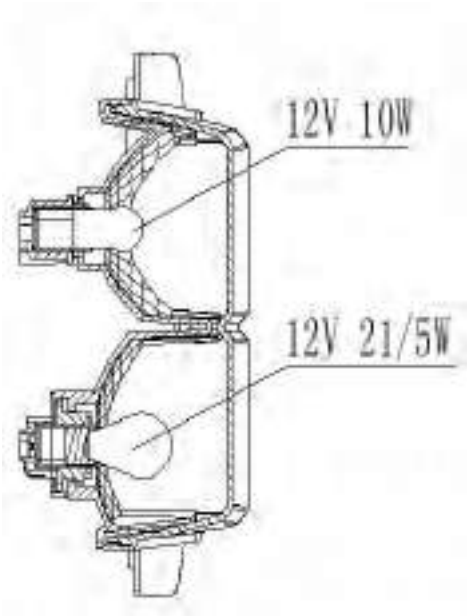

8.2 BATTERY

Battery electrolyte is poisonous. It contains sulfuric acid. Serious burns can result from contact with skin, eyes or clothing Antidote:
External: Flush with water.

Internal: Drink large quantities of water or milk. Follow with milk of magnesia, beaten egg, or vegetable oil. Call physician immediately.

Eyes: Flush with water for 15 minutes and get prompt medical attention.

Batteries produce explosive gases. Keep sparks, flame, cigarettes, etc. away. Ventilate when charging or using in an enclosed space. Always shield eyes when working near batteries.

KEEP OUT OF REACH OF CHILDREN

WARNING: The gases given off by a battery are explosive. Any spark or open flame near a battery can cause an explosion which will spray battery acid on anyone close to it. If battery acid gets on anyone, wash the affected area with large quantities of cool water and seek immediate medical attention.

Battery Maintenance

1. If the vehicle will not be used for more than one month, remove the battery, fully charge it, and then place it in a cool, dry place. If the battery will be stored for more than two months, check it at least once a month and fully charge it if necessary.

CAUTION

To charge this battery, a specified battery charger is required. Using a conventional battery charger will damage the battery.

2. Ensure to the cables are properly routed when installing the battery.

BATTERY TESTING

Whenever a service complaint is related to either the starting or charging systems, the battery should be checked first.
Following are three tests which can easily be made on a battery to determine its condition: OCV Test, Specific Gravity Test and Load Test.

MF (Maintenance Free) battery does not require the Specific Gravity Test and Refill

Open Circuit Voltage Test

Battery voltage should be checked with a digital multi tester. Readings of 12.6 or less require further battery testing and charging.

NOTE: Lead acid batteries should be kept at or near a full charge as possible.

Load test

CAUTION: Remove spark plug high tension leads and connect securely to engine ground before proceeding.

NOTE: This test can only be performed on machines with electric starters. This test cannot be performed with an engine or starting system that is not working properly.
A battery may indicate a full charge condition in the OCV test and the specific gravity test, but still may not have the storage capacity necessary to properly function in the electrical system. For this reason, a battery capacity or load test should be conducted whenever poor battery performance is encountered. To perform this test, hook a multi tester to the battery in the same manner as was done in the OCV test. The reading should be 12.6 volts or greater. Engage the electric starter and view the registered battery voltage while cranking the engine. Continue the test for 15 seconds. During this cranking period, the observed voltage should not drop below 9.5 volts. If the beginning voltage is 12.6 or lower and the cranking voltage drops below 9.5 volts during the test, replace the battery.

8.3 IGNITION SYSTEM

IGNITION SYSTEM TROUBLESHOOTING

No Spark, Weak or Intermittent Spark

- Spark plug gap incorrect
- Fouled spark plug
- Faulty spark plug cap or poor connection to high tension lead
- Related wiring loose, disconnected, shorted, or corroded
- Engine stop switch or ignition switch faulty
- Terminal board or connections wet, corroded
- Poor ignition coil ground (e.g. coil mount loose or corroded)
- Faulty stator (measure resistance of all ignition related windings)
- Incorrect wiring (inspect color coding in connectors etc.)
- Faulty ignition coil winding (measure resistance of primary and secondary)
- Worn magneto (RH) end crankshaft bearings
- Sheared flywheel key
- Flywheel loose or damaged
- Trigger coil air gap too wide (where applicable) should be 0.030-0 .050" (0. 75-1.25 mm)
- Excessive crankshaft run out on magneto (RH) end should not exceed 0.005" (0.13mm)
- Faulty ECU(EFI)

CIRCUIT DIAGRAM

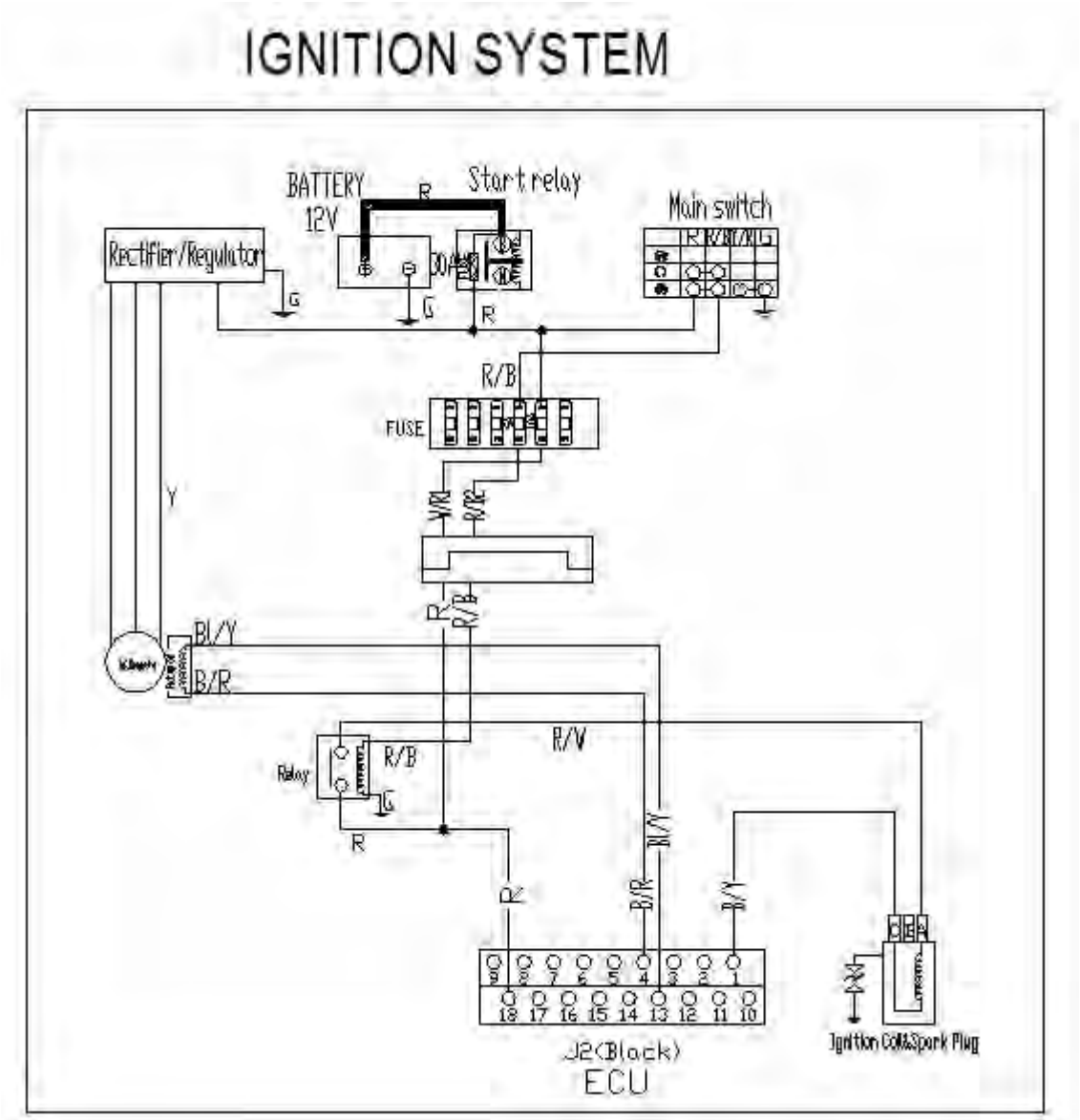

IF THE IGNITION SYSTEM FAILS TO OPERATE

Procedure

Check:

1. Fuse (Main)
2. Battery
3. Spark plug
4. Ignition spark gap
5. Spark plug cap resistance
6. Ignition coil
7. Pickup coil resistance
8. Main switch
9. Wiring connection (entire ignition system)

1.Fuse → NO CONTINUITY

Check switches → Replace the fuse.

⇩ CONTINUITY

2. Battery → INCORRECT

- Check the battery condition.

Refer to "BATTERY INSPECTION"

- Clean battery terminals.
- Recharge or replace the battery.

⇩ CORRECT

3.Spark plug → OUT OF SPECIFICATION

- Check the spark plug condition.
- Check the spark plug type.
- Check the spark plug gap.

Repair or replace the spark plug
Standard spark plug: DR8EA(NGK)

Spark plug gap: 0.6 ~ 0.7mm

⇩ CORRECT

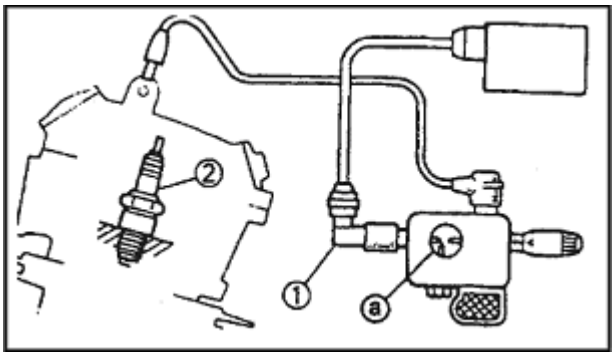

4.Ignition spark gap

● Disconnect the spark plug cap from the spark plug

●Connect the ignition tester 1 as shown. 2 Spark plug

●Turn the main switch to "ON".

●Check the ignition spark gap .

●Check the spark by pushing the starter switch, and increase the spark gap until a misfire occurs.

MEETS SPECIFICATION

The ignition system is not faulty.

Minimum spark gap: 0.6mm (0.24 in)

OUT OF SPECIFICATION OR NO SPARK

5.Resistive cable with Spark plug cap resistance

●Remover the spark plug cap.

●Remover the resistive cable from the ignition coil

●Connect the pocket tester (ΩX1 k) to the spark plug cap and the resistive cable terminal.

NOTE:

● When removing the spark plug cap. do not pull the spark plug cap from the Ignition coil.

●Remove→Turning counterclockwise

●Connect →Turning clockwise.

●Check the high tension cord when connecting the spark plug cap.

Tester (+) lead →
Spark plug side①
Tester (—) lead→
High tension cord side ②

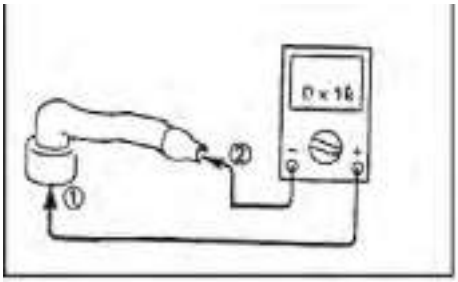

Spark plug cap resistance: 5.2KΩ(20 ℃)

OUT OF SPECIFICATION → Replace the spark plug cap

⇩ CORRECT

*

6. Ignition coil resistance

Disconnect the ignition coil connector from the wire harness.

- Connect the pocket tester (1) to the ignition coil.
- Check if the primary coil has the specified resistance.

Primary coil resistance: 0.58 ±0.058Ω(20 ℃)

Tester (+) lead
Right Terminal
Tester (—) lead
Left Terminal

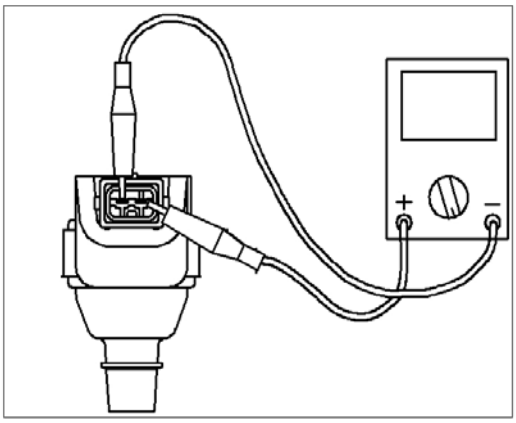

- Remover the resistive cable from the ignition coil
- Connect the pocket tester (Ω×1k) to the ignition coil.
- Check the secondary has the specified resistance

Tester (+) lead
Spark plug lead
Tester (—) lead
Green Terminal

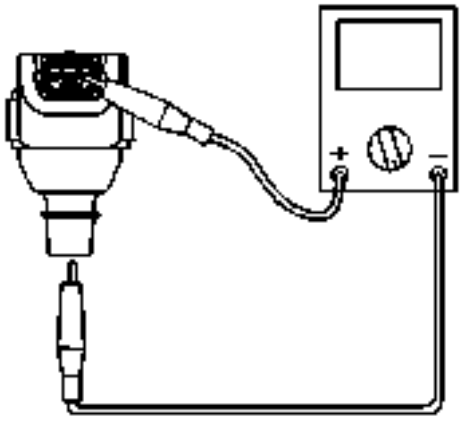

Secondary coil resistance: 6.8±0.96 KΩ(20℃)

OUT OF SPECIFICATION → Replace the ignition coil.

⇩ CORRECT

7. Pickup coil resistance

● Disconnect the pickup coil coupler from the wire harness.
●Connect the pocket tester (Ω 100) to the pickup coil coupler.

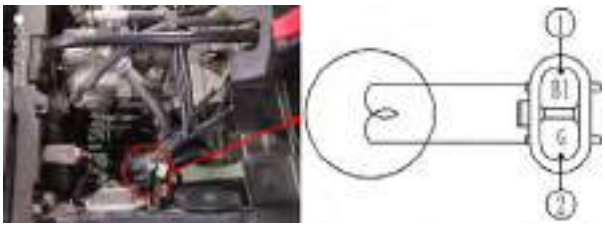

Tester (+) lead →

BI Terminal ①

Tester (-) lead→

G Terminal ②

● Check the pickup coil has the specified resistance.

Primary coil resistance:
120 -160Ω (20℃)

OUT OF SPECIFICATION

Replace the pickup coil.

8.Main switch

CHECK SWITCHES

CORRECT

NO CONTINUITY

Replace the main switch

9.Wiring connection
●Check the connection of the entire ignition system
Refer to “CIRCUIT DIAGRAM”.

CORRECT

NO CONTINUITY

Correct

Replace the ECU

8.4 CHARGING SYSTEM

CHARGING SYSTEM CIRCUIT DIAGRAM

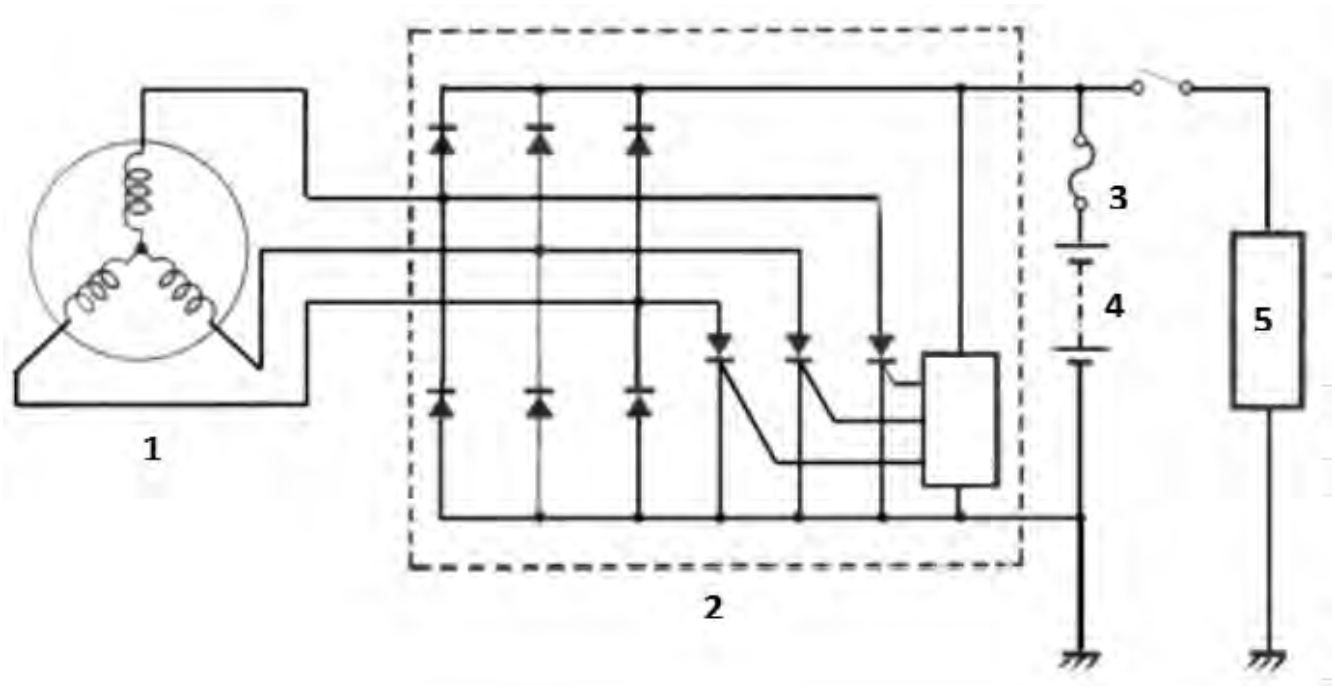

1.Magneto 2.Voltage Regulator 3.Fuse 4.Battery 5.Load

CURRENT DRAW - KEY OFF

CAUTION: Do not connect or disconnect the battery cable or ammeter with the engine running. Damage will occur to light bulbs and speed limiter.
Connect an ammeter in series with the negative battery cable. Check for current draw with the key off, if the draw is excessive, loads should be disconnected from the system one by one until the draw is eliminated. Check component wiring as well as the component for partial shorts to ground to eliminate the draw.

Current draw key off:
Maximum of 0.01DCA(10mA)

key off, don't use the electric start.

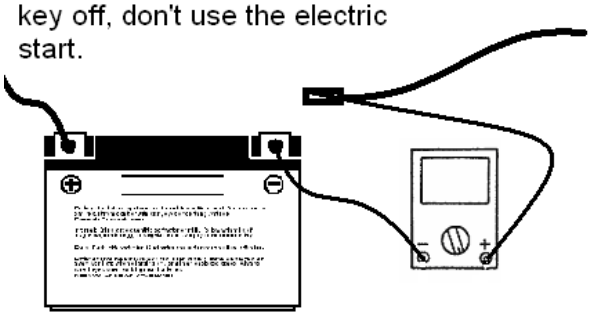

CHARGING SYSTEM

Procedure

Check:

1. Fuse (Main)
2. Battery
3. Charging voltage
4. Stator coil resistance
5. Wiring system (entire charging system)

1. fuse

NO CONTINUITY

Replace the fuse

2. Battery

Check the battery condition.
Refer to "BATTERY INSPECTION"

INCORRECT

Clean battery terminals
Recharge or replace the battery

3. Charging voltage

Connect the engine tachometer to the spark plug lead.

●Connect the pocket tester (DC20V) to the battery

Test (+) lead→
Battery (+) terminal ①
Tester (-) lead→
Battery (-) terminal ②

Measure the battery terminal voltage.
start the engine and accelerate to about 5,000rpm

●check the terminal voltage

Measured voltage-terminal Voltage:
0.2-2.5V up

NOTE: Use a fully changed battery.

MEETS SPECITICATION

The charging circuit is not faulty
Replace the battery

OUT OF SPECICATION

4. Starter coil resistance
Remove the A.C. magneto coupler from wire harness
Connect the pocket tester (ΩX1) to the stator coil
Tester (+) lead –yellow terminal
Tester (-) lead –yellow terminal
Measure the stator coil resistance
Stator coil resistance 0.3-1.1Ω（20℃）

OUT OF SPECITICATION

Replace the stator coil

MEETS SPECIFICATION

5.Wiring connection
check the entire charging system for connections
Refer to “CIRCUIT DIAGRAM”

POOR CONNECTION

correct

CORRECT

Replace the rectifier/regulator

8.5 ELECTRICS STARTING SYSTEM

DIAGRAM

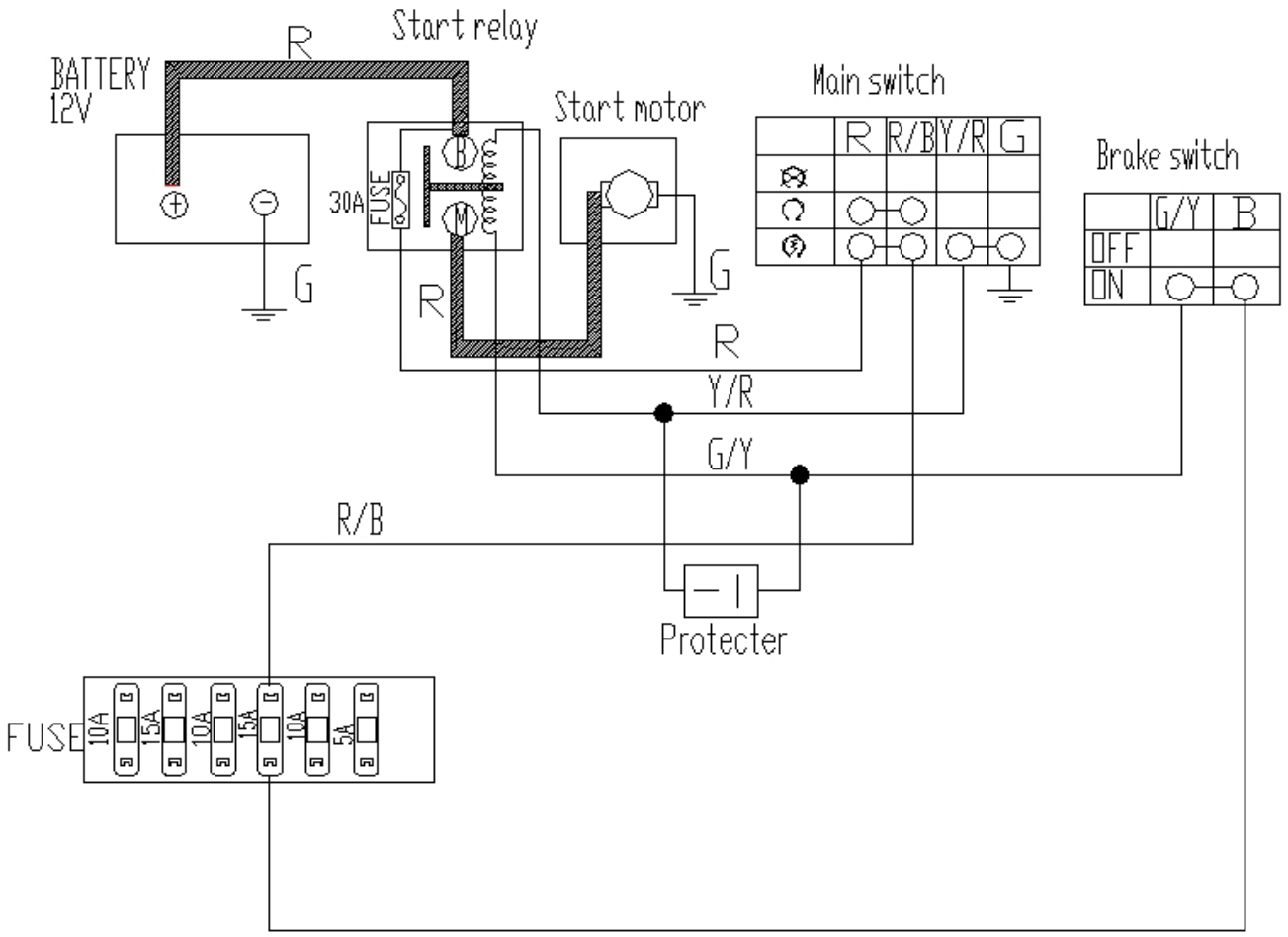

TROUBLESHOOTING

THE STARTER MOTOR OPERATES WHEN THE BRAKE SWITCH IS ON

IF THE STARTER MOTOR FAILS TO OPERATE

Procedure

Check:

1. Fuse (Main)
2. Battery
3. starter motor
4. starter relay
5. main switch
6. brake switch
7. starter switch
8. wiring connection (entire starting system)

1. fuse
refer to "CHECKING SWITCHES" section

NO CONTINUITY → Replace the fuse

2. Battery
Check the battery condition.
Refer to "BATTERY INSPECTION"

INCORRECT → Clean battery terminals
Recharge or replace the battery

3. Starter motor
Connect the battery positive terminal and starter motor cable using a jumper lead.
Check the starter motor operation

DOES NOT MOVE → Repair or replace the starter motor

4.Starter relay

●Disconnect the relay unit coupler from the wire harness.

●Connect the pocket tester (Ωx1) and battery (12V) to the relay unit coupler terminals.

Battery (+) lead→
Green/Yellow terminal ①
Battery (-) lead→
Yellow/Red terminal ②

WARNING

A wire used as a jumper lead must have the equivalent capacity as that of the battery lead or more, otherwise it may burn.
This check is likely to produce sparks, so be sure that no flammable gas or fluid is in the vicinity

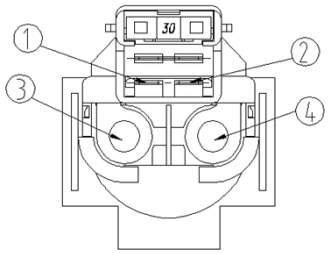

●Check the starter relay for continuity.

Test (+) lead → ③ terminal

Test (-) lead → ④ terminal

DOES NOT CONDUCTION

Replace the starter replay

CONTINUITY

4. Main switch

CHECK SWITCHES

NO CONTINUITY

Replace the main switch

1. Brake switch

CHECKING SWITCHES

NO CONTINUITY

Replace the brake switch

7. Starter switch

CHECKING SWITCHES

NO CONTINUITY

Replace the handlebar switch

8. Wiring connection

Check the connections of the entire starting system.

Refer to “CIRCUIT DIAGRAM

POOR CONNECTION

Correct

8.6 COOLING SYSTEM

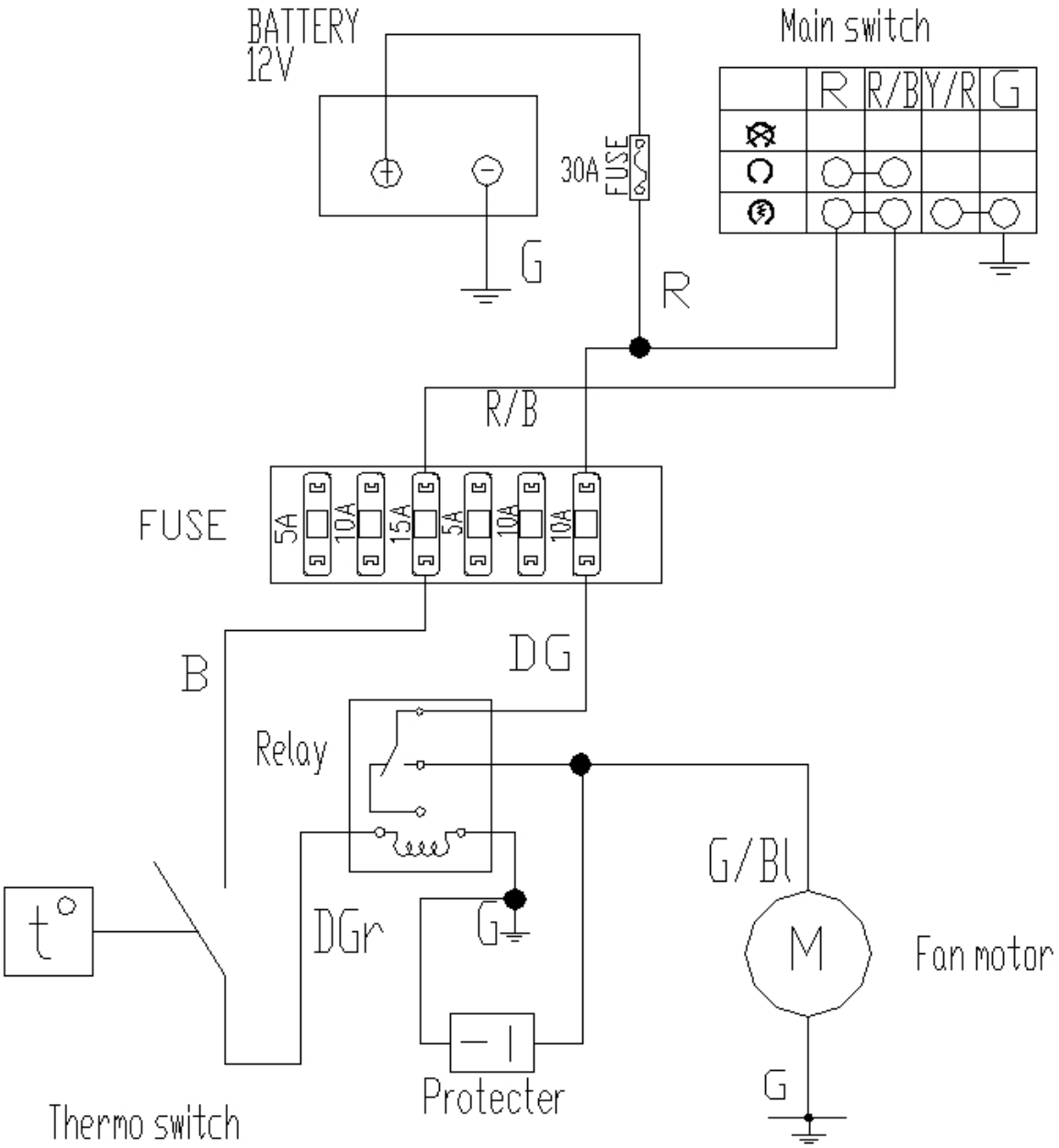

IF THE FAN MOTOR FAILS TO TURN

Procedure
Check:
1. Fuse (Main, Fan)
2. Battery
3. Main switch
4. Fan motor (inspection)
5. Thermo switch
6. Relay
7.Wiringconnection(entire cooling system)

1.Fuse
CHECK SWITCHES → NO CONTINUITY → Replace the fuse

2. Battery
Check the battery condition.
Refer to "BATTERY INSPECTION" section → INCORRECT → Clean battery terminals
Recharge or replace the battery

3 Main switch
CHECK SWITCHES → NO CONTINUITY → Replace the main switch

4.1 Fan motor(inspection 1)
Connect the battery to the fan motor.
Battery (+) lead→Green/Blue terminal ①
Battery (-) lead→Green ground ②
Check the fan motor operation → DOES NOT MOVE → Replace fan motor

1.2 Fan motor (inspection 2)
Turn the main switch to off.
- Remove the thermo switch lead from thermo switch.
- Connect the two wires of the thermo switch.
- Turn the main switch to on

DOES NOT MOVE

The wiring circuit from battery to fan motor is faulty. Repair

5. Thermo switch
Remove the thermo switch from the radiator.
- Connect the pocket tester (ΩX1) to the thermo switch①.
- Immerse the thermo switch in the water ②
- Check the thermo switch for continuity.

NOTE:
Measure temperatures while heating the coolant with the temperature gauge

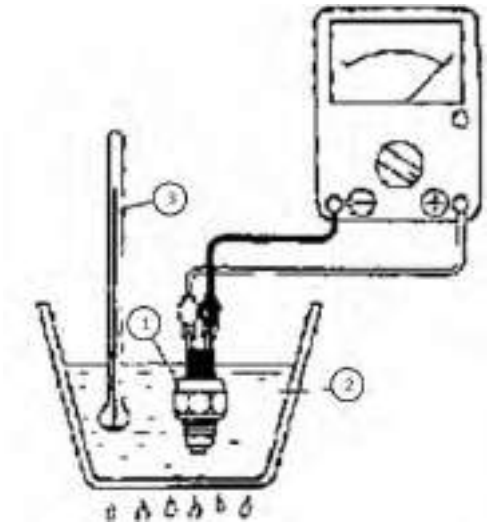

WARNING
- Handle the thermo switch with special care.
  Never subject it to strong shocks or allow it to be dropped. Should it be dropped, it must be replaced.
- Do not touch the thermo switch to the bottom of the heated vessel.

88±3℃Thermo switch "ON"
80±3 ℃Thermo switch "OFF"

OUT OF SPECIFICATION

Replace the thermo switch

6.Relay

●Disconnect the starting circuit cut-off relay coupler from the wire harness.

●Connect the pocket tester (Ωx1) and battery (12V) to the starting circuit cut-off relay coupler terminals.

Battery (+) lead→ terminal ②
Battery (-) lead→ terminal ④

●Check the starting circuit cut-off relay for continuity.

Test (+) lead → ① terminal
Test (-) lead → ③ terminal

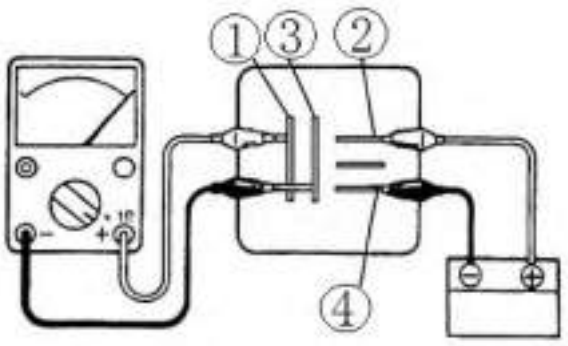

7.Wring connection

●Check the connection of the entire cooling system.

Refer to “CIRCUIT DIAGRAM”

UPPER CONNECTION

Correct

IF THE HEAT ALARM UNIT WORKING

When the main switch is turned on, the temperature of the engine begins to go up. As it comes to 88±3℃ the thermostat is connected and the fan starts to work, cooling the coolant, if the thermostat or the fan, fails to work; the coolant temperature will keep rising. The heat alarm unit operates the moment the temperature reaches 115±5℃and the signal flashing. Stop the engine now to have the circuit fixed.

Procedure

Check:

1 .Fuse(Main, Fan)
2. Battery
3. Main switch
4. Thermo unit
5. Voltage
6. Wiring connection (entire cooling system)

1. fuse

CHECKING SWITCHES

NO CONTINUITY

Replace the fuse

2. Battery

Check the battery condition.

Refer to "BATTERY INSPECTION"

INCORRECT

Clean battery terminals

Recharge or replace the battery

3.Main switch
CHECKING SWITCHES

NO CONTINUITY

Replace the main switch

4.Thermo unit
●Drain the coolant and remove the thermo unit from the cylinder head.
●Immerse the thermo unit ②in the coolant③ .
①Thermometer.

Handle the thermo unit with special care.
Never subject it to strong shocks or allow it to be dropped.
Should it be dropped, it must be replaced.
Do not touch the thermo unit to the bottom of the heated vessel.

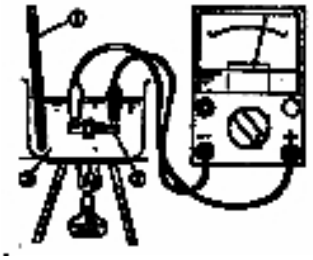

Coolant temperature	Resistance
80℃	47.5~56.8Ω
100℃	26.2~29.3Ω

OUT OF SPECIFICATION

Replace the thermo unit

MEETS SPECIFICATION

5.Voltage
●Connect the pocket tester (DC20V) to the Temperature gauge couple.
Tester (+) lead→Green/Blue terminal
Tester (-) lead→Green ground
●Turn the main switch to on.
●Check for voltage (12V) on the temperature gauge lead.

OUT OF SPECIFICATION

The wiring circuit from main switch to temperature gauge is faulty. Repair.

6.Wiring connection check the connections of the entire cooling system.
Refer to “CIRCUIT DIAGRAM”

POOR CONNECTION

CORRECT

Replace the temperature gauge

8.7 LIGHTING SYSTEM

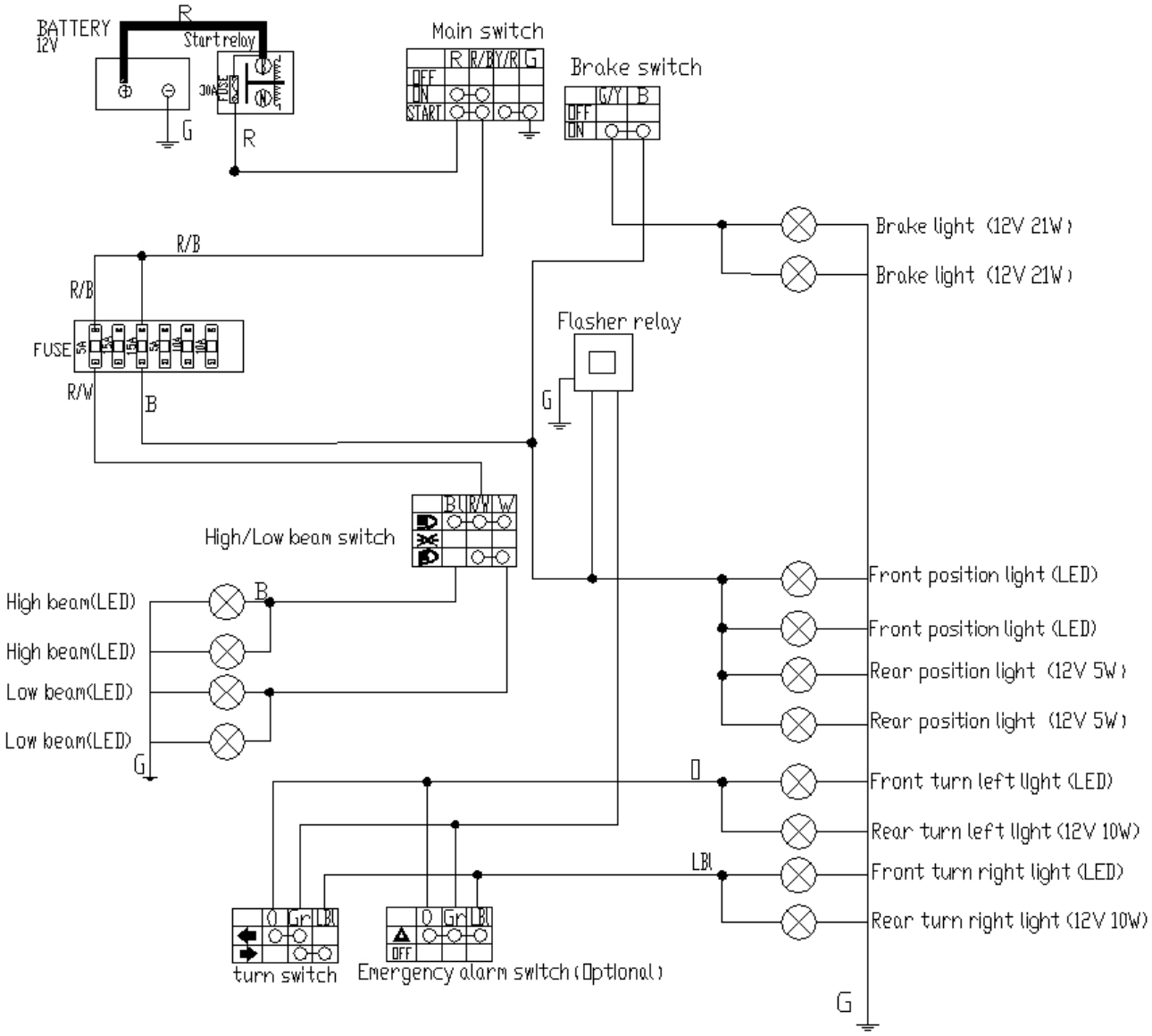

TROUBLESHOOTING

Procedure

Check:

1. Fuse (Main)
2. Battery
3. Main switch
4. High/low beam switch and turn switch
5. Flasher relay
6. Wiring connection (entire lighting system)

1.fuse
refer to "CHECKING SWITCHES" section

NO CONTINUITY → Replace the fuse

2. Battery
Check the battery condition.
Refer to "BATTERY INSPECTION" section

INCORRECT → Clean battery terminals
Recharge or replace the battery

3. Main switch
CHECK SWITCHES

NO CONTINUITY → Replace the main switch

4.High/low beam switch and turn switch
CHECK SWITCHES

NO CONTINUITY → Replace the switch

5. Flasher relay
Check flasher relay

NO CONTINUITY → Replace flasher relay

6.Wiring connection

Check the connection of the entire lighting system

POOR CONNECTIONS

correct

check the condition of each of the lighting system's circuits

Refer to "LIGHTING SYSTEM CHECK"

LIGHT SYSTEM CHECK

1. If the high/low beam light and direction indicator fail to come on

1.Blub and bulb socket CHECK

NO CONTINUITY

Replace the bulb and/ or bulb socket

2. Voltage

Connect the pocket tester (DC20V) to the high/low beam light and direction indicator light couplers.

A When the High/low beam switch is on high beam
High beam light:
Tester (+) lead →Blue lead
Tester negative (-) lead →Green lead

B When the High/low beam switch on low beam
Low beam light:
Tester (+) lead →White lead
Tester negative (-) lead →Green lead

C When the High/low beam switch on position light
Front/rear position light:
Tester (+) lead →Black lead
Tester negative (-) lead →Green lead

D When the turn switch on turn right position
Front/rear turn right light(LED)
Tester (+) lead →Light Blue lead
Tester negative (-) lead →Green lead

E When the turn switch on turn left position

OUT OF SPECIFICATION

The wiring circuit from the main switch to bulb socket connector is faulty. Repair

Front/rear turn left light(LED)
Tester (+) lead →Orange lead
Tester negative (-) lead →Green lead

Check for voltage (12V) on the lead at bulb socket connectors

This circuit is not faulty
Replace the bulb.
If the light is LED,replace the light directly

2. the taillight fails to come on

1. Bulb and bulb socket CHECK CONTINUITY		NO CONTINUITY Replace the bulb and /or bulb socket
2. Voltage Connect the pocket tester (DC20V) to the taillight couplers. 2.1 position light **Tester (+) lead→ Black terminal** **Tester (-) lead→ Green terminal** Turn the main switch to on. Check the voltage (12V) on the taillight couplers 2.2 brake light **Tester (+) lead→ Green/Yellow terminal** **Tester (-) lead→ Green terminal** Turn the main switch to on. Step on brake. Check the voltage (12V) on the taillight couplers CONTINUITY This circuit is not faulty. Replace the light.		OUT OF SPECIFICATION The wiring circuit from main switch to taillight connector is faulty. Repair.

8.8 GEAR POSITION INDICATOR SWITCH TEST

Switch table

High /Neutral/Reverse Switch

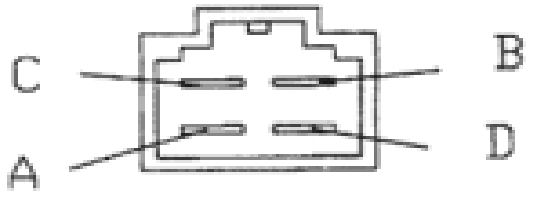

Low/Neutral/Switch

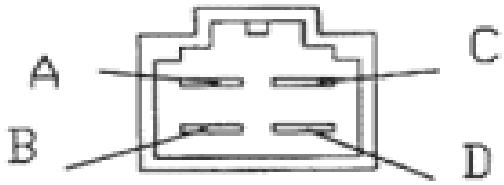

	D	A	B	C
High Range	●		●	
Reverse	●	●		
Neutral	●			●
Low Range	●			●

	D	C	B	A
	●	●		
	●	●		
	●	●		
	●		●	

This sensor is used to provide the gear position signal for meter display .

When the gearbox is in one gear position, there is continuity between this terminal and engine，otherwise no continuity.

Switch schematic

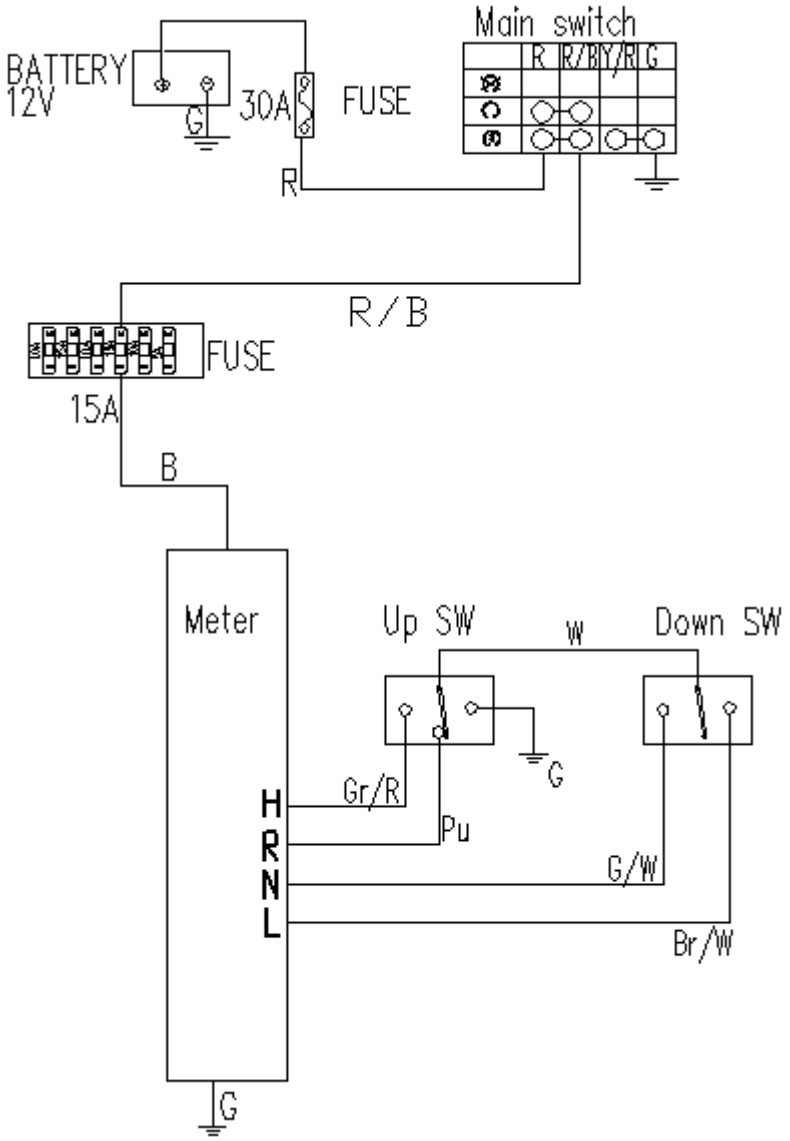

8.9 SPEEDMETER SYSTEM

OPERATION OF SPPED SENSOR

Speed Sensor is on the gearbox

Operation Instructions of LCD Meter and Speed Sensor

1. Ground Power DC 5V(+)
2. Ground
3. Output voltage signal

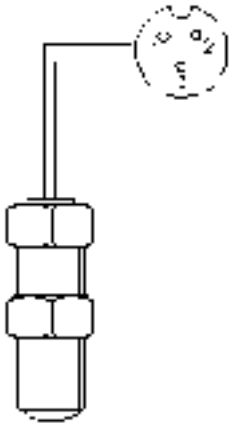

A. Hall Sensor is a new type sensor used to measure speed, angle, revolution and length, etc by means of voltage pulse signals converted from sensing gear ratio of black metal gear or gear rack.

B. Main Technical Parameter for sensor：

Item	Code	Vol value	Unit
Operating voltage	Vcc	5-20	V
Operating current	Icc	≤15	mA
Low voltage output	Vol	≤ 0.4	V
Hight voltage output	Voh	≥ (Vcc-1)	V
Operating distance	D	1mm ≤ D ≤ 2.5mm	mm

C. The following is the graphic illustration for sensor installation.

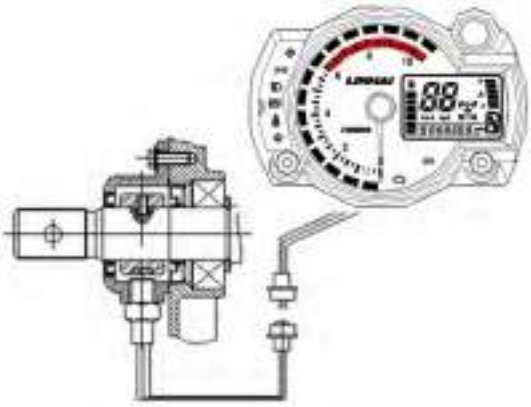

Note: Always screw in the sensor by hand when installation or adjustment.

1, Align one tooth of the splines to the centre of the hole of the sensor by turning the rear axle.

2. Screw the senor in (CW) by hand slightly until resistance is felt.

3. Turn the sensor CCW by 1 to 2 turn(s).

4. Tighten the jam nut.

LCD METER

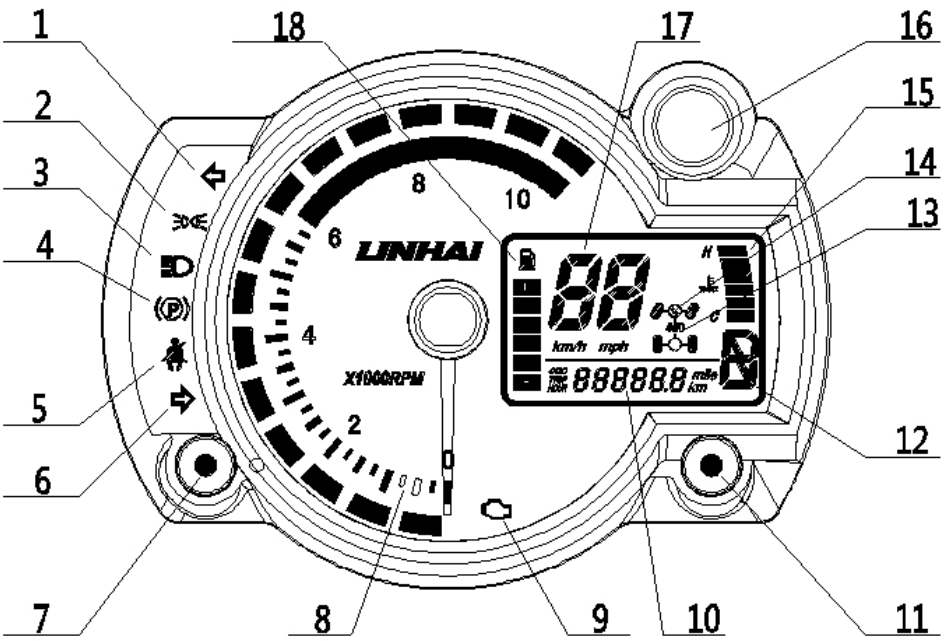

1. Turn Left Indicator Light	10. The Odometer and Engine Working Hour Counter
2. Position Lamp Indicator	11. Km/ Mile Selector
3. High Beam Indicator Light	12. Gear Position Indicator
4. Parking Brake Indicate Lamp	13. 2WD/4WD Indicator
5. Safety Belt Lamp	14.Front Differential Lock Indicator
6. Turn Right Indicator Light	15. Coolant Temperature Meter
7. ODO/TRIP/ Engine Working Hour Selector	16. Dome Lamp Indicator
8. Engine RPM Meter	17. Speedometer
9. MIL Indicator	18. Fuel gauge Indicator

8.10 MAIN SWITCH AND HANDLE SWITCH

Main switch

	R	R/B	Y/R	G
	○	○		
	○	○	○	○

2WD/4WD/LOCK switch

	Red button	Yellow button	Gr/W	Bl/G	Br/R	Br/G	Bl/B	Br/Y	G
2WD	⊔	⊔	○	○	○				
4WD	⊔	⊔	○	○		○	○		
LOCK	⊔	⊓			○	○	○	○	○

High/Low beam switch

	Bl	R/W	W
	○	○	○
		○	○

turn switch

	□	Gr	LBl
←	○	○	
→		○	○

Optional

Horn Button

ON	○	○
OFF		

Emergency alarm switch

	□	Gr	LBl
△	○	○	○
OFF			

8.11 FUEL GAUGE/ FUEL LEVEL SENSOR

EFI

Remove seat, and then remove fuel sensor attached to fuel tank	
Hold fuel sensor in an upright position after removing it. It is normal if indicator shows " E ", otherwise, circuitry connection, fuel sensor or instrument should be inspected	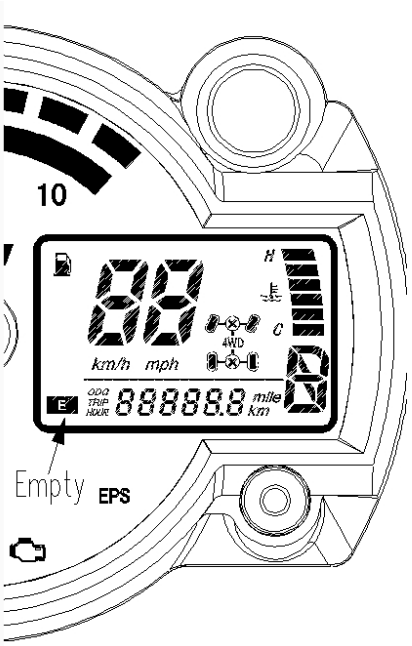
Turn fuel sensor upside down. It is normal if indicator shows " F ", otherwise, circuitry connection, fuel sensor or instrument should be inspected	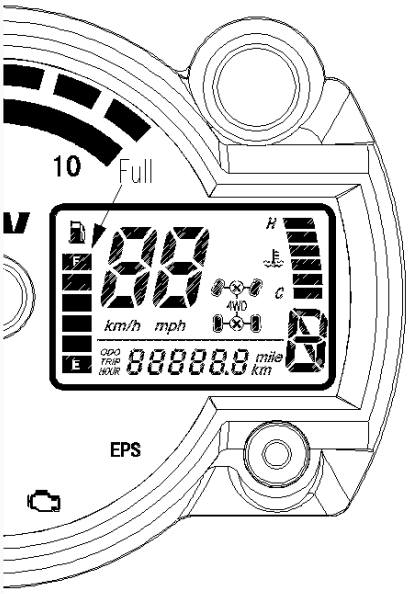

Fuel sensor resistance range

FLOAT POSITION	RESISTANCE(20℃/68° F)
TOP(FULL)	＜16Ω
BOTTOM(RESERVE)	＞100Ω

8.12 THE OPERATION PRINCIPLE OF THE ELECTRIC 4WD SHIFT

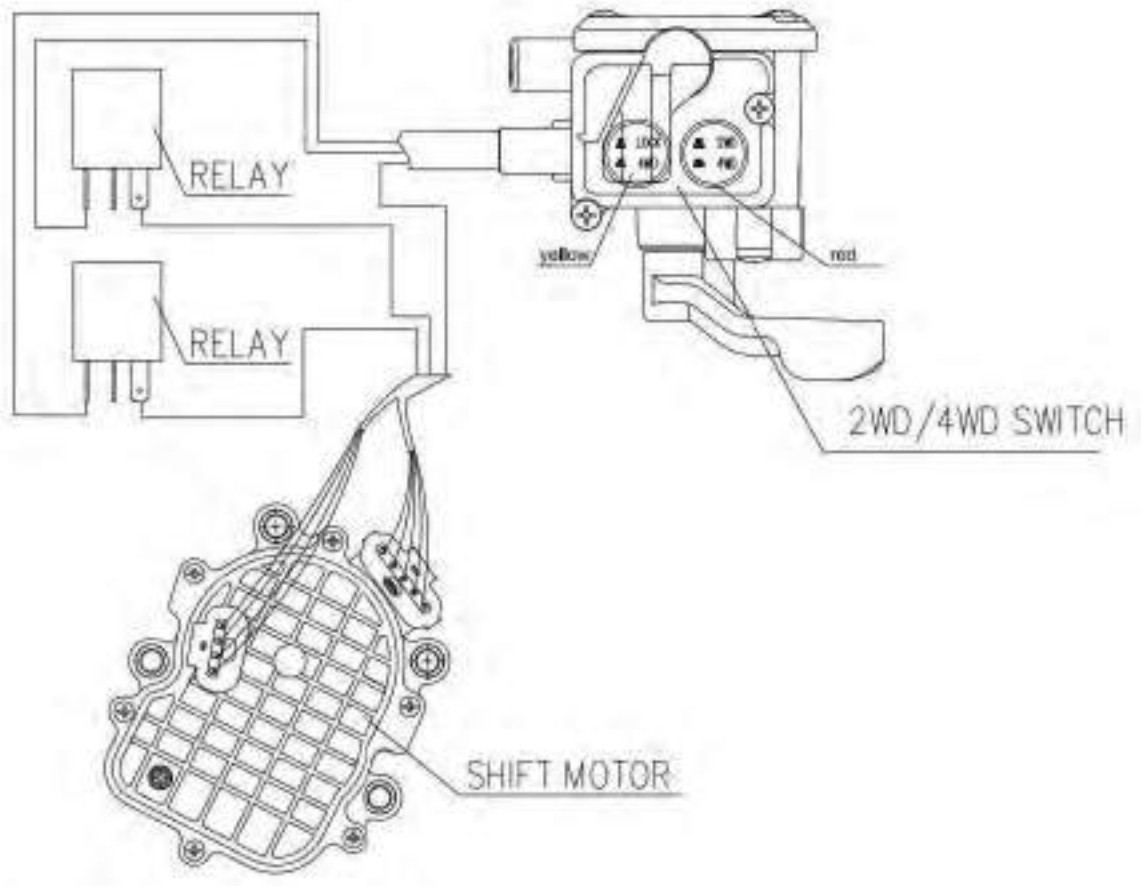

1, The rider shifts 2WD to 4WD by the Switch on panel.
2. When shift 2WD/ 4WD or Diff Lock, the mechanics in the front gear box maybe still engaged/ disengaged, the mechanics would finally disengaged/ engaged when rides on a hard surface or rides in reverse.
3. Always shift as the vehicle stop.

8.13 WIRING DIAGRAM